WHITMAN COUNTY PUBLIC WORKS
SMALL WORKS WORKSHEET

PROJECT NAME: **Guardrail, Flared Terminals, Transitions and Posts.**

1. **Sand Road #9060 Bridge @ m.p. 4.21**
2. **Sand Road #9060 Bridge @ m.p. 5.02**

DESCRIPTION: Bridge @ 4.21 will be started in early June and complete in late July. Whitman County will install posts and Thrie Beam on Bridges. (Whitman County would like to pick up theThrie Beam and posts when available). See Complete Detail Attachments.

All materials, equipment, labor and tax costs should be included in the quote. All contractors shall be bonded and must pay State Prevailing Wage Rate for labor except for fabrication. A contract bond will be required. (Please initial your acknowledgement of these requirements: (_____).

All work must be completed by: **September 1st, 2016**

QUOTES MUST BE RETURNED BY: **June 9th, 2016 at 5:00 p.m.**

Contact: **Phil Meyer – Ext. 5203** **Phil.Meyer@co.whitman.wa.us**

Whitman County Public Works: (509) 397-4622 FAX (509) 397-6210.

(Anticipated award date: June 13th, 2016.)

BASIS OF AWARD: **$**_____

Tax **$**_____

Total: **$**_____

Company Name: _____

Signature: _____

Printed Name: _____

Address: _____

Phone: _____ FAX: _____

Email: _____

Bid Closed. For Review Only

Bid Item	Unit	Location				Totals
		9060-04.21	Notes	9060-05.02	Notes	
Furnish Thrie Beam Guardrail Element Standard Plan C-1a	L.F.	112.5	8 Typical Rail Elements & 2 Half Sections	62.5	4 Typical Rail Elements & 2 Half Sections	175
Furnish W6x20x33" Galvanized Guardrail Post with Base Plate, Including Hardware	Each	20	Must Include all hardware for attachment to the structure and attaching Thrie Beam Guardrail Elements			20
Furnish & Install Beam Guardrail Type 1A Standard Plans C-1 & C-2p Case 22-AC	L.F.	12.5	1 Typical Rail Element @ 8.25' Rad.			12.5
Furnish & Install Beam Guardrail Anchor Type 1 Standard Plans C-6 & C-2p Case 22-AC	Each	1				1
Furnish & Install Beam Guardrail Transition Section Type 12 Standard Plans C-3b	Each	4				4
Furnish & Install Beam Guardrail Transition Section Type 6 Standard Plans C-2h & C-3a	Each			3	For Service Level 1 Weak Post Bridge Rail System.	3
Furnish & Install Thrie Beam Reducer Section Type B Standard Plans C-1d & C-2h	Each			4	For Service Level 1 Weak Post Bridge Rail System.	4
Furnish & Install 50' Beam Guardrail Non-Flared Terminals Standard Plan C-4e	Each	3		3		6
Furnish & Install 25' Fleat TL2 Beam Guardrail Flared Terminals Standard Plan C-4b	Each			1	No Transition, Directly Attached to Reducer Section Type B	1

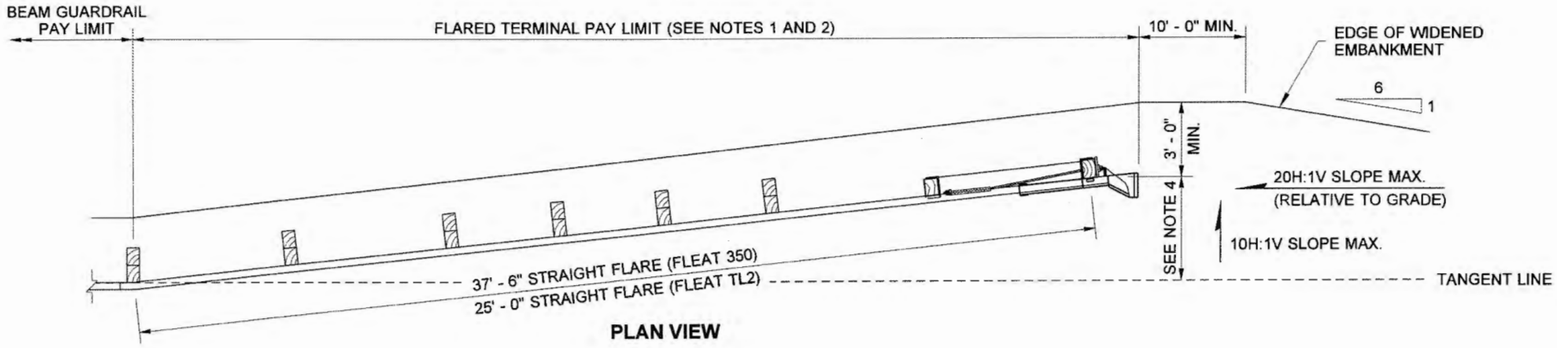

PLAN VIEW

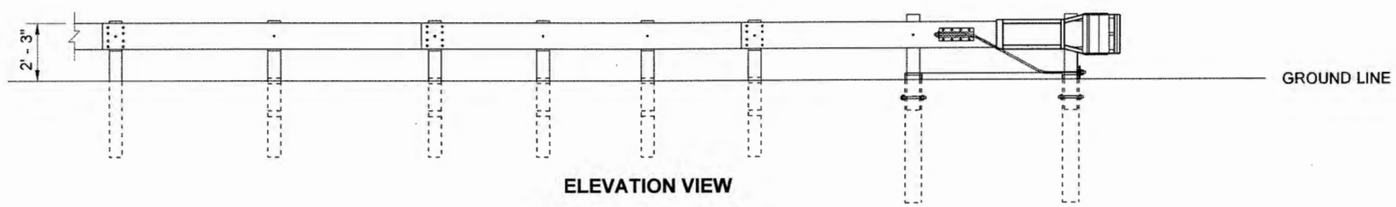

ELEVATION VIEW

FLEAT OPTION

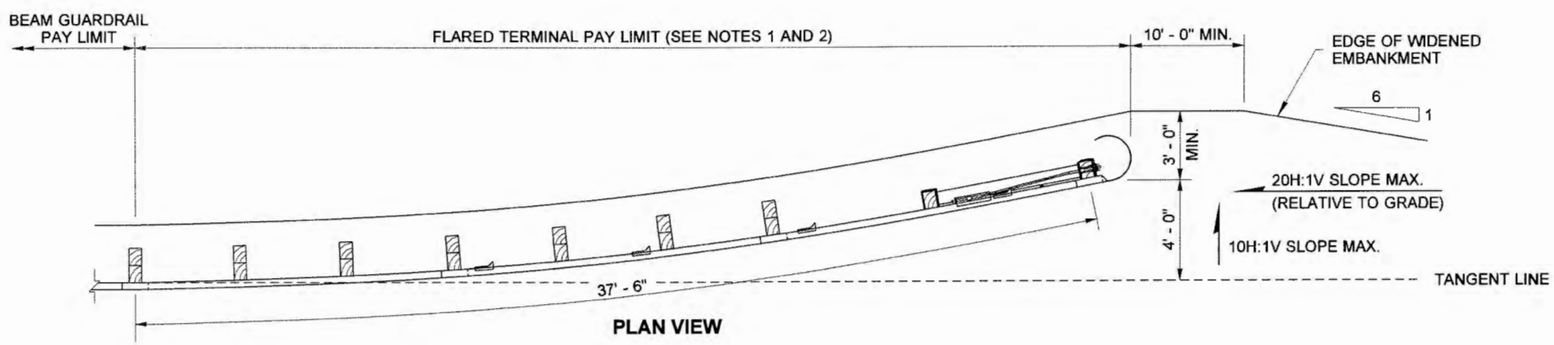

PLAN VIEW

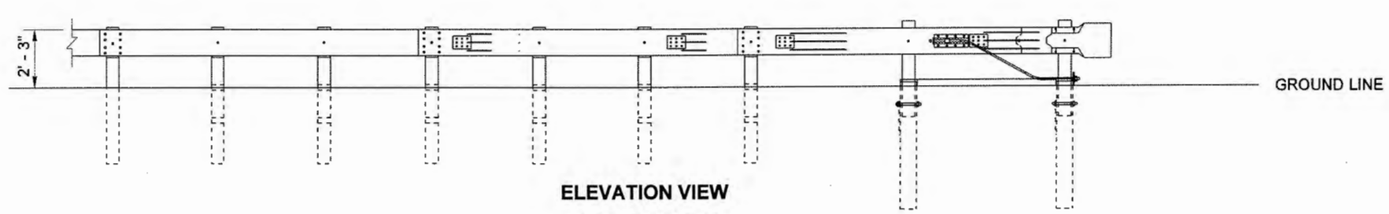

ELEVATION VIEW

SRT OPTION

NOTES

1. Unless otherwise indicated in the contract, the SRT - 350 (12.5, 8 Post) as manufactured by Trinity Industries, Inc., or a FLEAT 350 as manufactured by Road Systems Inc., shall be installed per manufacturer's recommendations. If specified in the Contract, the FLEAT TL2 as manufactured by Road Systems, Inc. shall be installed per manufacturers recommendations.

2. Where terminal is placed on a curve, and post offsets would result in the rail encroaching onto the shoulder (e.g., the inside of a curve), the posts shall be installed so that the faceof the rail is at the edge of the shoulder.

3. When snow load post washers and snow load rail washers are called for in the contract, the snow load rail washers must be omitted within the terminal limits.

4. Offset distances:

   FLEAT 350 ..... 4' - 0"

   FLEAT TL2 ..... 1' - 8" minimum

EXPIRES JULY 24, 2006

BEAM GUARDRAIL
FLARED TERMINAL

STANDARD PLAN C-4b

SHEET 1 OF 1 SHEET

APPROVED FOR PUBLICATION

6·8·06

STATE DESIGN ENGINEER — DATE

Washington State Department of Transportation

DATE	REVISION	BY
04/2006	Revised FLEAT Flare Lengths	AMC

DRAWN BY: COLBY FLETCHER

NOTES

1. An SKT-350 as manufactured by Road Systems, Inc. shall be installed according to manufacturer's recommendations. When a TL2 terminal is specified in the Contract an SKT-TL2 as manufactured by Road Systems, Inc. shall be installed according to the manufacturer's recommendations.
2. A reflectorized object marker shall be installed according to manufacturer's recommendations.
3. When snow load post washers and snow load rail washers are required by the Contract, the snow load rail wahsers must not be installed within the terminal limits.
4. Terminal shall be installed at a taper, ensuring that end piece is entirely off shoulder.
5. Length for SKT-350 is 50' (ft). Length for SKT-TL2 is 25' (ft).

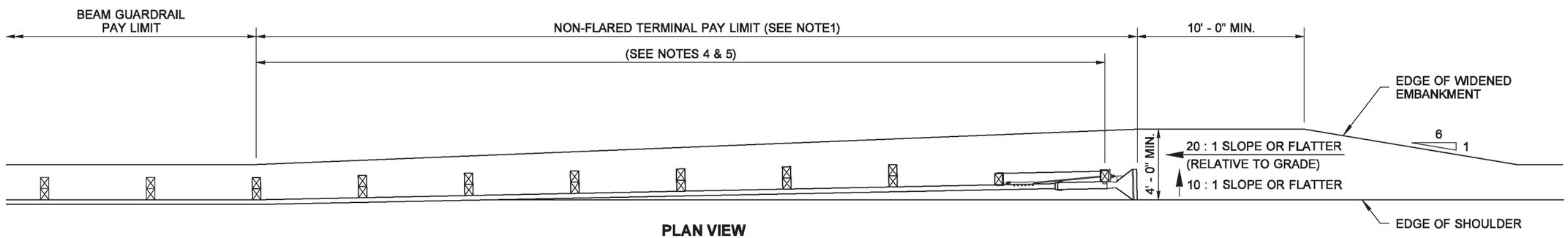

PLAN VIEW

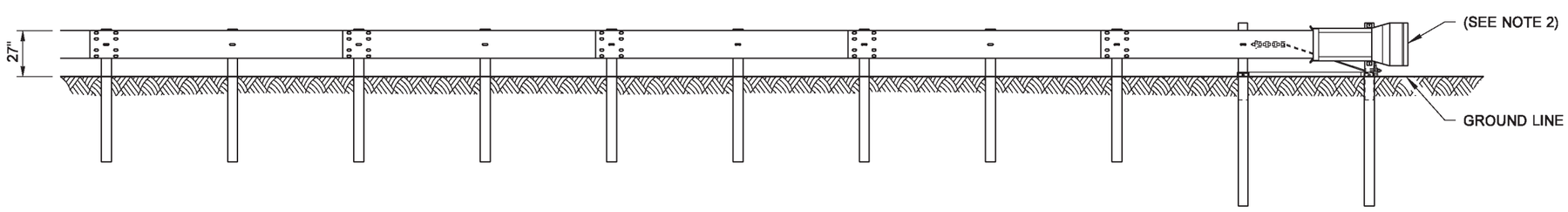

ELEVATION VIEW

Barry, Ed
Oct 23 2014 11:31 AM

BEAM GUARDRAIL NON-FLARED TERMINAL

STANDARD PLAN C-4e

SHEET 1 OF 1 SHEET

APPROVED FOR PUBLICATION
Bakotich, Pasco
Oct 23 2014 12:09 PM
STATE DESIGN ENGINEER

Washington State Department of Transportation

DATE	REVISION	BY
10/2014	REMOVED TRINITY NON-FLARED TERMINAL	CF

DRAWN BY: MARK SUJKA

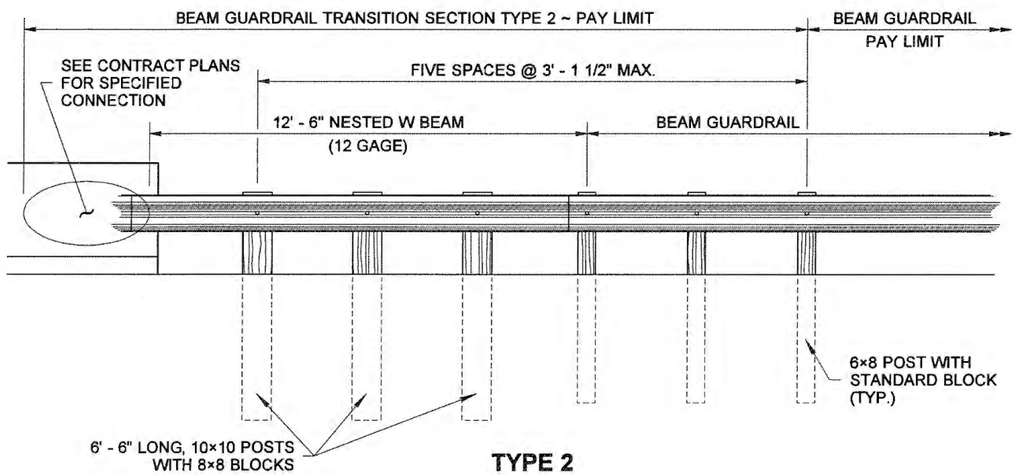

TYPE 2

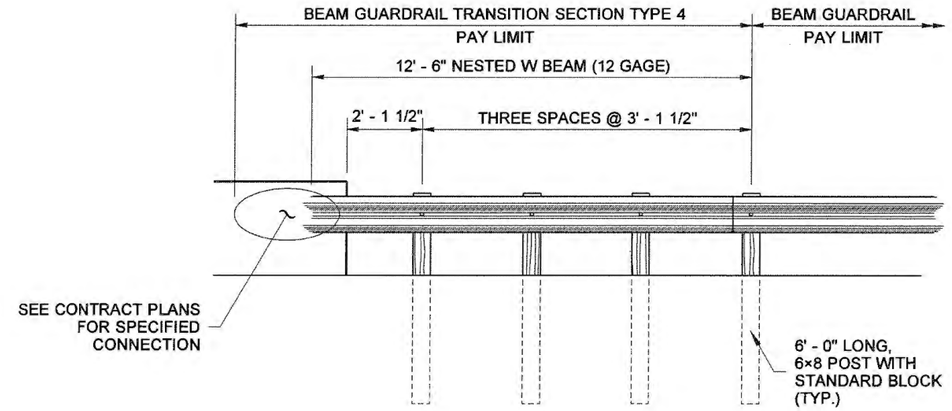

TYPE 4
FOR 45 MPH AND BELOW

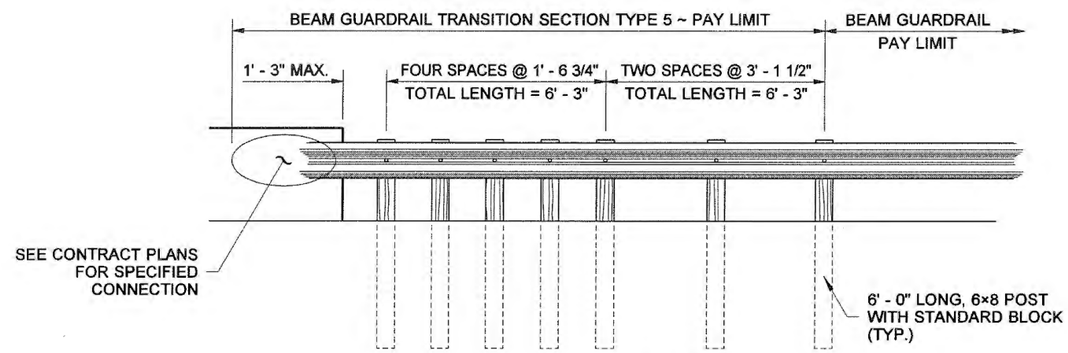

TYPE 5

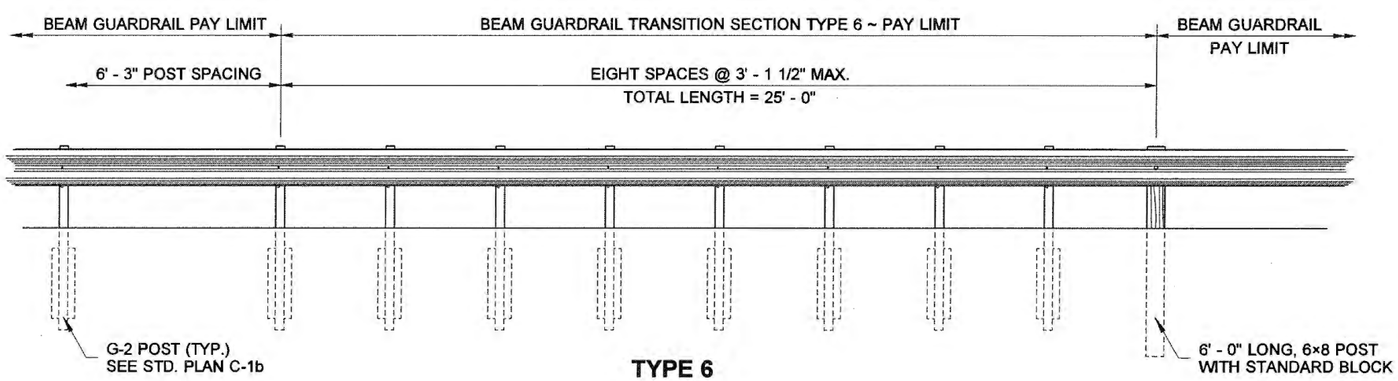

TYPE 6

EXPIRES JULY 24, 2006

BEAM GUARDRAIL TRANSITION SECTIONS

STANDARD PLAN C-3a

SHEET 1 OF 1 SHEET

APPROVED FOR PUBLICATION

Harold Fitzpatrick 10-4-05

STATE DESIGN ENGINEER — DATE

Washington State Department of Transportation

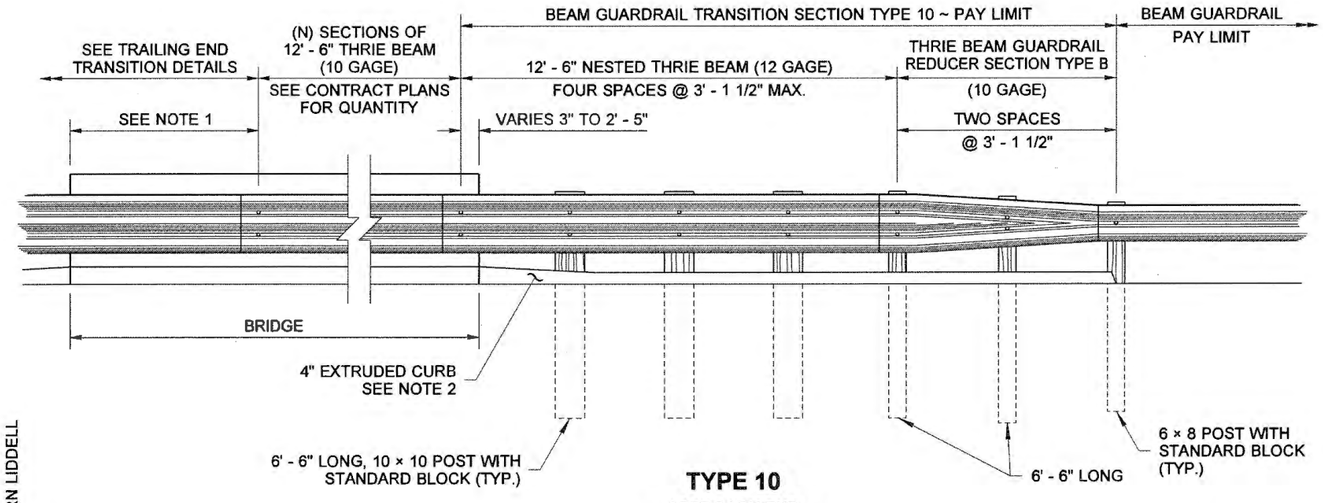

TYPE 10

APPROACH END

THRIE BEAM INSTALLED AT FACE OF BRIDGE CURB

NOTES

1. If the distance from the end of the bridge to the end of the thrie beam bridge rail section exceeds 6' - 3" using 12' - 6" thrie beam sections, add a 6' - 3" section of thrie beam bridge rail to reduce the length to less than 6' - 3".
2. When thrie beam is installed at the face of the bridge curb, install Extruded Curb at face of Guardrail. See **Standard Plan F-10.40** for details. Match the height of existing bridge curb with a 20H : 1V transition.
3. When thrie beam is installed at the face of rigid bridge rail, an HMA ramp is required from the roadway surface to the top of the bridge curb or sidewalk. The slope of the ramp shall be 20H : 1V or flatter.

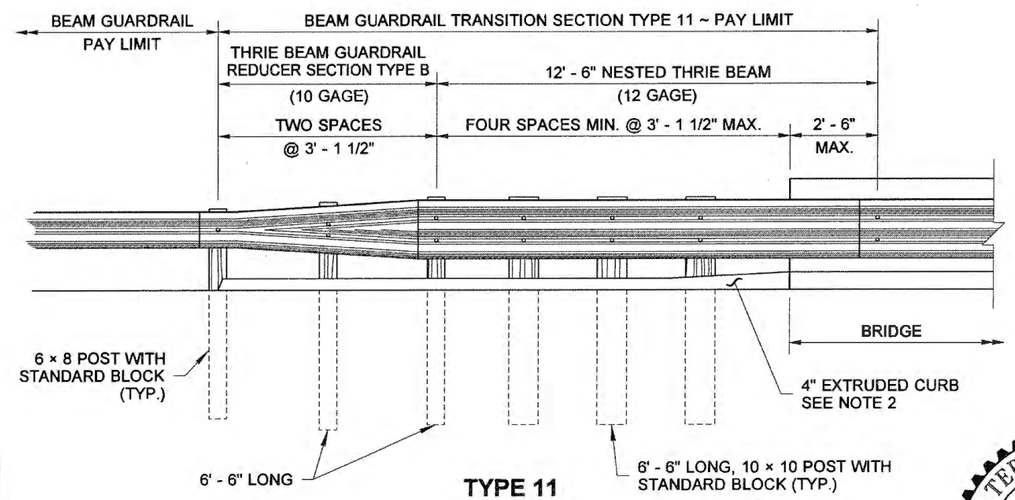

TYPE 11

TRAILING END

THRIE BEAM INSTALLED AT FACE OF BRIDGE CURB

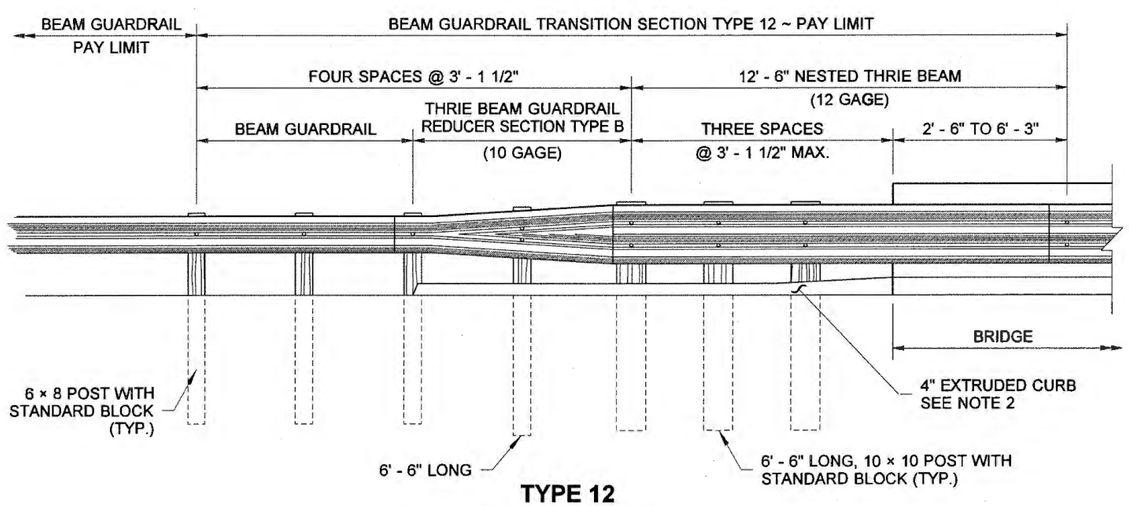

TYPE 12

TRAILING END

THRIE BEAM INSTALLED AT FACE OF BRIDGE CURB

DRAWN BY: FERN LIDDELL

BEAM GUARDRAIL TRANSITION SECTIONS

STANDARD PLAN C-3b

SHEET 1 OF 2 SHEETS

APPROVED FOR PUBLICATION

STATE DESIGN ENGINEER — DATE 6/27/11

Washington State Department of Transportation

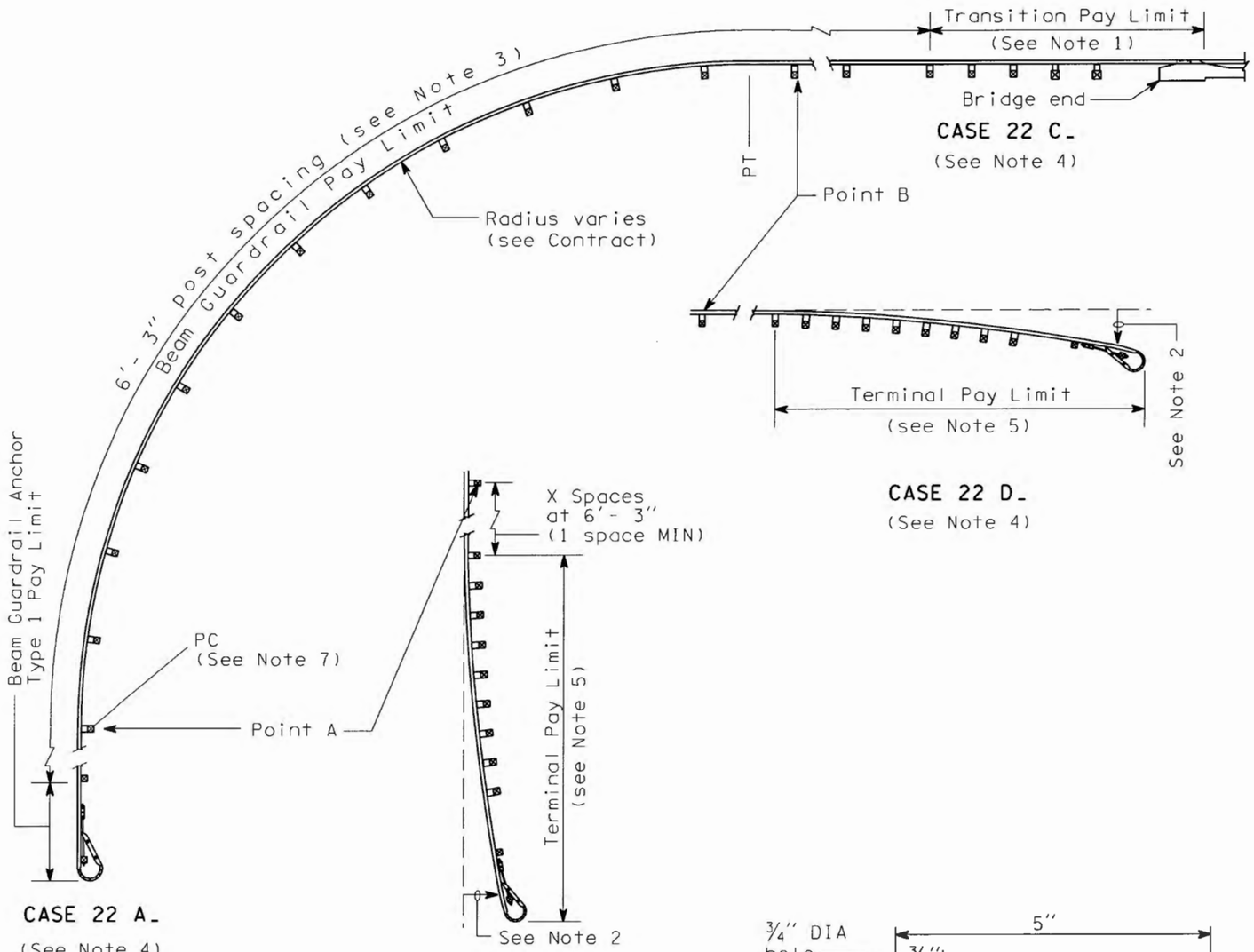

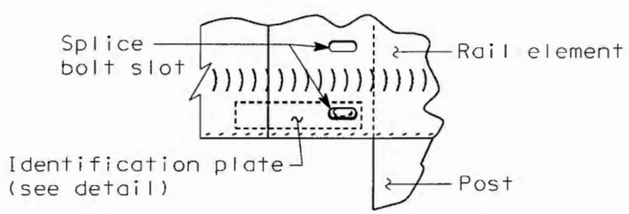

IDENTIFICATION PLATE MOUNTING DETAIL
(See Note 7)

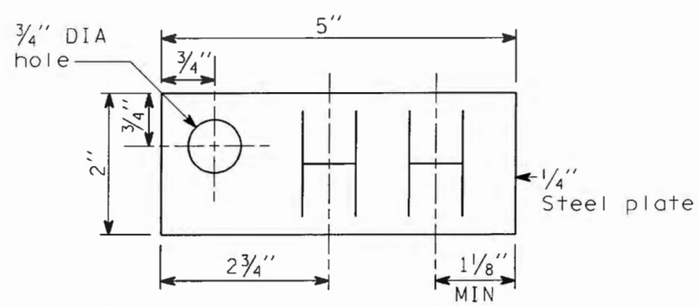

IDENTIFICATION PLATE DETAIL
(See Note 6)

NOTES

1. See Contract for transition and connection type.
2. The slope from the edge of the shoulder into the face of the guardrail should not be steeper than 10:1.
3. Guardrail installation shall be Beam Guardrail Type 1 with standard post and block.
4. First letter of case designation indicates end treatment on side road. Second letter indicates end treatment on main road. For instance a terminal on the side road and a bridge connection on the main road would be Case 22 BC.
5. For terminal type and details, see Contract and applicable Standard Plan(s).
6. Radius dimensions shall be etched into plate replacing the letters "HH" shown on the Identification Plate Detail. Digits shall be 1½" MIN height and ¾" MAX width. Plate shall be galvanized after etching.
7. The guardrail Identification Plate shall be mounted at the lower splice bolt on the back side of the rail element at the PC of the guardrail radius.

GUARDRAIL PLACEMENT
STRONG POST
INTERSECTION DESIGN
STANDARD PLAN C-2p

SHEET 1 OF 1 SHEET

APPROVED FOR PUBLICATION
STATE DESIGN ENGINEER — DATE 10·31·03

DATE	REVISION	BY
09/2003	CORRECTED REFERENCES TO NOTES.	MHG

Washington State Department of Transportation

NOTES

1. For Service Level 1, Weak Post Bridge Rail System, see Contract.
2. SRT Terminal shown. For Terminal type and details, see Contract and applicable Standard Plan(s).
3. The slope from the edge of the shoulder into the face of the guardrail should not be steeper than 10:1.
4. See Standard Plan "Beam Guardrail Posts and Blocks".

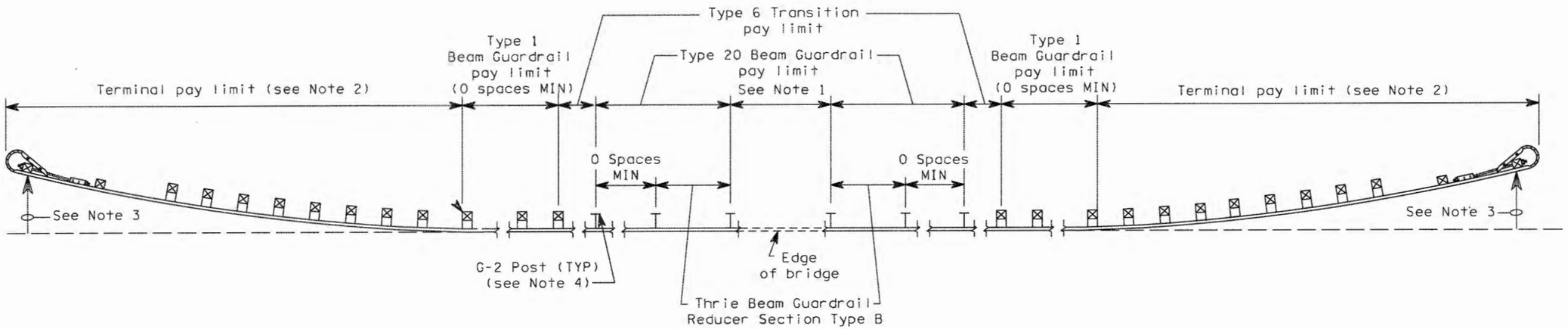

Direction of Traffic

CASE 14

GUARDRAIL PLACEMENT

STANDARD PLAN C-2h

APPROVED FOR PUBLICATION

3/28/97

STATE DESIGN ENGINEER — DATE

WASHINGTON STATE DEPARTMENT OF TRANSPORTATION
OLYMPIA, WASHINGTON

DRAWN BY: FERN LIDDELL

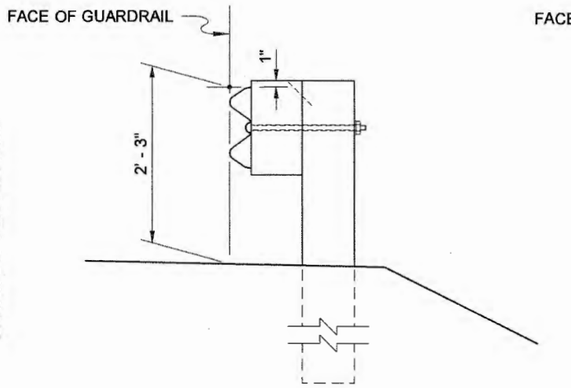

TYPE 1

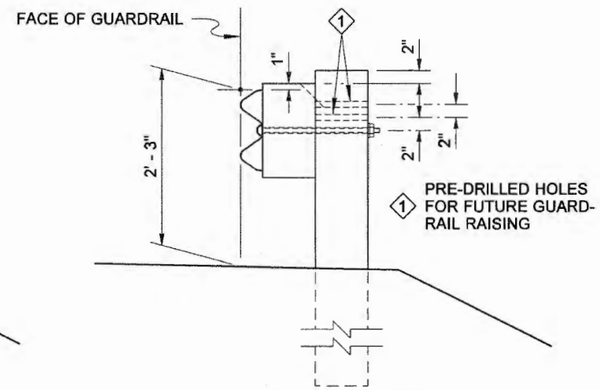

INITIAL INSTALLATION

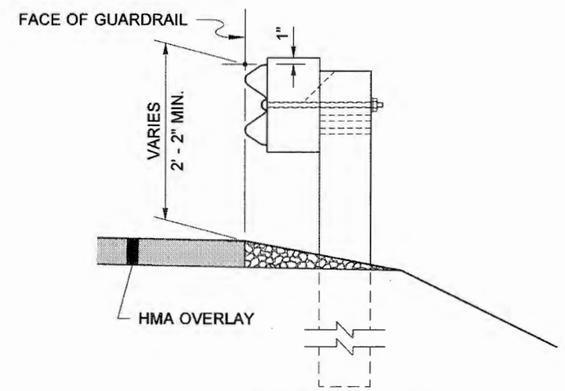

RAIL ELEMENT RAISED

TYPE 1 ALTERNATIVE

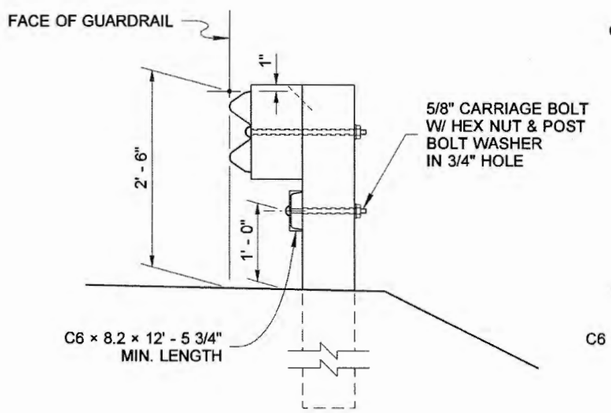

TYPE 2

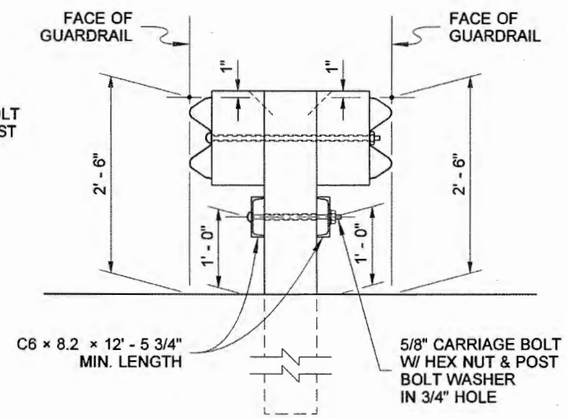

TYPE 3

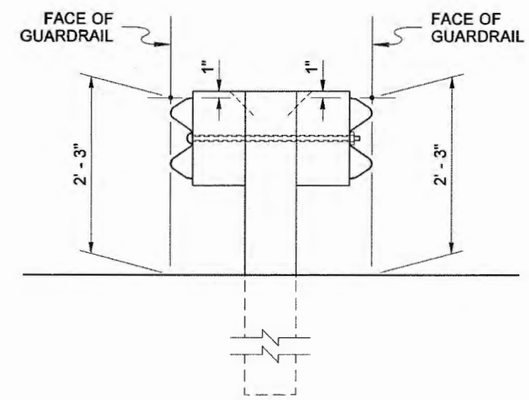

TYPE 4

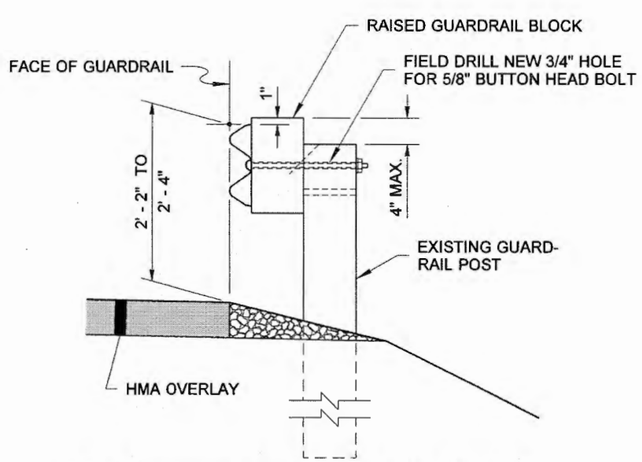

BEAM GUARDRAIL RAISING FOR HMA OVERLAYS

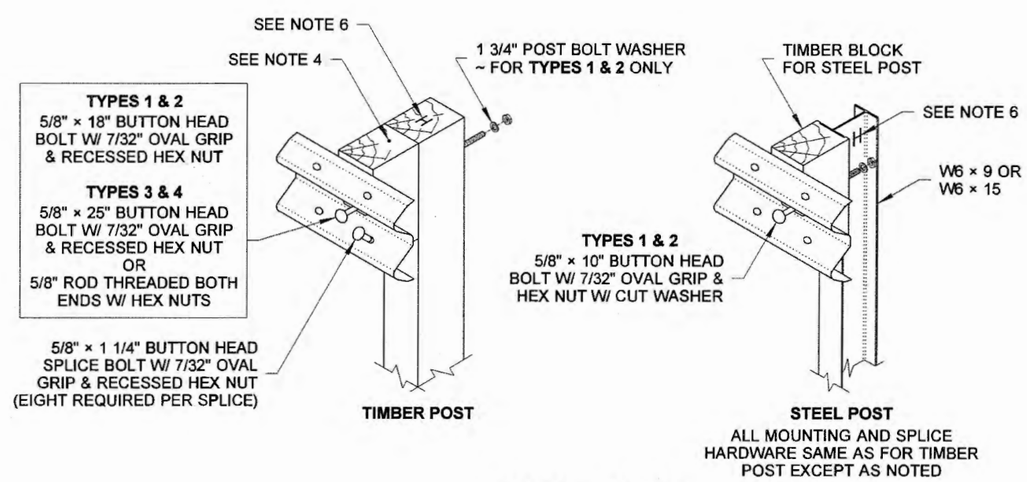

TIMBER POST

STEEL POST
ALL MOUNTING AND SPLICE HARDWARE SAME AS FOR TIMBER POST EXCEPT AS NOTED

ASSEMBLY DETAIL

NOTES

1. When required by the Contract, a Snow Load Post Washer shall be used on the backside of the post (in lieu of the 1 3/4" Post Bolt Washer) and a Snow Load Rail Washer shall be placed on the face side of Beam Guardrail Types 1 and 2. Snow Load Rail Washers shall not be installed on terminals.
2. Rail Washers, also called "Snow Load Rail Washers" are not required on new installation except as called for in Note 1. Unnecessary Rail washers need not be removed from existing installations, except those on posts 2 through 8 of a BCT installation shall be removed.
3. Beam Guardrail post spacing for Types 1 through 4 shall be 6' - 3" on centers.
4. Timber blocks shall be toe-nailed to the post with a16d galvanized nail to prevent block rotation.
5. For post and block details, see **Standard Plan C-1b**.
6. When "Beam Guardrail Type - ___ Ft. Long Post" is specified in the Contract, the post length shall be stamped with numbers, 1 1/2" min. high and 3/4" wide at the location where the letter "H" is shown in the ASSEMBLY DETAIL. For wood post applications, the letter shall be stamped to a minimum depth of 1/4". For steel post applications, the letter shall be legible after the post is galvanized. After post installation, it shall be the Contractor's responsibility to ensure that the stamped numbers remain visible.
7. Existing posts shall not be raised. Replace posts as necessary to achieve required guardrail height.

TERRY L. BERENDS
STATE OF WASHINGTON
32350
REGISTERED PROFESSIONAL ENGINEER

6-8-2011

BEAM GUARDRAIL TYPES 1 ~ 4 (W-BEAM) STANDARD PLAN C-1

SHEET 1 OF 2 SHEETS

APPROVED FOR PUBLICATION

Paco Bolotte 6/16/11
STATE DESIGN ENGINEER DATE

Washington State Department of Transportation

DRAWN BY: FERN LIDDELL

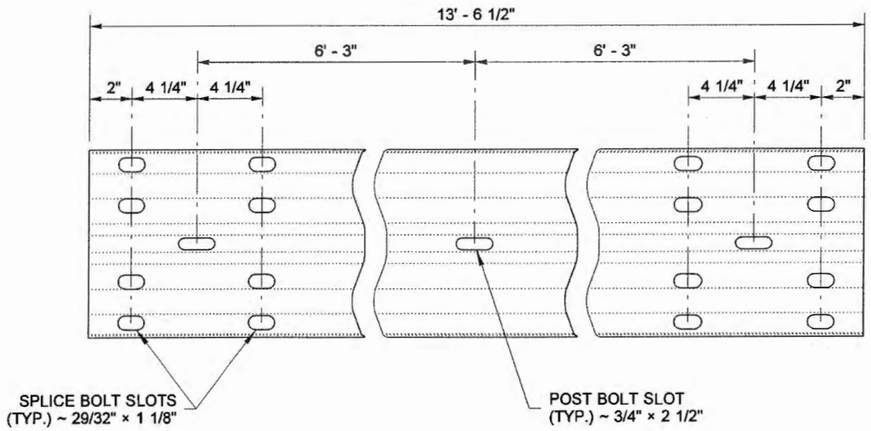

TYPICAL RAIL ELEMENT

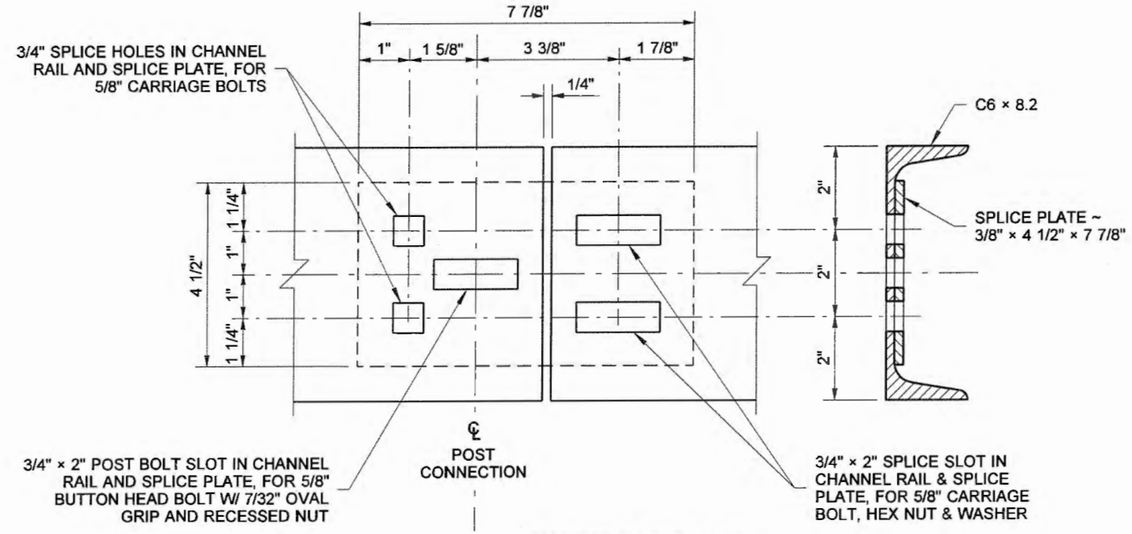

CHANNEL RAIL SPLICE

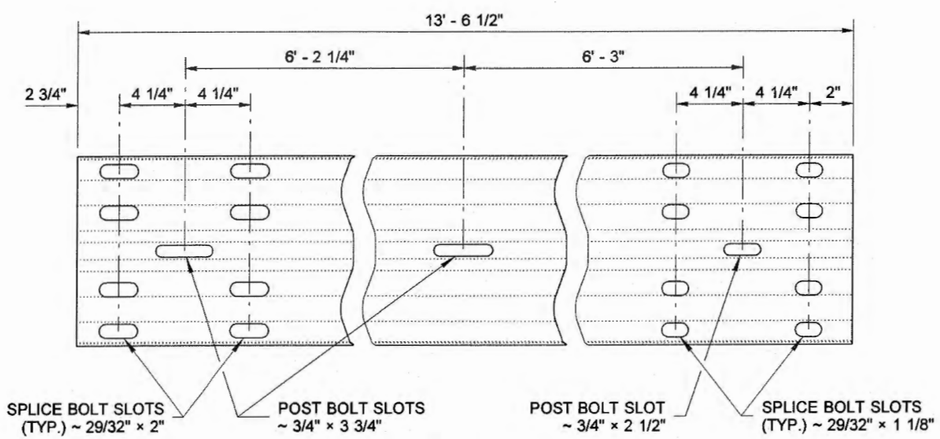

EXPANSION SECTION

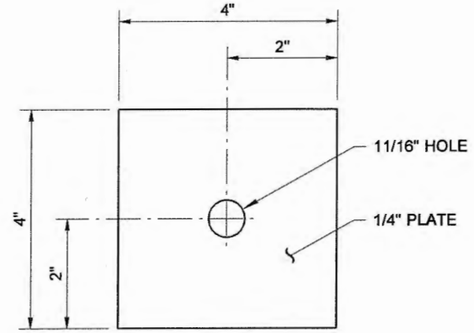

SNOW LOAD
POST WASHER
SEE NOTE 1

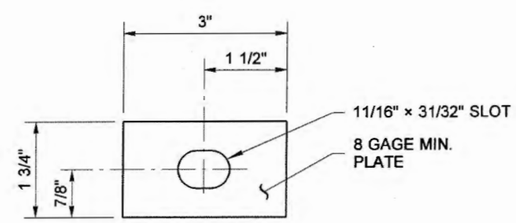

SNOW LOAD
RAIL WASHER
SEE NOTES 1 & 2

6-8-2011

BEAM GUARDRAIL
TYPES 1 ~ 4
(W-BEAM)
STANDARD PLAN C-1

SHEET 2 OF 2 SHEETS

APPROVED FOR PUBLICATION

STATE DESIGN ENGINEER — DATE 6/16/11

Washington State Department of Transportation

DRAWN BY: FERN LIDDELL

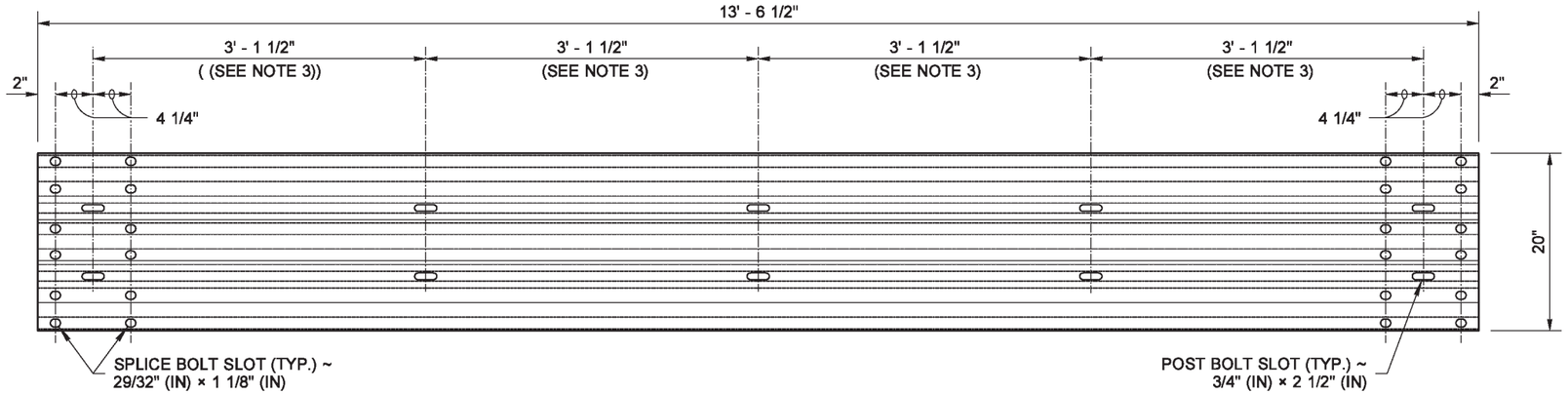

TYPICAL RAIL ELEMENT

NOTES

1. Type 10 post shall be 6 × 8 timber, OR either W6 × 9, or W6 × 8.5 steel. Type 11 post shall be 10 × 10 timber or W6 × 15. For additional details see **Standard Plan C-1b.**
2. Type 10 guardrail post spacing shall be 6' - 3" on center. Type 11 shall be a maximum of 3' - 1 1/2" on center.
3. Spacing may vary depending on application. See **Standard Specification Section 9-16.3(1)** for rail element requirements.

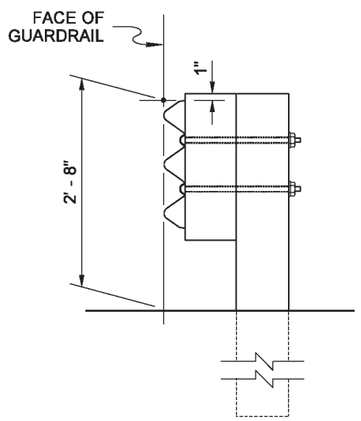

RAIL ASSEMBLY

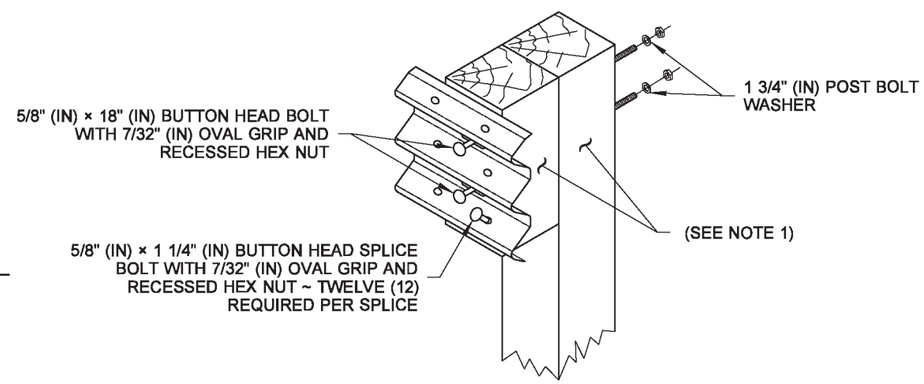

WOOD POST ASSEMBLY

TYPE 10

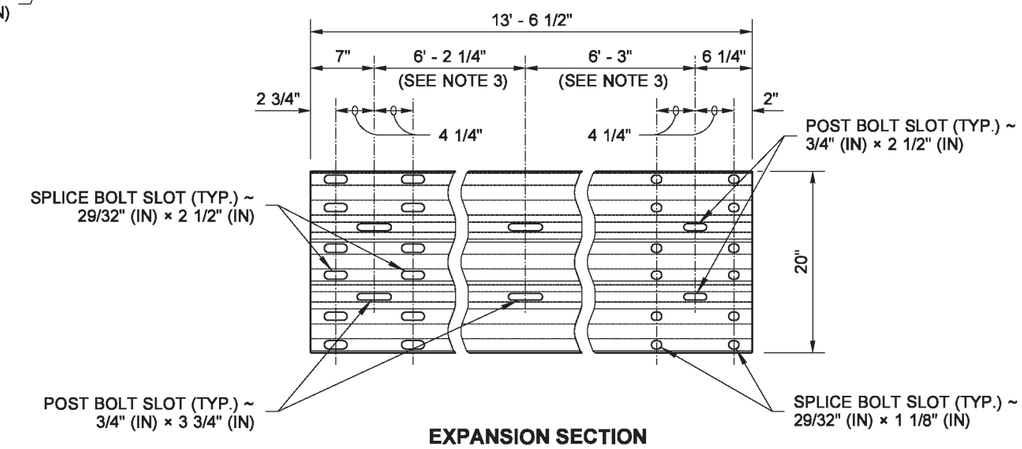

EXPANSION SECTION

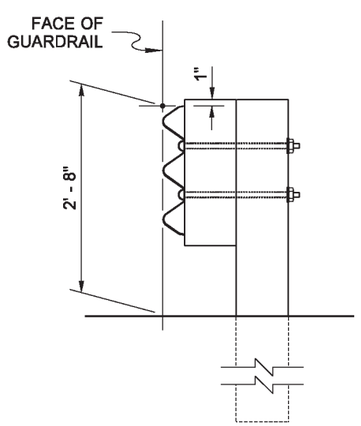

RAIL ASSEMBLY

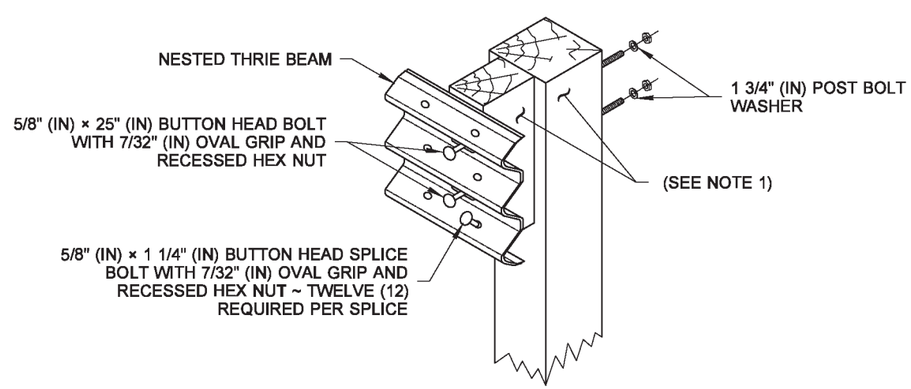

WOOD POST ASSEMBLY

TYPE 11

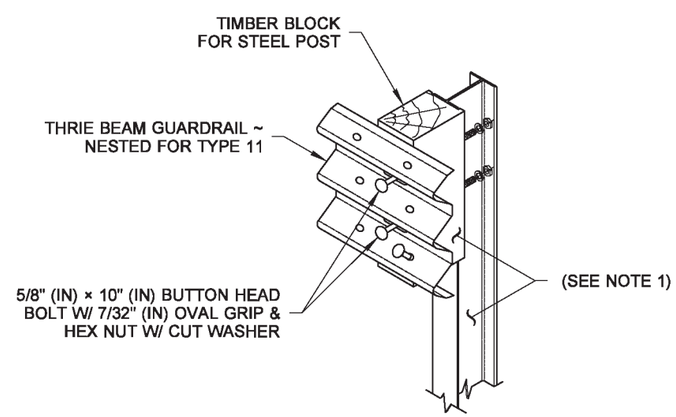

STEEL POST ASSEMBLY

TYPES 10 AND 11

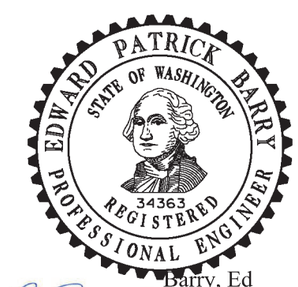

Barry, Ed
Jul 14 2015 7:07 AM

BEAM GUARDRAIL (THRIE BEAM)

STANDARD PLAN C-1a

SHEET 1 OF 1 SHEET

APPROVED FOR PUBLICATION
Carpenter, Jeff
Jul 14 2015 11:30 AM
STATE DESIGN ENGINEER

Washington State Department of Transportation

DRAWN BY: FERN LIDDELL

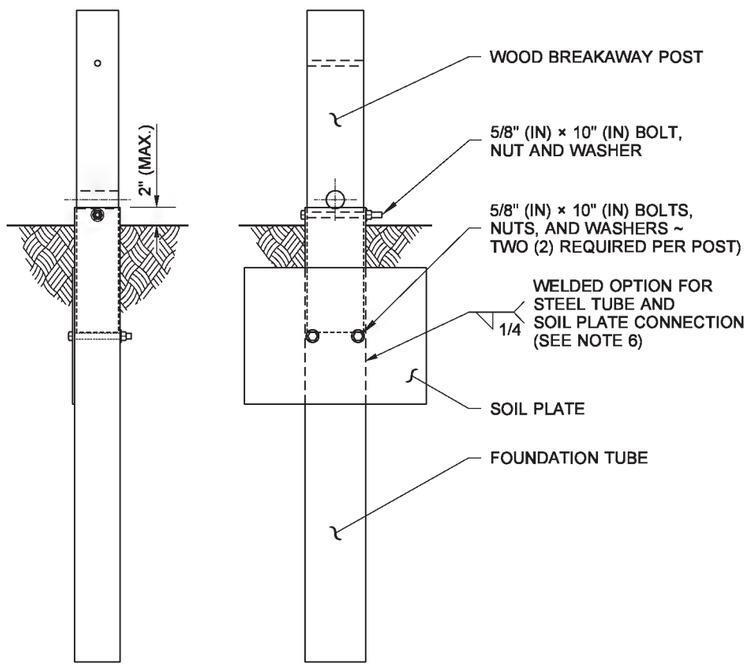

FRONT VIEW SIDE VIEW

ANCHOR POST ASSEMBLY

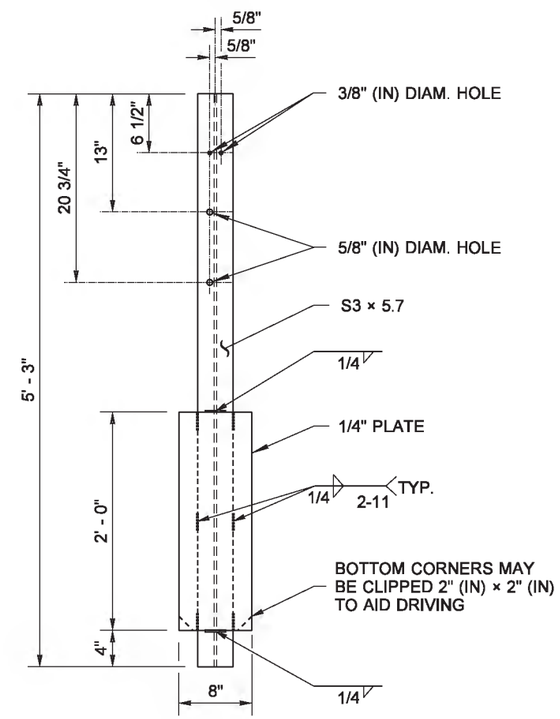

G-2 POST

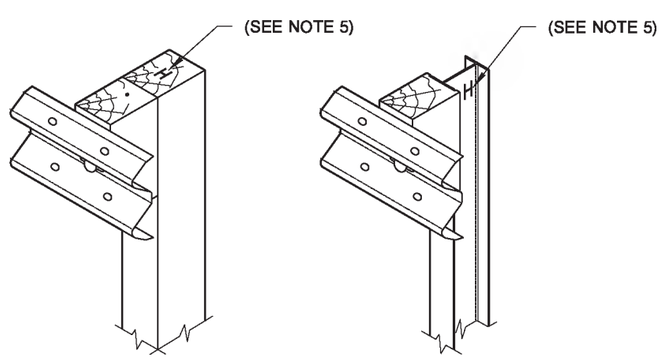

TIMBER POST STEEL POST

PARTIAL ASSEMBLY DETAIL

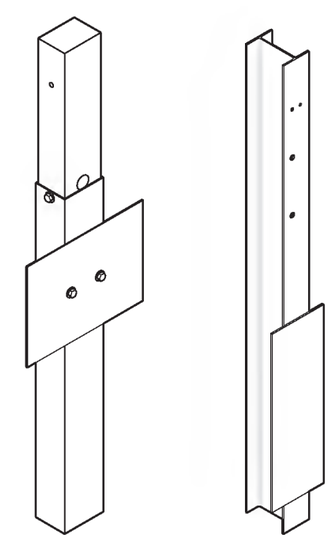

ANCHOR POST G-2 POST

ISOMETRIC

NOTES

1. Wood posts for all guardrail placement plans shall be 6 × 8 except where noted otherwise.
2. Lower hole is for Rub Rail of Type 2 and Type 3 Beam Guardrail.
3. W6×8.5 or W6×9 steel posts and timber blocks are alternates for 6×8 timber posts and blocks. W6×15 steel posts and timber blocks are alternates for 10×10 timber posts and blocks.
4. Holes shall be located on approaching traffic side of web.
5. When "Beam Guardrail Type - _ _ Ft. Long Post" is specified in the Contract, the post length shall be stamped with numbers, 1 1/2" (in) min. high and 3/4" (in) wide at the location where the letter "H" is shown in the ASSEMBLY DETAIL. For wood post applications, the letter shall be stamped to a minimum depth of 1/4" (in). For steel post applications, the letter shall be legible after the post is galvanized. After post installation, it shall be the Contractor's responsibility to ensure the stamped numbers remain visible.
6. Soil plate may be welded to foundation tube. If so, holes in soil plate and foundation tube may be omitted.

Barry, Ed
Jul 14 2015 7:12 AM

BEAM GUARDRAIL POSTS AND BLOCKS

STANDARD PLAN C-1b

SHEET 1 OF 2 SHEETS

APPROVED FOR PUBLICATION
Carpenter, Jeff
Jul 14 2015 11:29 AM
STATE DESIGN ENGINEER

Washington State Department of Transportation

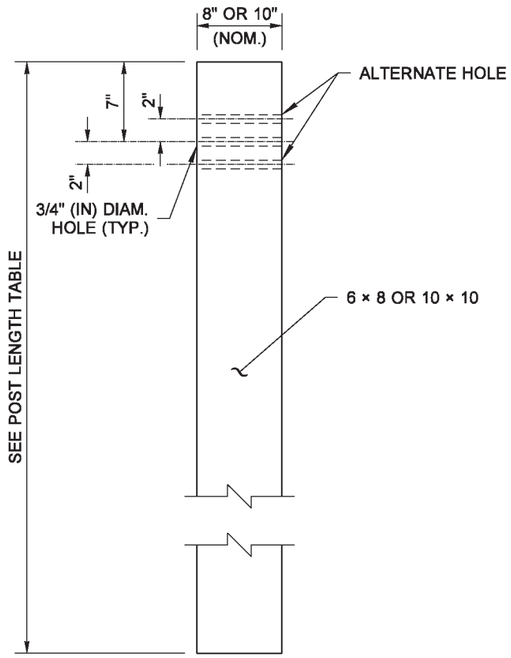

W-BEAM

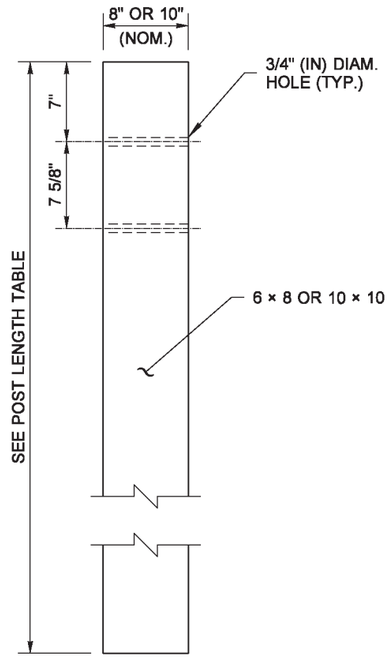

THRIE BEAM

WOOD POST

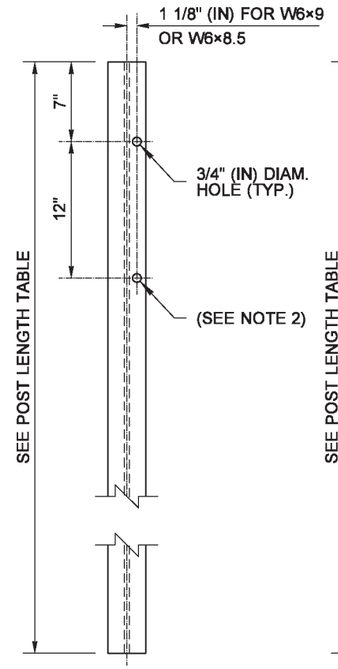

W-BEAM

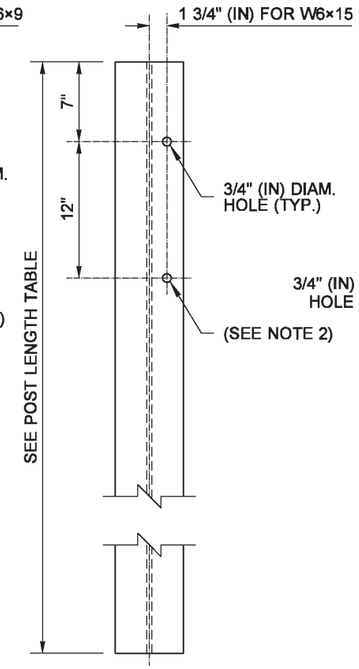

THRIE BEAM

STEEL POST
(SEE NOTES 3 AND 4)

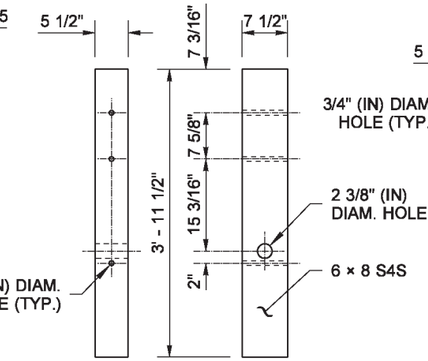

THRIE BEAM

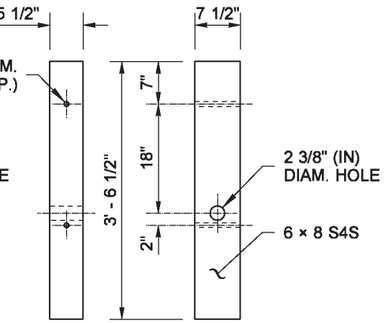

W-BEAM

WOOD BREAKAWAY POST

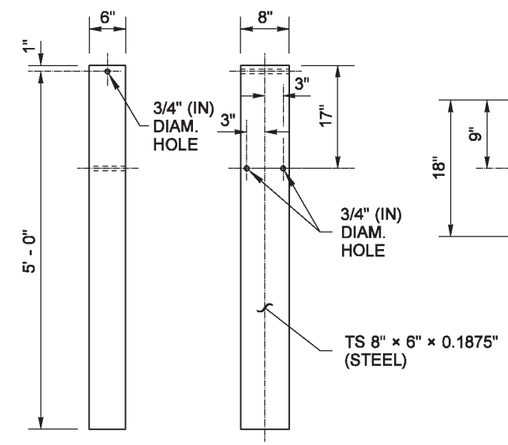

FOUNDATION TUBE

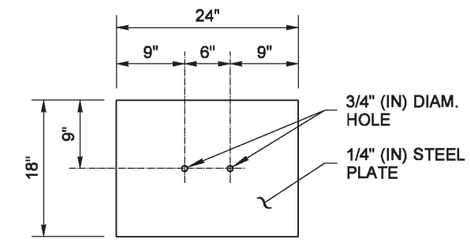

SOIL PLATE

DRAWN BY: FERN LIDDELL

POST LENGTH TABLE	
GUARDRAIL TYPE	LENGTH
1 through 4 & 31	6' - 0"
10 or 11	6' - 6"

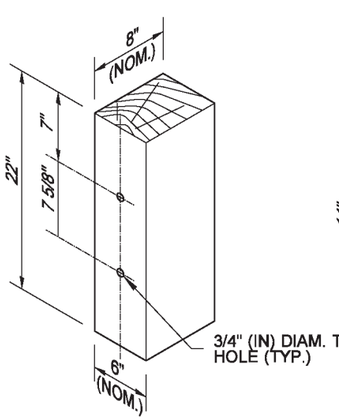

THRIE BEAM WOOD BLOCK FOR WOOD POST

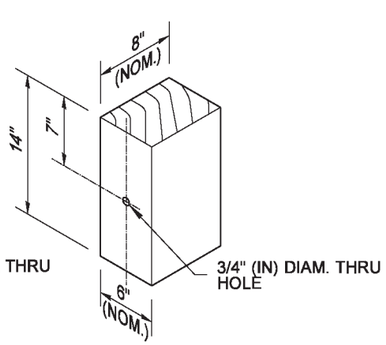

W-BEAM WOOD BLOCK FOR WOOD POST

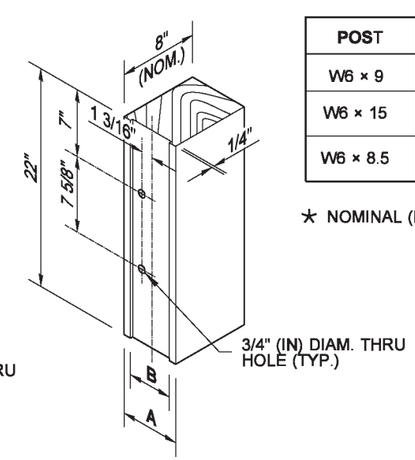

POST	A	B
W6 × 9	6"★	4 1/4"
W6 × 15	8"★	6 1/4"
W6 × 8.5	8"★	6 1/4"

★ NOMINAL (NOM.)

THRIE BEAM WOOD BLOCK FOR STEEL POST

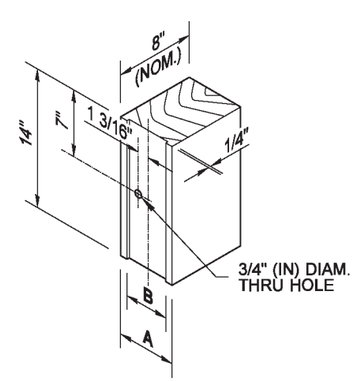

W-BEAM WOOD BLOCK FOR STEEL POST

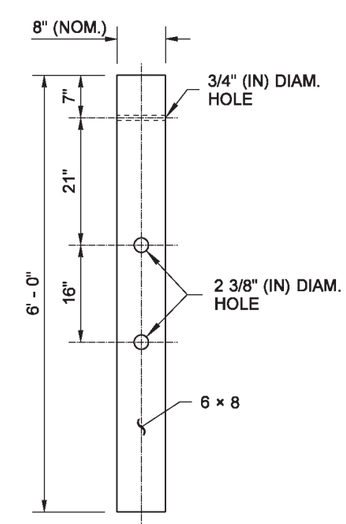

CONTROLLED RELEASING TERMINAL (CRT) POST

EDWARD PATRICK BARRY
STATE OF WASHINGTON
34363
REGISTERED
PROFESSIONAL ENGINEER

Barry, Ed
Jul 14 2015 7:12 AM

BEAM GUARDRAIL POSTS AND BLOCKS

STANDARD PLAN C-1b

SHEET 2 OF 2 SHEETS

APPROVED FOR PUBLICATION
Carpenter, Jeff
Jul 14 2015 11:29 AM
STATE DESIGN ENGINEER
Washington State Department of Transportation

NOTES

1. For post details see Standard Plan, "Beam Guardrail Posts and Blocks".

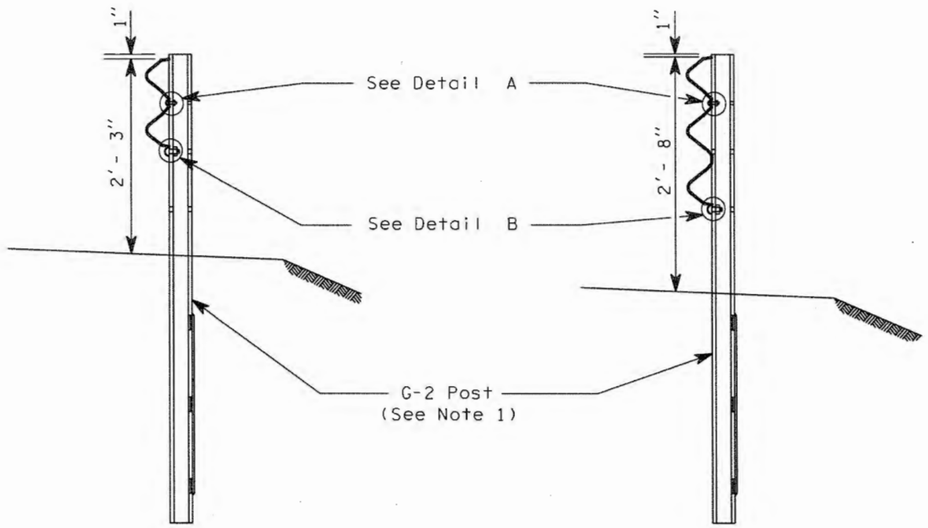

TYPE 20

TYPE 21

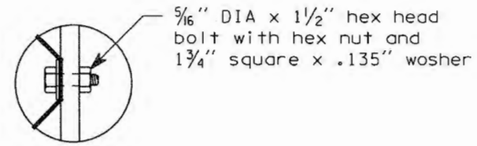

DETAIL A

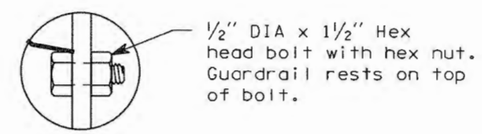

DETAIL B

BEAM GUARDRAIL

CLIFFORD E. MANSFIELD
STATE OF WASHINGTON
15224
REGISTERED
PROFESSIONAL ENGINEER
EXPIRES MAY 3, 1998

STANDARD PLAN C-1c

APPROVED FOR PUBLICATION

STATE DESIGN ENGINEER — 5/02/97 DATE

WASHINGTON STATE DEPARTMENT OF TRANSPORTATION
OLYMPIA, WASHINGTON

NOTES

1. For wood posts, saw top of post and block to 1" above thrie beam guardrail reducer section. For steel posts, drive post down to 1" maximum above the thrie beam guardrail reducer section.

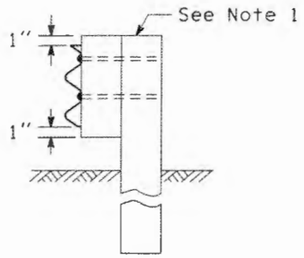

INTERMEDIATE GUARDRAIL
POST CONNECTION DETAILS
(Type A shown)

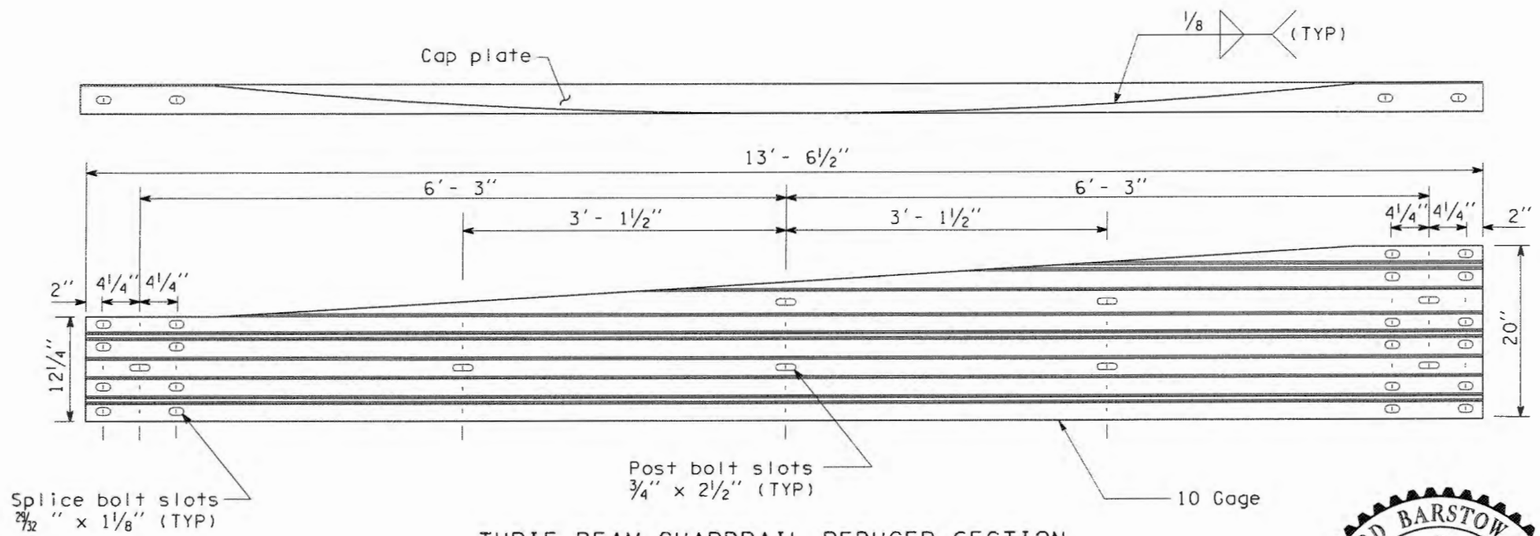

THRIE BEAM GUARDRAIL REDUCER SECTION
TYPE A

(Left section shown, right section reversed)

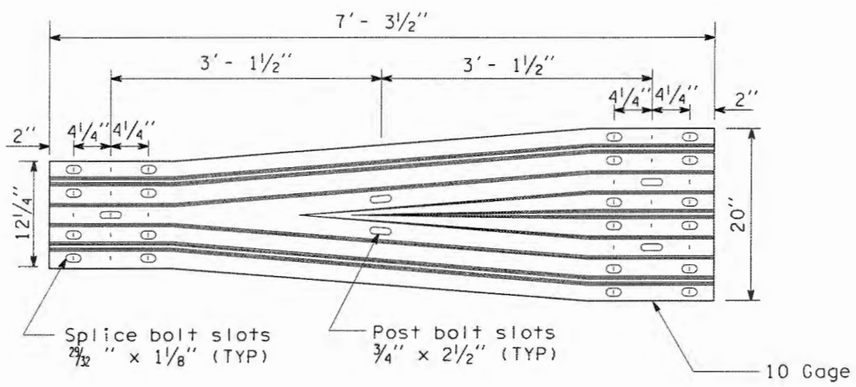

THRIE BEAM GUARDRAIL REDUCER SECTION
TYPE B

EXPIRES JULY 24, 2004

THRIE BEAM GUARDRAIL REDUCER SECTION

STANDARD PLAN C-1d

SHEET 1 OF 1 SHEET

APPROVED FOR PUBLICATION

10.31.03

STATE DESIGN ENGINEER — DATE

Washington State Department of Transportation

DATE	REVISION	BY
09/2003	ADDED 10 GAGE STEEL DESIGNATION; REV. NOTE 1	RG

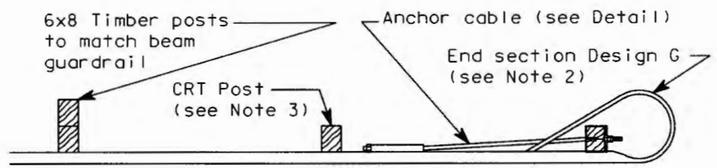

PLAN

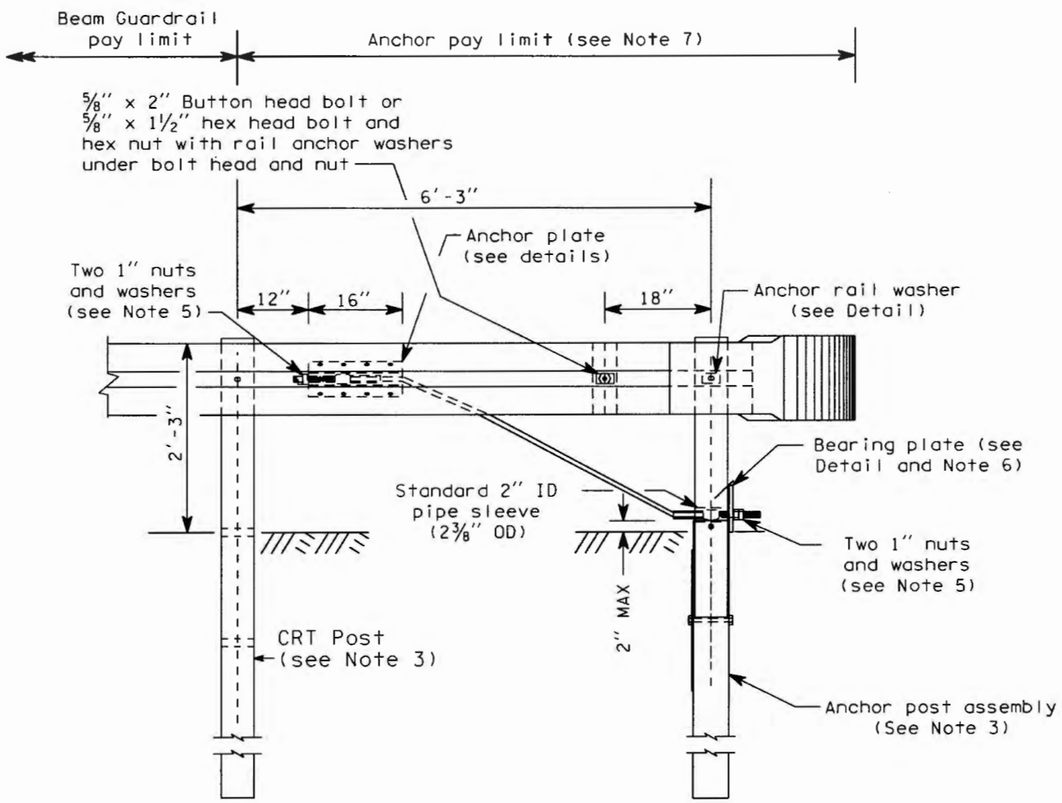

TYPE 1 ANCHOR

NOTES

1. Anchor plate may be constructed from 1/4" plates welded to equal strength and dimensions as shown.
2. For end section details see Standard Plan "Beam Guardrail End Sections".
3. For post details, see Standard Plan "Beam Guardrail Posts and Blocks".
4. Eight 5/8" x 1 1/2" machine bolts with hex nut and washer. Place washer on face side of rail.
5. Outside nut shall be torqued against inside nut a minimum of 100 ft-lbs.
6. Toenail bearing plate with 10d nail at corners to prevent turning.
7. Anchor pay limit does not apply when anchor is included in a Beam Guardrail Terminal.

BEAM GUARDRAIL ANCHOR TYPE 1

CLIFFORD E. MANSFIELD
STATE OF WASHINGTON
15224
REGISTERED
PROFESSIONAL ENGINEER
EXPIRES MAY 3, 1998

STANDARD PLAN C-6

APPROVED FOR PUBLICATION

STATE DESIGN ENGINEER — DATE 5/30/97

WASHINGTON STATE DEPARTMENT OF TRANSPORTATION
OLYMPIA, WASHINGTON

Sheet 1 of 2 Sheets

Small Works Roster Worksheet

PROJECT NAME: 2016 Guardrail Project 2, Sand Road

Vendor: Frank Gurney, Inc.	Address: P. O. Box 11557 Parkwater Station Spokane, WA 99211
Contact Name: Tom Stewart	Requested Service:
Phone Number: 509-535-3069	Initial Contact: E-mail on 5-26-2016
Fax: 509-535-1911	Date Received: 06-01-2016
Email: fgurney@comcast.net	Basis of Award: Before Tax - $42,475.00

Vendor: Petersen Brothers, Inc.	Address: 2008 East Valley Highway Sumner, WA 98390
Contact Name: Ron Petersen	Requested Service:
Phone Number: 253-863-8136	Initial Contact: 5-26-2016
Fax: 253-863-5951	Date Received: **NO RESPONSE**
Email: ron@petersenbrothers.com	Basis of Award: Before Tax -

Quote Awarded:

Amount: $ 42,475.00 Vendor: Frank Gurney, Inc.

Date: June 13, 2016 Approved by BOCC: _____