WHITMAN COUNTY PUBLIC WORKS
SMALL WORKS WORKSHEET

PROJECT NAME: **Guardrail, Non-Flared Terminals, Transitions and Posts.**

Whelan Road #5515 Bridge @ m.p. 3.33

DESCRIPTION: Furnish all guardrail components for newly constructed bridge @ m.p. 3.33. Install transitions, approach rails, terminals, and posts. Whitman County crews will begin construction of bridge @ 3.33 in early August and complete in late August or early September. Whitman County will install posts and Thrie Beam on bridge (Whitman County would like to pick up the Thrie Beam and posts when available). See Complete Detail Attachments.

All materials, equipment, labor and tax costs should be included in the quote. All contractors shall be bonded and must pay State Prevailing Wage Rate for labor except for fabrication. A contract bond will be required. (Please initial your acknowledgement of these requirements: (_____).

All work must be completed by: **October 15th, 2018**

QUOTES MUST BE RETURNED BY: **August 15th, 2018 at 5:00 p.m.**

Contact: **Brandon Kruger – Ext. 5203**
Brandon.Kruger@co.whitman.wa.us

Whitman County Public Works: (509) 397-4622 FAX (509) 397-6210.

(Anticipated award date: August 20th, 2018.)

BASIS OF AWARD: **$**_____

Tax **$**_____

Total: **$**_____

Company Name: _____

Signature: _____

Printed Name: _____

Mailing Address: _____

Phone: _____ FAX: _____

Email: _____

Whelan Bridge Quantity Estimates

Bid Item	Unit	Quantity	Notes
Furnish Thrie Beam Guardrail Element Standard Plan C-1a	L.F.	87.5	6 Typical Rail Elements & 2 Half Sections
Furnish W6x20x33" Galvanized Guardrail Post with Base Plate, Including Hardware	Each	14	Must Include all hardware for attachment to the structure and attaching Thrie Beam Guardrail Elements
Furnish & Install Beam Guardrail Transition Section Type 21 Standard Plans C-25.20-06	Each	4	
Furnish & Install SKT-SP-MGS (TL-3) Beam Guardrail Non-Flared Terminals Standard Plan C-22.40-05	Each	4	

Small Works Roster Worksheet

PROJECT NAME: 2018 Guardrail, Non-Flared Terminals, Transitions and Posts (Whelan Bridge)

Vendor: Carlton Builders, LLC	Address: 902 S. Main St. Colfax, WA 99111
Contact Name: Nick VanArsdel	Requested Service: Guardrail
Phone Number: 509-592-7221	Initial Contact: E-mail on 7-30-18
Fax: 509-397-3478	Date Received: NO Response
Email: TIM@CARLTON-BUILDERS.COM	Basis of Award: Before Tax
Vendor: Frank Gurney, Inc.	Address: P. O. Box 11557 Parkwater Station Spokane, WA 99211
Contact Name: Tom Stewart	Requested Service: Guardrail
Phone Number: 509-535-3069	Initial Contact: E-mail on 7-30-18
Fax: 509-535-1911	Date Received: 08-09-18
Email: fgurney@comcast.net	Basis of Award: Before Tax - $36,000.00
Vendor: Peterson Brothers, Inc.	Address: 2008 East Valley Highway Sumner, WA 98390
Contact Name: Jerry Severns Ron Petersen	Requested Service: Guardrail
Phone Number: 253-863-8136	Initial Contact: E-mail on 7-30-18
Fax: 253-863-5951	Date Received: NO Response

Email: Jerry@petersenbrothers.com ron@petersenbrothers.com	Basis of Award: Before Tax -
Vendor: Rains Contracting	Address: P.O. Box 340 Malott, WA 98829-0340
Contact Name: Julie Judkins	Requested Service: Guardrail
Phone Number: 509-422-2326	Initial Contact: E-mail on 7-30-18
Fax: 509-422-3435	Date Received: NO Response
Email: Admin@rainscontracting.com	Basis of Award: Before Tax

Quote Awarded:

Amount: $36,0000.00 Vendor: Frank Gurney, Inc.

Date: August 20, 2018 Approved by BOCC: _____

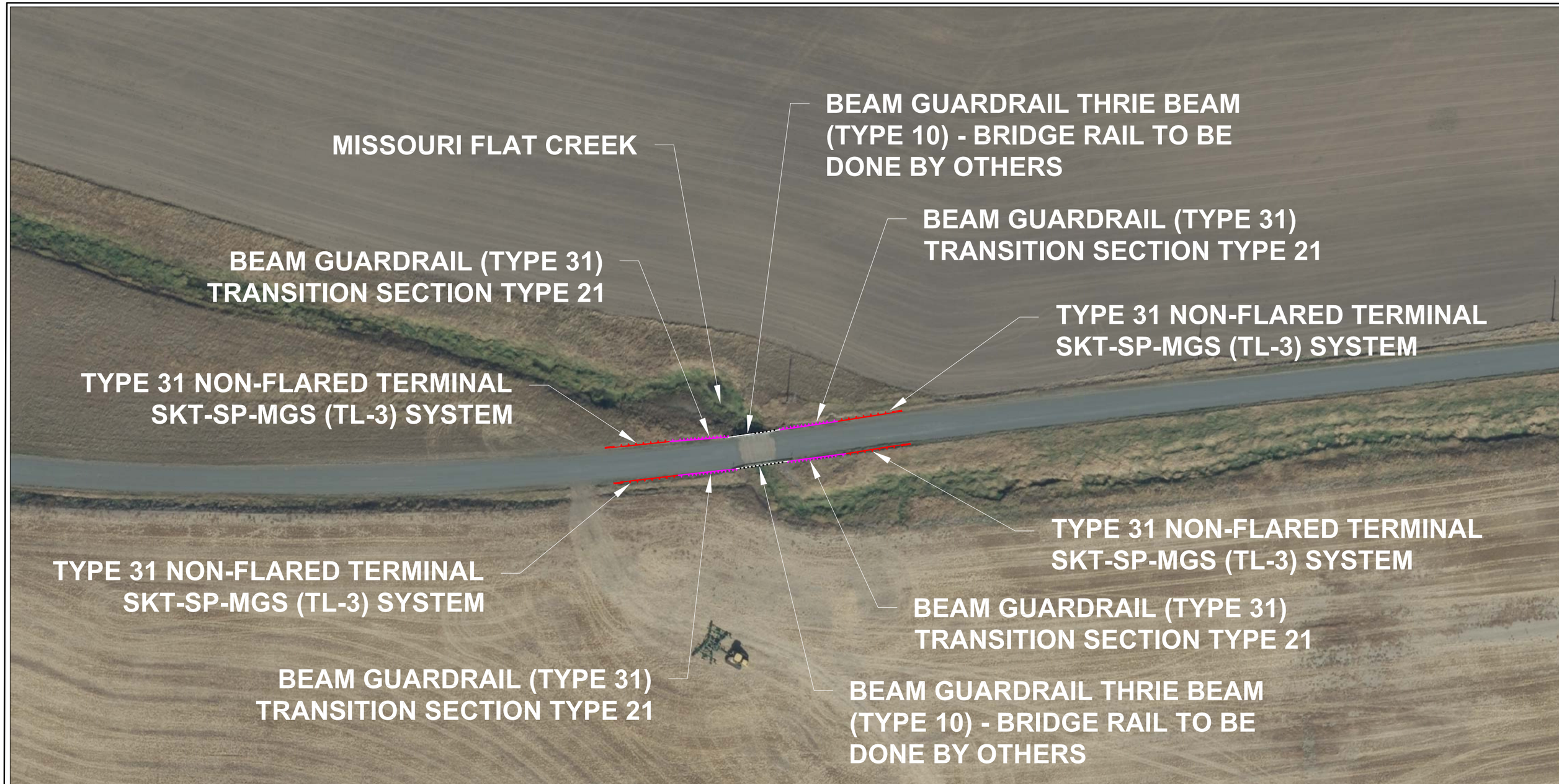

DESCRIPTION OF WORK

THIS LOCATION CONSISTS OF FOUR SEPARATE RUNS ATTACHED TO THE CORNERS OF WHELAN BRIDGE NO. 5515–03.33

ALL FOUR CORNERS WILL BE CONNECTED TO BEAM GUARDRAIL THRIE BEAM TYPE 10 TO A BEAM GUARDRAIL TYPE 31 TRANSITION SECTION TYPE 21 AND CORNERS WILL TERMINATE WITH A TYPE 31 SKT–SP–MGS NON–FLARED TERMINAL.

DRAWN BY: FERN LIDDELL

NOTES

1. An SKT-350 as manufactured by Road Systems, Inc. shall be installed according to manufacturer's recommendations. When a TL2 terminal is specified in the Contract an SKT-TL2 as manufactured by Road Systems, Inc. shall be installed according to the manufacturer's recommendations.
2. A reflectorized object marker shall be installed according to manufacturer's recommendations.
3. When snow load post washers and snow load rail washers are required by the Contract, the snow load rail washers must not be installed within the terminal limits.
4. Terminal shall be installed at a taper, ensuring that end piece is entirely off the shoulder.
5. Length for SKT-350 is 50' (ft). Length for SKT-TL2 is 25' (ft).

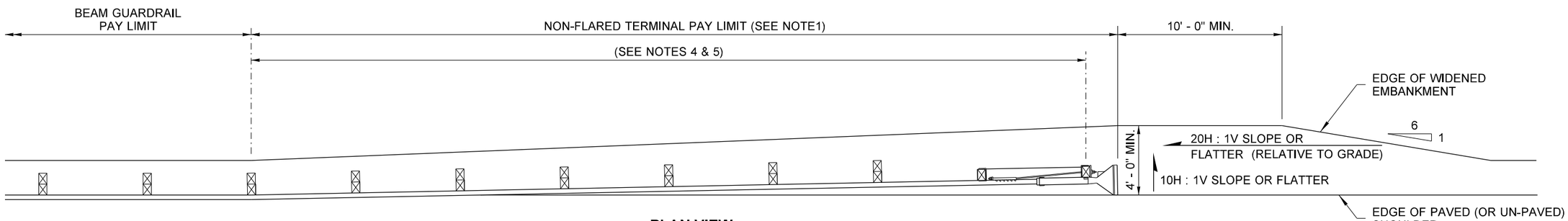

PLAN VIEW

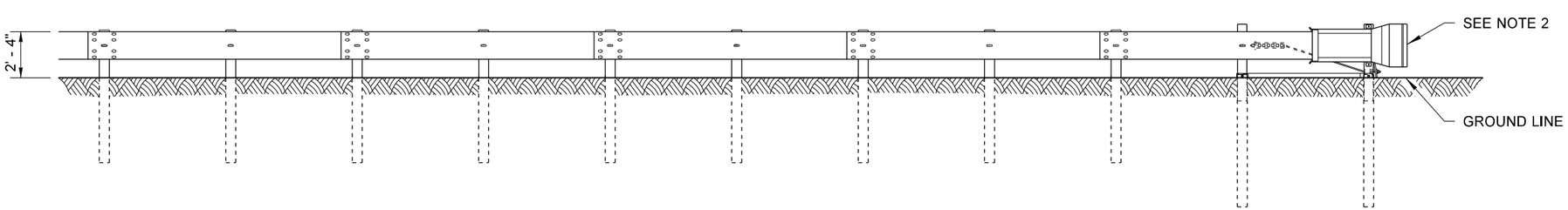

ELEVATION VIEW

BEAM GUARDRAIL NON-FLARED TERMINAL

STANDARD PLAN C-4e

SHEET 1 OF 1 SHEET

APPROVED FOR PUBLICATION

STATE DESIGN ENGINEER

Washington State Department of Transportation

DRAWN BY: FERN LIDDELL

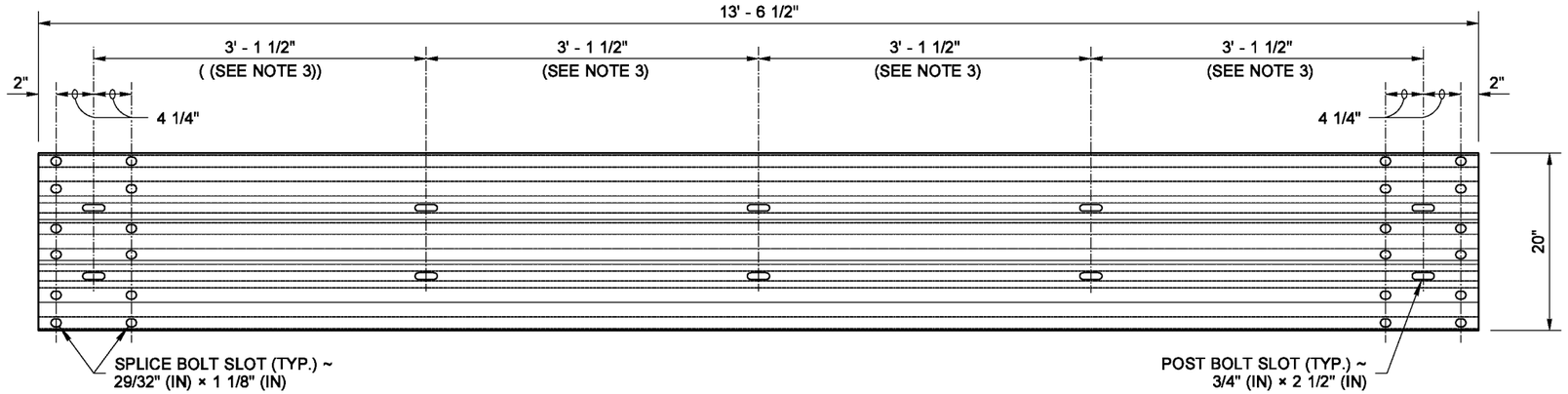

TYPICAL RAIL ELEMENT

NOTES

1. Type 10 post shall be 6 × 8 timber, OR either W6 × 9, or W6 × 8.5 steel. Type 11 post shall be 10 × 10 timber or W6 × 15. For additional details see **Standard Plan C-1b.**
2. Type 10 guardrail post spacing shall be 6' - 3" on center. Type 11 shall be a maximum of 3' - 1 1/2" on center.
3. Spacing may vary depending on application. See **Standard Specification Section 9-16.3(1)** for rail element requirements.

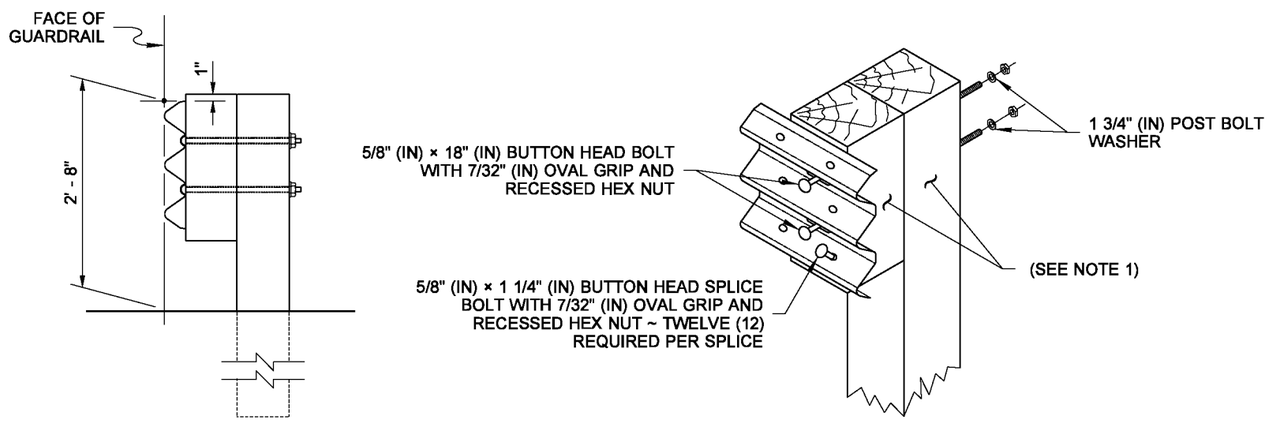

RAIL ASSEMBLY **WOOD POST ASSEMBLY**

TYPE 10

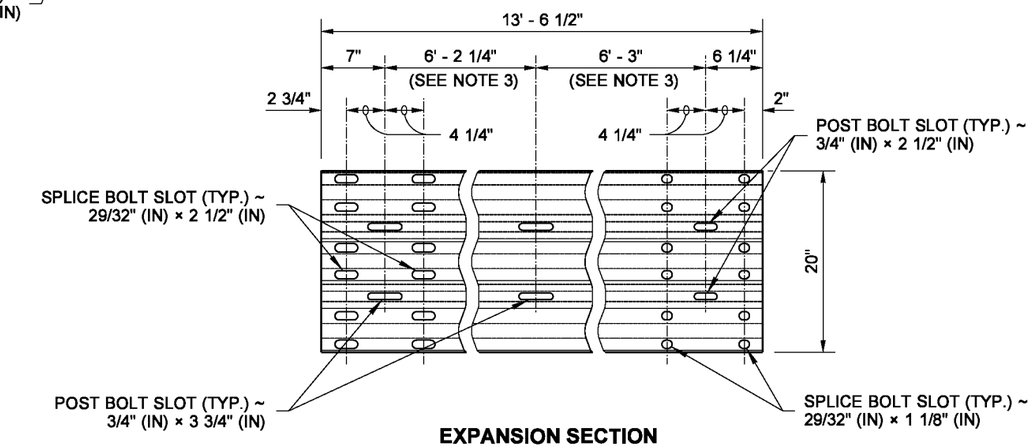

EXPANSION SECTION

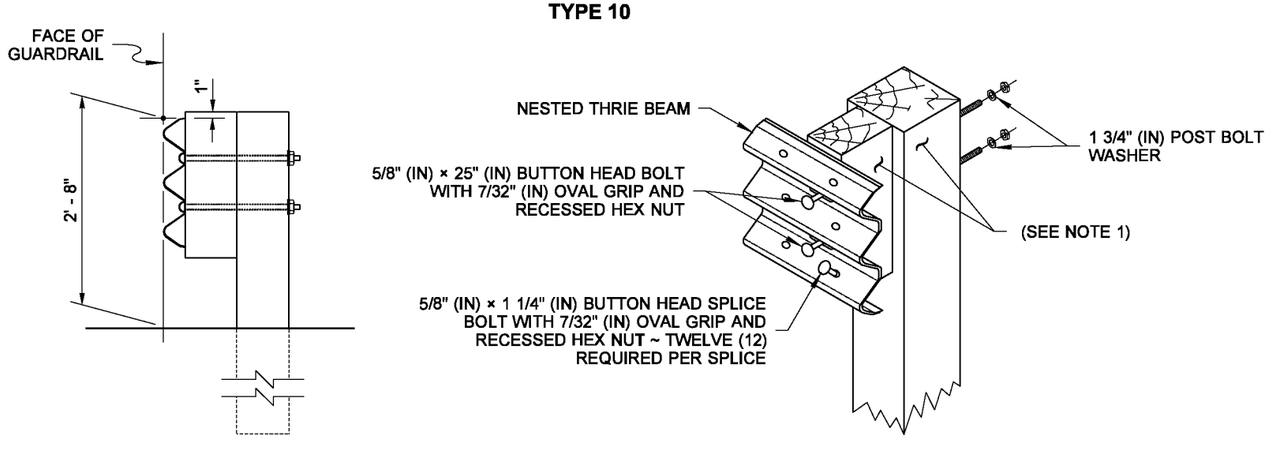

RAIL ASSEMBLY **WOOD POST ASSEMBLY**

TYPE 11

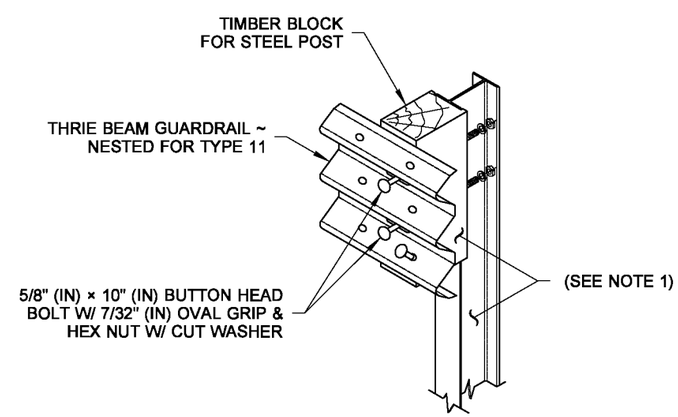

STEEL POST ASSEMBLY

TYPES 10 AND 11

BEAM GUARDRAIL (THRIE BEAM)

STANDARD PLAN C-1a

SHEET 1 OF 1 SHEET

APPROVED FOR PUBLICATION

STATE DESIGN ENGINEER

Washington State Department of Transportation

DRAWN BY: FERN LIDDELL

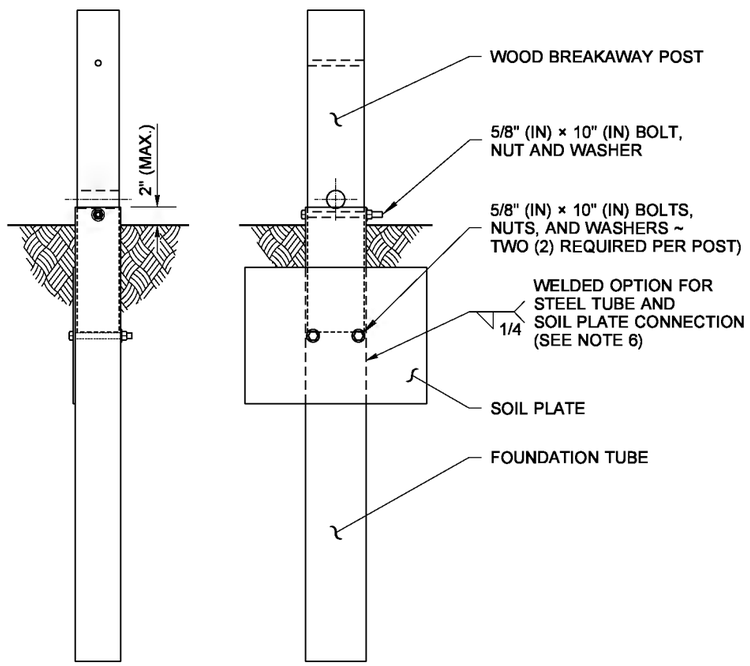

FRONT VIEW SIDE VIEW

ANCHOR POST ASSEMBLY

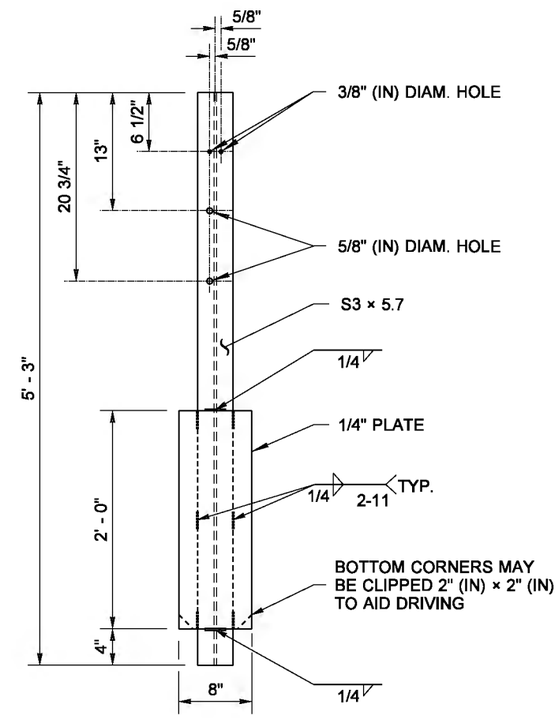

G-2 POST

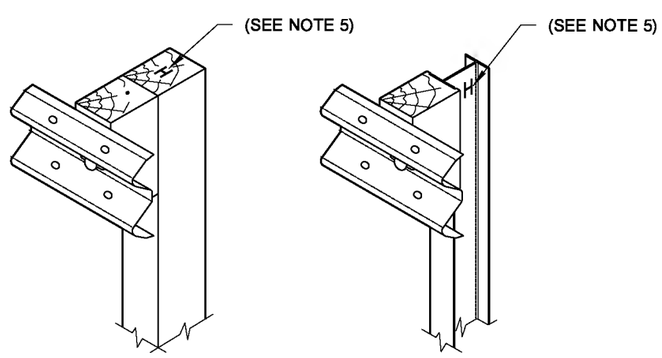

TIMBER POST STEEL POST

PARTIAL ASSEMBLY DETAIL

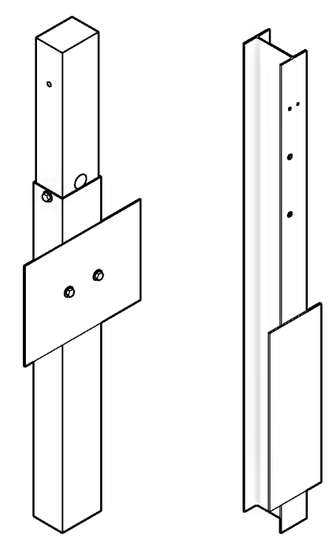

ANCHOR POST G-2 POST

ISOMETRIC

NOTES

1. Wood posts for all guardrail placement plans shall be 6 × 8 except where noted otherwise.
2. Lower hole is for Rub Rail of Type 2 and Type 3 Beam Guardrail.
3. W6×8.5 or W6×9 steel posts and timber blocks are alternates for 6×8 timber posts and blocks. W6×15 steel posts and timber blocks are alternates for 10×10 timber posts and blocks.
4. Holes shall be located on approaching traffic side of web.
5. When "Beam Guardrail Type - _ _ Ft. Long Post" is specified in the Contract, the post length shall be stamped with numbers, 1 1/2" (in) min. high and 3/4" (in) wide at the location where the letter "H" is shown in the ASSEMBLY DETAIL. For wood post applications, the letter shall be stamped to a minimum depth of 1/4" (in). For steel post applications, the letter shall be legible after the post is galvanized. After post installation, it shall be the Contractor's responsibility to ensure the stamped numbers remain visible.
6. Soil plate may be welded to foundation tube. If so, holes in soil plate and foundation tube may be omitted.

BEAM GUARDRAIL POSTS AND BLOCKS

STANDARD PLAN C-1b

SHEET 1 OF 2 SHEETS

APPROVED FOR PUBLICATION

STATE DESIGN ENGINEER

Washington State Department of Transportation

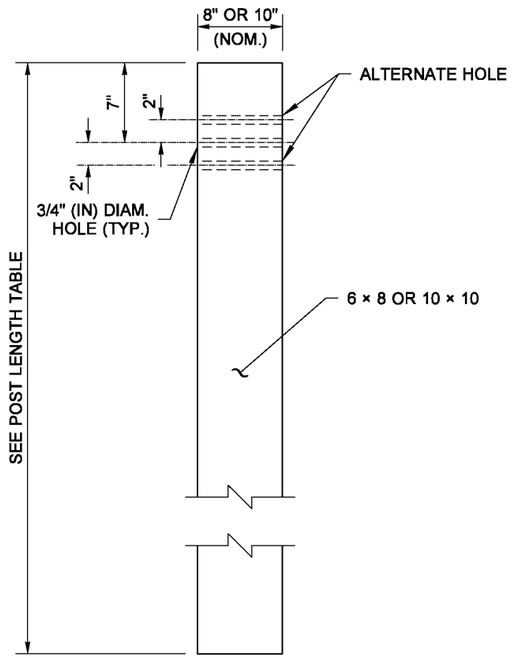

W-BEAM

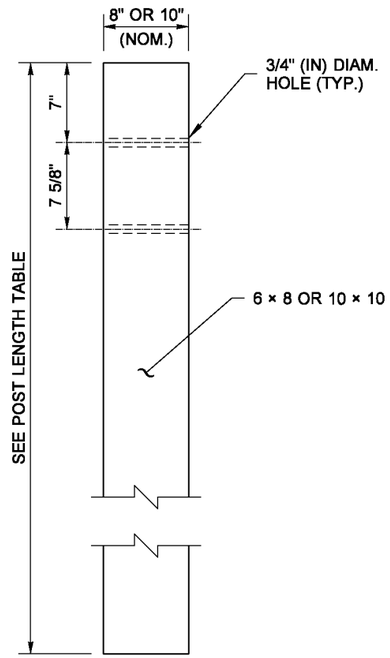

THRIE BEAM

WOOD POST

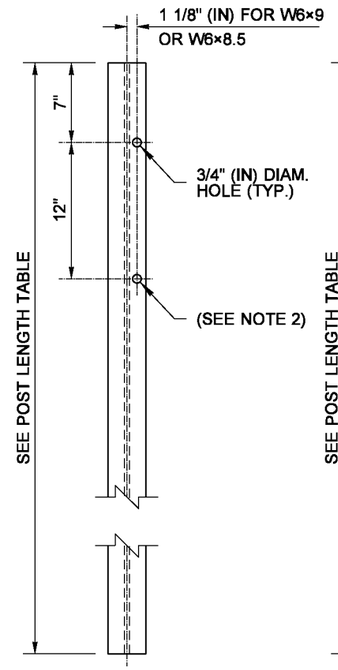

W-BEAM

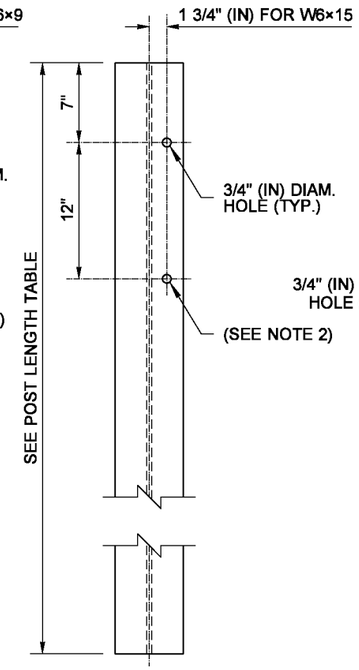

THRIE BEAM

STEEL POST
(SEE NOTES 3 AND 4)

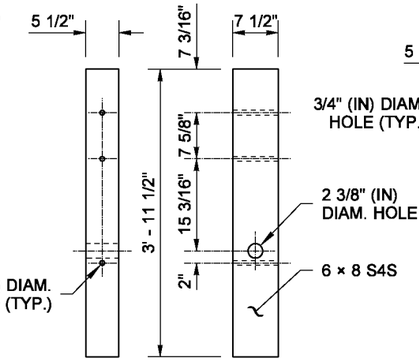

THRIE BEAM

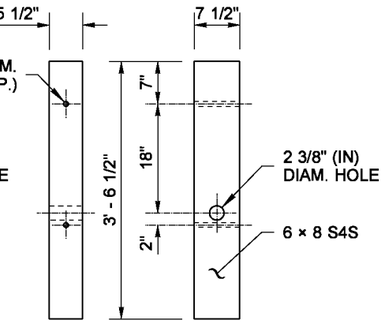

W-BEAM

WOOD BREAKAWAY POST

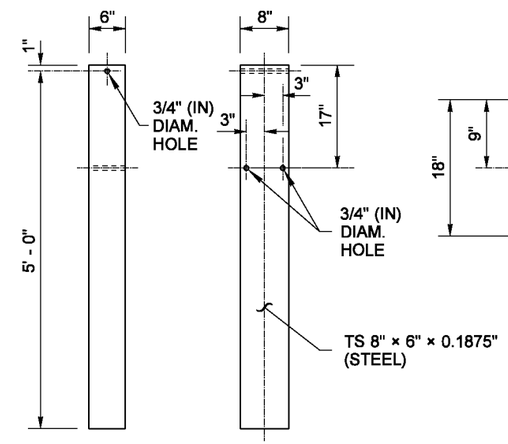

FOUNDATION TUBE

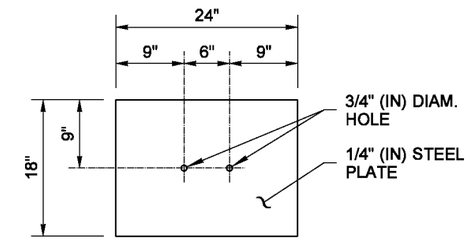

SOIL PLATE

POST LENGTH TABLE	
GUARDRAIL TYPE	LENGTH
1 through 4 & 31	6' - 0"
10 or 11	6' - 6"

DRAWN BY: FERN LIDDELL

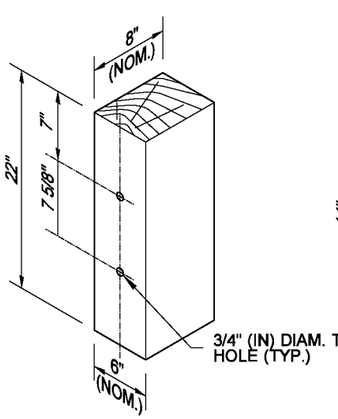

THRIE BEAM WOOD BLOCK FOR WOOD POST

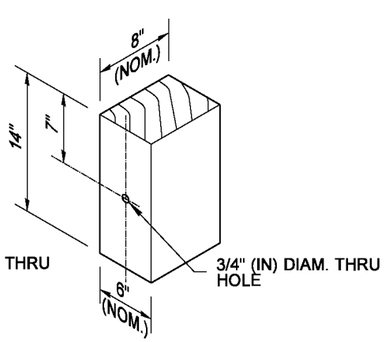

W-BEAM WOOD BLOCK FOR WOOD POST

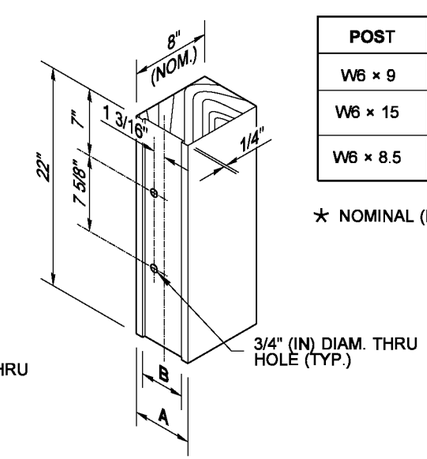

POST	A	B
W6 × 9	6"★	4 1/4"
W6 × 15	8"★	6 1/4"
W6 × 8.5	8"★	6 1/4"

★ NOMINAL (NOM.)

THRIE BEAM WOOD BLOCK FOR STEEL POST

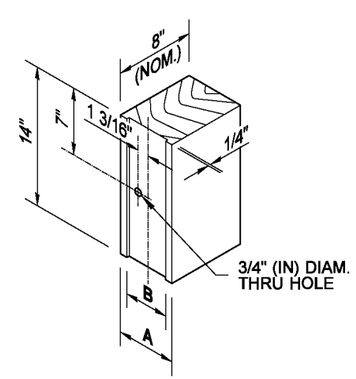

W-BEAM WOOD BLOCK FOR STEEL POST

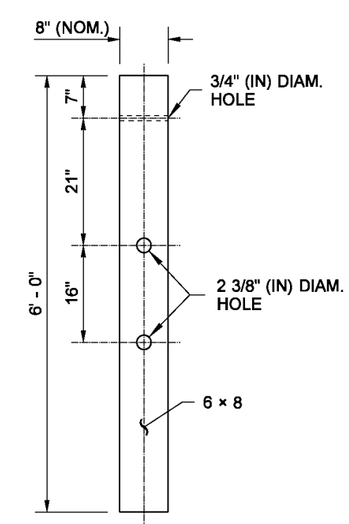

CONTROLLED RELEASING TERMINAL (CRT) POST

EDWARD PATRICK BARRY
STATE OF WASHINGTON
34363
REGISTERED
PROFESSIONAL ENGINEER

BEAM GUARDRAIL POSTS AND BLOCKS

STANDARD PLAN C-1b

SHEET 2 OF 2 SHEETS

APPROVED FOR PUBLICATION

STATE DESIGN ENGINEER

Washington State Department of Transportation

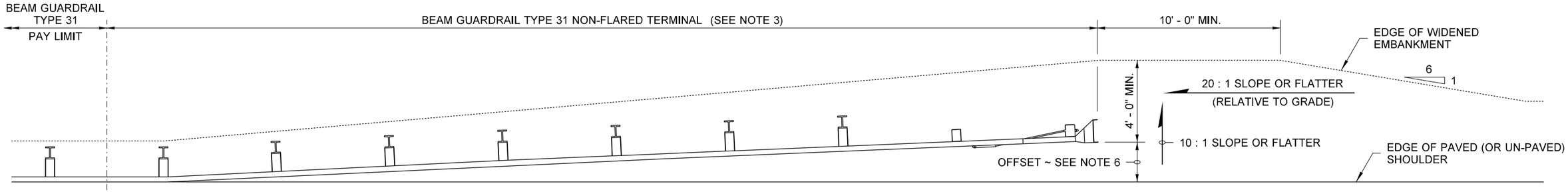

PLAN VIEW
SKT-SP-MGS (TL-3) SHOWN

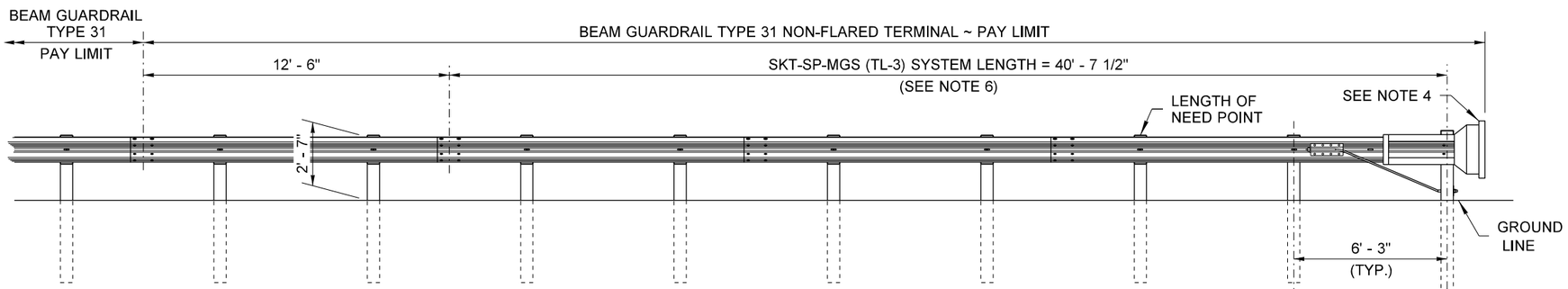

ELEVATION VIEW
SKT-SP-MGS (TL-3)
STEEL POSTS

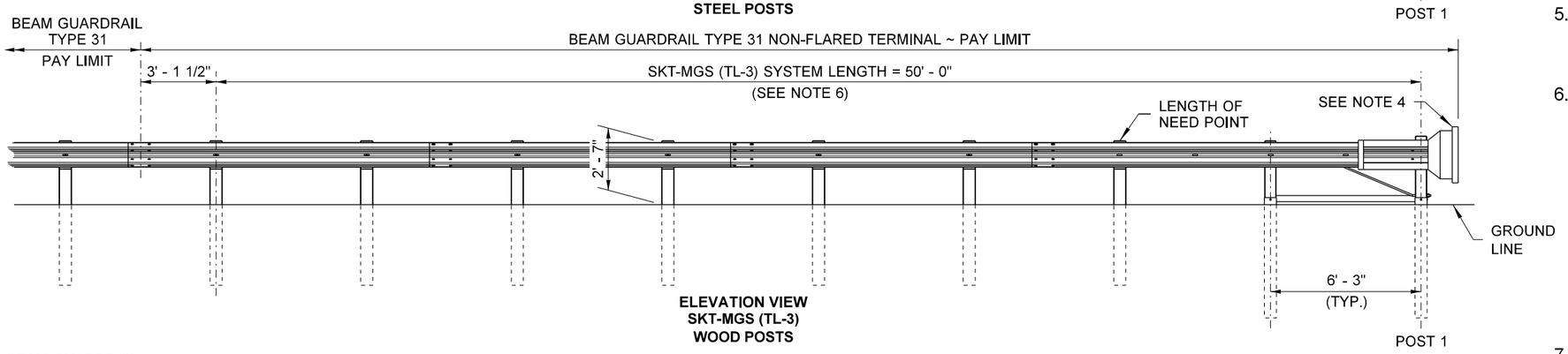

ELEVATION VIEW
SKT-MGS (TL-3)
WOOD POSTS

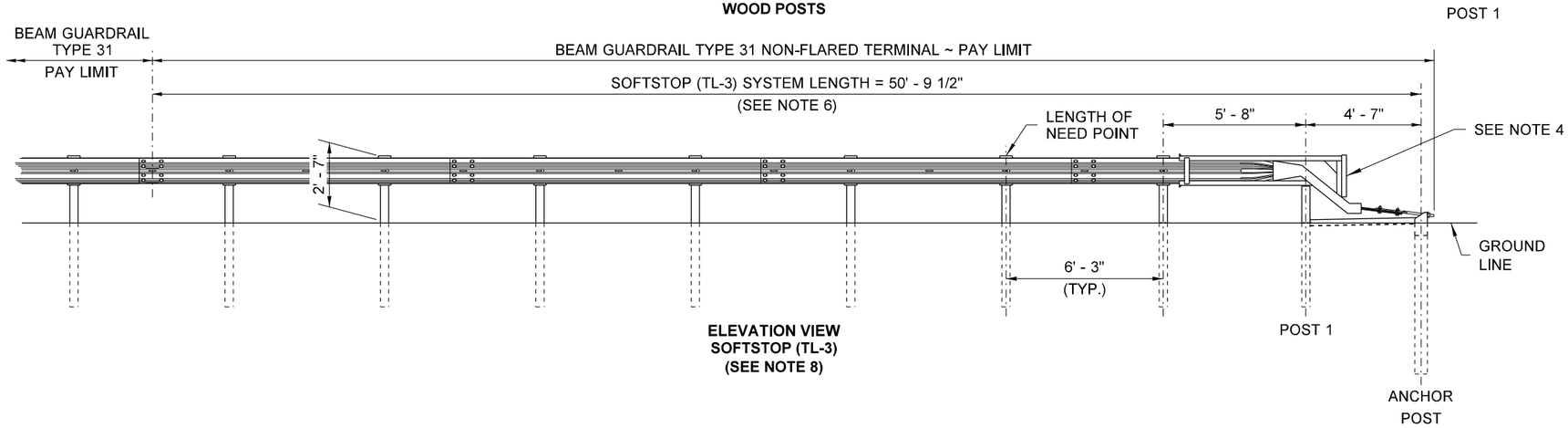

ELEVATION VIEW
SOFTSTOP (TL-3)
(SEE NOTE 8)

NOTES

1. The Implementation of the Manual for Assessment of Safety Hardware (MASH) criteria may result in the acceptance of guardrail terminal systems currently not shown on this plan, or the elimination of guardrail terminals that are on this plan. Non-Flared terminals shall be selected from the WSDOT Qualified Products List (QPL) or approved through the WSDOT Request for Approval of Materials (RAM) process.

2. This terminal is FHWA eligible at Test Level Three (TL-3) and may be used for all posted speeds.

3. An SKT-MGS (TL-3) or an SKT-SP-MGS (TL-3) as manufactured by Road Systems, Inc. or SOFTSTOP (TL-3) as manufactured by Trinity Highway Products, LLC shall be installed according to manufacturer's recommendations.

4. A reflectorized object marker shall be installed according to manufacturer's recommendations.

5. When snow load post washers and snow load rail washers are required by the Contract, the snow load rail washers shall not be installed within the terminal limits.

6. Terminal shall be installed at a widening, ensuring the end piece is entirely off the shoulder. While this terminal does not require an offset at the end, a flare is recommended. For the SKT-MGS (TL-3) and the SKT-SP-MGS (TL-3), a maximum flare of 25 :1 or flatter over the length of the terminal is allowed with a maximum offset of 24" (in) over 50' (ft).

   For the SOFTSTOP (TL-3) a maximum flare of 25.4 : 1 or flatter is allowed over the system length of 50' - 9 1/2" with a maximum offset of 24" (in) at the anchor post.

7. For terminal details, see WSDOT approved manufacturer's drawings.

8. The SOFTSTOP terminal is supplied with steel posts only. It can be used with guardrail runs composed of steel or wood guardrail posts.

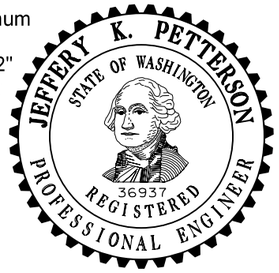

BEAM GUARDRAIL TYPE 31 NON-FLARED TERMINAL (ALL POSTED SPEEDS) STANDARD PLAN C-22.40-05

SHEET 1 OF 1 SHEET

APPROVED FOR PUBLICATION

STATE DESIGN ENGINEER

Washington State Department of Transportation

DRAWN BY: FERN LIDDELL

NOTES

1. This guardrail transition is for connection to a vertical concrete shape, a single slope, or a safety-shape barrier. The toe of the single slope and the safety-shape barrier shall be tapered or the barrier blocked out so that the toe of the barrier does not project past the face of the approach guardrail.
2. See **Standard Plan C-24.10** for details regarding connection to bridge rail or traffic barrier.
3. For details of typical components, see **Standard Plans C-1b** and **C-20.10**.

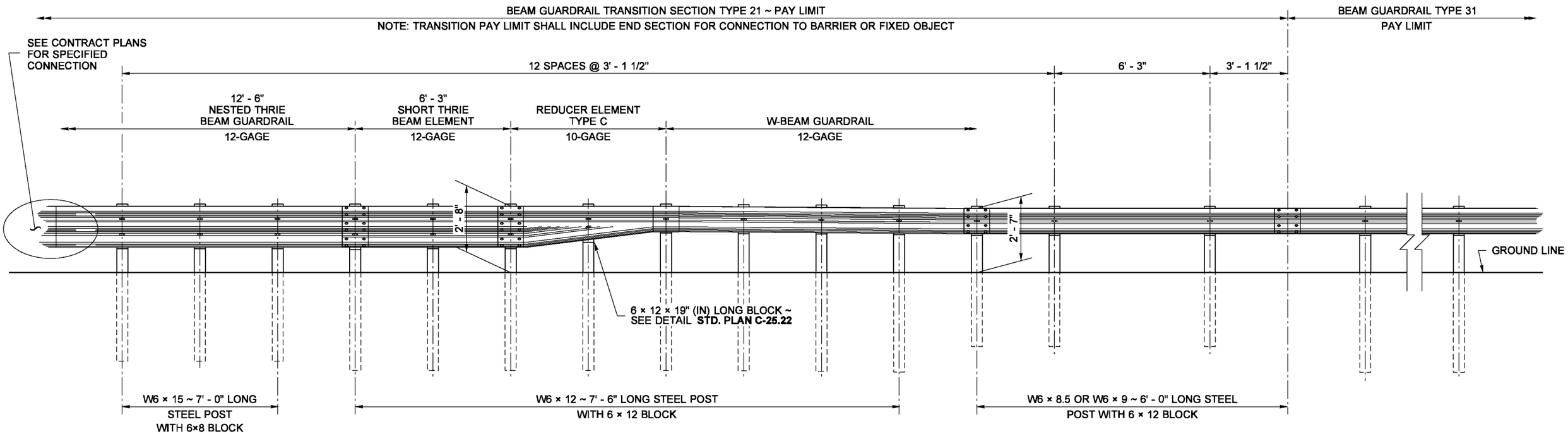

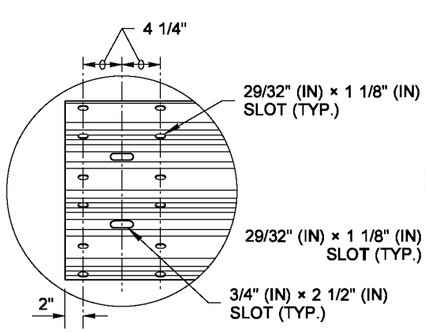

DETAIL (A)

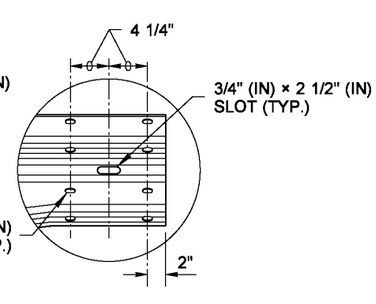

DETAIL (B)

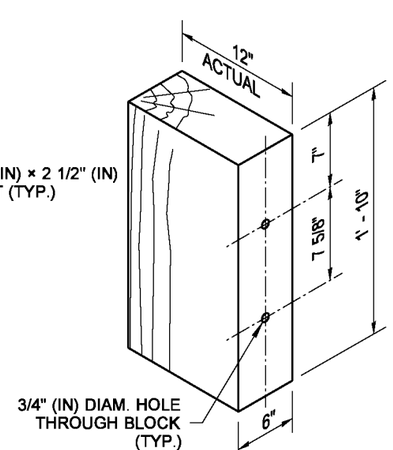

THRIE BEAM WOOD BLOCK

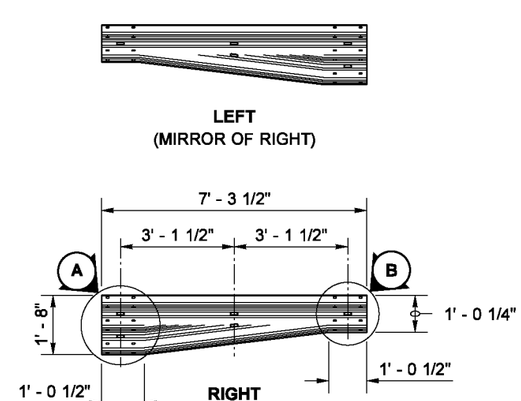

REDUCER ELEMENT TYPE C

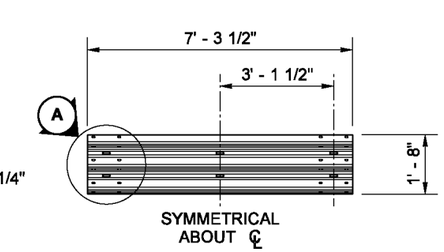

SHORT THRIE BEAM ELEMENT

BEAM GUARDRAIL (TYPE 31) TRANSITION SECTION TYPE 21

STANDARD PLAN C-25.20-06

SHEET 1 OF 1 SHEET

APPROVED FOR PUBLICATION

STATE DESIGN ENGINEER

Washington State Department of Transportation

DRAWN BY: FERN LIDDELL

NOTES

1. See **Standard Plan C-1b, C-20.10,** and **C-25.20** for rail elements and thrie beam block details.
2. When a transition is required on the trailing end of the bridge, use a mirror image of this plan.
3. For additional alternatives not shown, see Contract Plans.

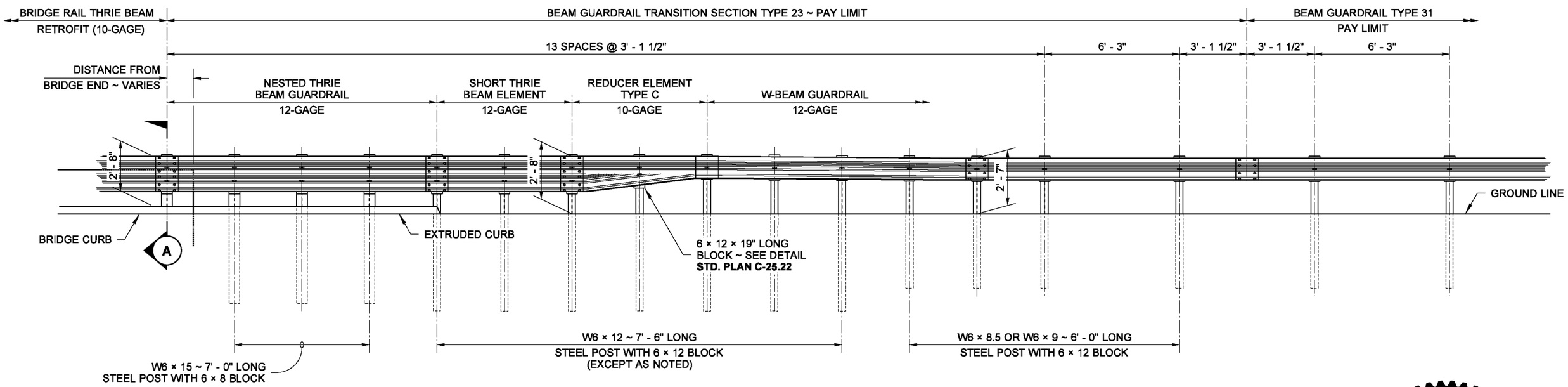

TYPE 23

APPROACH END (SHOWN - SEE NOTE 2)

THRIE BEAM INSTALLED AT FACE OF CURB

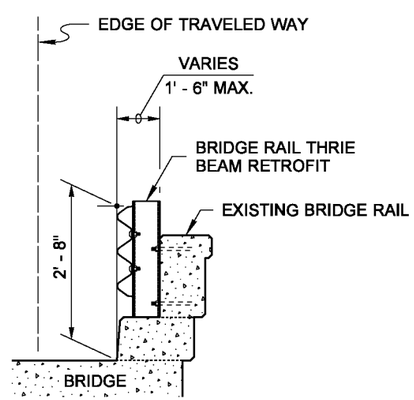

SECTION (A)

ALTERNATIVE 1

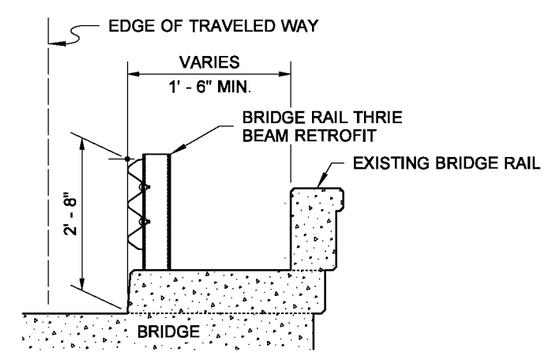

SECTION (A)

ALTERNATIVE 2

BEAM GUARDRAIL (TYPE 31)
TRANSITION SECTION
TYPE 23

STANDARD PLAN C-25.26-03

SHEET 1 OF 1 SHEET

APPROVED FOR PUBLICATION

STATE DESIGN ENGINEER

Washington State Department of Transportation