Contract Documents

Whitman County
Carothers Road Solid Waste Facility

Contact Water and Fire Suppression Water Holding Tanks Project

Bid No. XEW31

Whitman County Department of
Public Works

For information regarding this project, contact:
Mark Storey, PE
Public Works Director/County Engineer
(509) 397-5204

March 2017

Prepared by:

Set No.: _____

CONTRACT DOCUMENTS

Bid No. XEW31

CAROTHERS ROAD SOLID WASTE FACILITY
CONTACT WATER AND FIRE SUPRESSION WATER HOLDING TANKS PROJECT

Prepared for:

WHITMAN COUNTY

March 2017

Prepared by: **Travis Pyle, PE**

QA/QC: **Robert Church, PE**

TRAVIS A. PYLE
STATE OF WASHINGTON
38820
REGISTERED
PROFESSIONAL ENGINEER
3-17-2017

GreatWest engineering

TABLE OF CONTENTS

PART 1 – PROCUREMENT REQUIREMENTS

Section	Title
PROCUREMENT REQUIREMENTS AND FORMS (WHITE SECTION)	
00100	Advertisement for Bids
00200	Instructions to Bidders
PROCUREMENT REQUIREMENTS AND FORMS (PINK SECTION)	
00400	Bid Form
PROCUREMENT REQUIREMENTS AND FORMS (WHITE SECTION)	
C-430	Bid Bond
C-943	Contractor's Qualification Form
C-944	Noncollusion Affidavit
C-945	Contractor's Affidavit, Affidavit for Individual
C-946	Affidavit for Copartnership
C-947	Affidavit for Corporation
C-950	Agreement to Affirmative Action

PART 2 – CONTRACTING REQUIREMENTS

Section	Title
CONTRACTING FORMS (WHITE SECTION)	
00500	Agreement Form
C-510	Notice of Award
C-515	Acceptance of Notice of Award
C-550	Notice to Proceed
C-555	Acceptance of Notice to Proceed
C-610	Performance Bond
C-615	Payment Bond
C-625	Substantial Completion
C-948	Lien Release Form
C-949	Request to Sublet Work
CONDITIONS OF THE CONTRACT (GREEN SECTION)	
00700	General Conditions
CONDITIONS OF THE CONTRACT (GOLD SECTION)	
00800	Supplementary Conditions
CONDITIONS OF THE CONTRACT (WHITE SECTION)	
C-951	Statement of Intent to Pay Prevailing Wage on Public Works Contract*
C-952	Affidavit of Wages Paid on Public Works Contract*

**Refer to the Washington State Department of Labor & Industries for applicable Prevailing Wage Rates.*

PART 3 – TECHNICAL SPECIFICATIONS

Section	Title
DIVISION 1 – GENERAL REQUIREMENTS (WHITE SECTION)	
01035	Amending and Supplementing Contract Documents
01040	Project Coordination

01100	Summary of Work
01275	Measurement and Payment
01300	Submittals
01320	Construction Progress Documentation
01340	Requests for Information (RFI)
01400	Contractor Quality Controls
01500	Construction and Temporary Facilities
01600	Product Requirements
01700	Contract Closeout
01730	Execution Requirements
01800	Equipment Testing and System Startup

DIVISION 2 – SITE CONSTRUCTION (WHITE SECTION)

Section	**Title**
02221	Trenching
02232	Site Preparation
02300	Earthwork
02644	HDPE Embedment Liner
02665	Pipes, Valves and Appurtenances
02668	Underground Storage Tanks
02700	Contact Water Lift Stations

DIVISION 3 – CONCRETE (WHITE SECTION)

Section	**Title**
03100	Concrete Formwork
03200	Reinforcement Steel
03290	Joints in Concrete
03300	Cast in Place Concrete
03315	Grout

DIVISION 5 – METALS (WHITE SECTION)

Section	**Title**
05521	Pipe and Tube Railings

PART 4 – CONSTRUCTION PLANS

Attached bearing the title, “Carothers Road Solid Waste Facility, Contact Water and Fire Suppression Water Holding Tanks Project”

ATTACHMENTS

A – Construction Quality Assurance (CQA) Plan
B – Geotechnical Findings and Recommendation Letter

PART 1

PROCUREMENT REQUIREMENTS

ADVERTISEMENT FOR BIDS

SECTION 00100

ADVERTISEMENT FOR BIDS
BID NO. XEW31

Owner:	Whitman County Board of County Commissioners 400 N. Main Street Colfax, WA 99111 Phone: (509) 397-6200 (main) Mark Storey, PE (509) 397-5204
Project:	Carothers Road Solid Waste Facility Contact Water and Fire Suppression Water Holding Tanks Project
Engineer:	Travis Pyle, PE Great West Engineering, Inc. 3363 N. Lakeharbor Lane Boise, ID 83703 (208) 576-6671

Sealed Bids for the Project will be received in paper copy form by Whitman County Board of County Commissioners, State of Washington, at its office in the Whitman County Courthouse in Colfax, WA, **until 11 am Pacific Time, on Monday, April 17, 2017**, at which time all bids will be opened and publicly read. Any Bids received after the specified time will not be considered. Whitman County is not liable for delayed mail service or other delays that may cause the Bidder's bid package to not arrive on time. It is the Bidder's responsibility to ensure that their Bid is received on time and at the correct location. Bids received after the date and time prescribed for the opening of bids, or not submitted at the correct location or in the designated manner, will not be accepted and will be returned to the Bidder unopened. Refer to the Instructions to Bidders for a list of items that are required in the bid.

Each bid shall be separately sealed in an envelope and addressed to the Whitman County Board of County Commissioners with the name of the Bidder and the project name clearly written or typed on the outside of the envelope. **NO FACSIMILIES OR EMAILS WILL BE ACCEPTED**.

Handicap access to the Whitman County Courthouse is available at the Mill Street Entrance.

The Project contemplated consists of improving the contact water collection and storage system and adding a fire suppression water holding tank at the Carothers Road Solid Waste Facility.

For information concerning this project, contact Mark Storey, Director/County Engineer at the Whitman County Department of Public Works – (509) 397-5204, or David Nails, Solid Waste & Recycling Director at the Carothers Road Solid Waste Facility – (509) 334-2400.

Notice to Proceed (NTP) will be granted no later than **August 14, 2017**. The Work shall be Substantially Complete within **90 calendar days** of NTP, and completed in all respects no later than **30 calendar days** after Substantial Completion is granted.

Once the contract is awarded, the Contractor is encouraged to receive submittal approval by the Engineer for tanks and lift stations and have them delivered to the site before receiving the NTP, based on known long lead times for these products. The County will work closely with the Contractor to provide an area for the Contractor's staging and material laydown before the NTP is granted.

Bidding Documents may be obtained from the *Issuing Office*: Whitman County Department of Public Works, 310 N. Main Street, Colfax, WA 99111 – (509) 397-6210, upon payment in the amount of $40.00 for each set. Only half size drawings will be provided in the hardcopy form of the Bidding Documents. Bidding Documents are also available in electronic form by downloading from www.whitmancounty.org. Engineer's computer-aided engineering (CAE) surfaces are not available for bidding. Return of the documents is not required, and the amount paid for hardcopies of the Bidding Documents is nonrefundable.

To receive bidding documents by mail, make arrangements with the Whitman County Department of Public Works for purchase and applicable shipping charges. Include a check or money order in the amount noted above, plus the applicable shipping costs. Any cause of delay for the Contractor not receiving documents in time to bid the Project is not the responsibility of Whitman County.

Each Bid must be submitted on the prescribed (enclosed) Bid Form and accompanied by a Bid Security as stated in the Instruction to Bidders.

The successful Bidder will be required to furnish the additional bond(s) and insurance as required in the Bidding Documents.

In order to be eligible to submit a Bid on public work in the State of Washington, Bidders and their Subcontractor(s) shall hold such licenses and registrations as required in the Revised Code of Washington (RCW), and all federal and local Laws and Regulations.

Bidders are required to comply with the State of Washington RCW 39.30.060 requirements as they relate to identification of Subcontractors.

Each Bidder shall submit as part of their Bid, the names of all Subcontractors for the performance categories of Work designated on the list to be provided with the Bid or whose subcontract is more than 10% of the Contract Price with whom the Bidder, if awarded the Contract, will subcontract the Work. The Bidder shall indicate by naming itself for any categories of Work that the Contractor will self-perform. Failure to name such Subcontractors or itself will render the Bidder's Bid nonresponsive, and therefore, null and void.

A **mandatory** Pre-Bid Conference will be held at **10 am Pacific Time, on Thursday, April 6, 2017** at the Carothers Road Solid Waste Facility (252 Landfill Road, Pullman, WA 99163). Representatives of the Owner and Engineer will be present to discuss the Project. Bidders are required to have a company representative attend the meeting in-person. Refer to the Instructions to Bidders for additional information.

The Owner reserves the right to reject any and all Bids, or any Bid not conforming to the intent and purpose of the Bidding Documents. No Bidder may withdraw their Bid within 60 days after the actual Bid Opening.

Mark Storey, PE
(Printed Name)

Public Works Director/County Engineer
(Title)

(Signature)

Published: March 23, 2017
March 30, 2017
April 6, 2017

END OF SECTION

INSTRUCTIONS TO BIDDERS

SECTION 00200

INSTRUCTIONS TO BIDDERS

NOTE TO BIDDER: USE TYPED PRINT OR INK (LEGIBLY WRITTEN) FOR COMPLETING THIS BID FORM.

ARTICLE 1 – DEFINED TERMS

1.01 Terms used in these Instructions to Bidders have the meanings indicated in the General Conditions and Supplementary Conditions. Additional terms used in these Instructions to Bidders have the meanings indicated below:

A. *Issuing Office* – The office from which the Bidding Documents are issued and where the bidding procedures are administered.

B. *Apparent Low Bidder* – The Bidder whose Bid as offered in the Bid Form represents the lowest total as determined by the Base Bid (without sales and use taxes).

C. *Successful Bidder* – Lowest, responsible and responsive Bidder to whom Owner (on the basis of Owner's evaluation as provided herein) makes an award.

ARTICLE 2 – COPIES OF BIDDING DOCUMENTS

2.01 Complete sets of the Bidding Documents may be obtained from the Issuing Office in the number, cost, and format stated in the Advertisement for Bids, or downloaded from the Owner's website.

2.02 Complete sets of Bidding Documents shall be used in preparing Bids; neither Owner nor Engineer assumes any responsibility for errors or misinterpretations resulting from the use of incomplete sets of Bidding Documents.

2.03 Drawings provided for Bidding may be reductions of the originals. The amount of reduction is indicated by measuring the scale bars on the drawings. Full-size drawings are only available for download from the Owner's website. Engineer's computer-aided engineering (CAE) design models are not available for bidding.

2.04 Owner and Engineer, in making copies of Bidding Documents available on the above terms, do so only for the purpose of obtaining Bids for the Work and do not authorize or confer a license for any other use.

ARTICLE 3 – QUALIFICATIONS OF BIDDERS

3.01 In order to perform public work in the State of Washington, the Bidder and all of its Subcontractors, prior to awarded of the contract or as otherwise required by the jurisdiction, shall hold or obtain such licenses as required by the State Statues, and federal and local Laws and Regulations.

3.02 To demonstrate Bidder's qualifications to perform the Work, Bidder shall submit with its Bid the Contractor's Qualification Form as provided in Section C-943. In addition, the Bidder shall provide within five (5) days of the Owner's request, written evidence such as financial data, other previous experience, present commitments, and other such data as requested by Owner. A Bidder's failure to submit required qualification information within the times indicated may disqualify Bidder from receiving an award of the Contract.

3.03 Per RCW 39.06.010, Bidders who violate RCW 50.12.070, 51.16.070, or 82.32.070, concerning payroll records and tax records within the last 2 years are prohibited from Bidding.

3.04 Bidder is advised to carefully review those portions of the Bid Form requiring Bidder's representations and certifications.

3.05 Other qualifications for Bidder and its Subcontractors are included in the applicable specifications sections.

ARTICLE 4 – REGISTRATION REQUIREMENTS

4.01 All Bidders, including the general contractor, subcontractors and specialty contractors shall be registered as Contractors by the State Department of Licenses in conformance with the requirements of applicable parts of Chapter 18.27 RCW.

ARTICLE 5 – SITE AND OTHER AREAS; EXISTING SITE CONDITIONS; EXAMINATION OF SITE; OWNER'S SAFETY PROGRAM; OTHER WORK AT THE SITE

5.01 *Site and Other Areas*

A. The Site is identified in the Bidding Documents. By definition, the Site includes rights-of-way, easements, and other lands furnished by Owner for the use of the Contractor. Any additional lands required for temporary construction facilities, construction equipment, or storage of materials and equipment, and any access needed for such additional lands, are to be obtained and paid for by Contractor.

5.02 *Existing Site Conditions*

A. Subsurface and Physical Conditions; Hazardous Environmental Conditions

1. The Supplementary Conditions identify:

a. those reports known to Owner of explorations and tests of subsurface conditions at or adjacent to the Site.

b. those drawings known to Owner of physical conditions relating to existing surface or subsurface structures at the Site (except Underground Facilities).

c. reports and drawings known to Owner relating to Hazardous Environmental Conditions that have been identified at or adjacent to the Site.

d. Technical Data contained in such reports and drawings.

2. Owner will make available to Bidders copies of reports and drawings referenced above for viewing at the Issuing Office. Such reports and drawings are not part of the Contract Documents, but the Technical Data contained therein upon whose accuracy Bidder is entitled to rely, as provided in the General Conditions, has been identified and established in the Supplementary Conditions. Bidder is responsible for any interpretation or conclusion Bidder draws from any Technical Data or any other data, interpretations, opinions, or information contained in such reports or shown or indicated in such drawings.

3. If the Supplementary Conditions do not identify Technical Data, the default definition of Technical Data set forth in Article 1 of the General Conditions will apply.

B. Underground Facilities: Information and data shown or indicated in the Bidding Documents with respect to existing Underground Facilities at or contiguous to the Site are set forth in the Contract Documents and are based upon information and data furnished to Owner and Engineer by owners of such Underground Facilities, including Owner, or others. The Contractor will be required to identify any and all utilities, and repairing any that are damaged by the Contractor.

C. Adequacy of Data: Provisions concerning responsibilities for the adequacy of data furnished to prospective Bidders with respect to subsurface conditions, other physical conditions, and Underground Facilities, and possible changes in the Bidding Documents due to differing or unanticipated subsurface or physical conditions appear in the General Conditions. Provisions concerning responsibilities for the adequacy of data furnished to prospective Bidders with respect to a Hazardous Environmental Condition at the Site, if any, and possible changes in the Contract Documents due to any Hazardous Environmental Condition uncovered or revealed at the Site which was not shown or indicated in the Drawings or Specifications or identified in the Contract Documents to be within the scope of the Work, appear in the General Conditions.

5.03 *Site Visit and Investigation/Testing by Bidders*

A. On request and Owner's approval of Bidder's exploration plan, Owner will provide Bidder access to the Site to conduct such additional examinations, investigations, explorations, tests, and studies as Bidder deems necessary for preparing and submitting a successful Bid. Owner will not have any obligation to grant such access if doing so is not practical because of existing operations, security or safety concerns, or restraints on Owner's authority regarding the Site.

B. Bidder shall comply with all applicable Laws and Regulations regarding excavation and location of utilities, obtain all permits, and comply with all terms and conditions established by Owner or by property owners or other entities controlling the Site with respect to schedule, access, existing operations, security, liability insurance, and applicable safety programs.

C. Bidder shall fill and compact all holes and clean up and restore the Site to its former condition upon completion of such explorations, investigations, tests, and studies.

5.04 *Owner's Safety Program*

A. Site visits and work at the Site may be governed by an Owner safety program. As the General Conditions indicate, if an Owner safety program exists, it will be noted in the Supplementary Conditions.

B. Contractor shall exercise safety at all times and for all portions of the Work. Refer to Section 01500, Construction and Temporary Facilities for a general description of safety and protection requirements that the Contractor shall institute while performing Work.

5.05 *Other Work at the Site*

A. Reference is made to Article 8 of the Supplementary Conditions for the identification of the general nature of other work of which Owner is aware (if any) that is to be performed at the Site by Owner or others (such as utilities and other prime contractors) and relates to the Work contemplated by these Bidding Documents. If Owner is party to a written contract for such other work, then on request, Owner will provide to each Bidder access to examine such contracts (other than portions thereof related to price and other confidential matters), if any.

ARTICLE 6 – BIDDER'S REPRESENTATIONS

6.01 It is the responsibility of each Bidder before submitting a Bid to:

A. examine and carefully study the Bidding Documents, and any data and reference items identified in the Bidding Documents;

B. visit the Site, conduct a thorough, alert visual examination of the Site and adjacent areas, and become familiar with and satisfy itself as to the general, local, and Site conditions that may affect cost, progress, and performance of the Work <u>including, but not limited to, those general and local conditions affecting transportation, disposal, handling and storage</u>

facilities, availability of labor, utilities, roads, climatic conditions and seasons, physical conditions at the Site and project area a whole, Site topography and ground conditions, equipment and facilities needed prior to and during execution of the Work;

C. become familiar with and satisfy itself as to all Laws and Regulations that may affect cost, progress, and performance of the Work;

D. carefully study all: (1) reports of explorations and tests of subsurface conditions at or adjacent to the Site and all drawings of physical conditions relating to existing surface or subsurface structures at the Site that have been identified in the Supplementary Conditions and/or Special Provisions, especially with respect to Technical Data in such reports and drawings, and (2) reports and drawings relating to Hazardous Environmental Conditions, if any, at or adjacent to the Site that have been identified in the Supplementary Conditions and/or Special Provisions, especially with respect to Technical Data in such reports and drawings;

E. consider the information known to Bidder itself; information commonly known to contractors doing business in the locality of the Site; information and observations obtained from visits to the Site; the Bidding Documents; and the Site-related reports and drawings identified in the Bidding Documents, with respect to the effect of such information, observations, and documents on (1) the cost, progress, and performance of the Work; (2) the means, methods, techniques, sequences, and procedures of construction to be employed by Bidder; and (3) Bidder's safety precautions and programs;

F. agree, based on the information and observations referred to in the preceding paragraph, that at the time of submitting its Bid no further examinations, investigations, explorations, tests, studies, or data are necessary for the determination of its Bid for performance of the Work at the price bid and within the times required, and in accordance with the other terms and conditions of the Bidding Documents;

G. become aware of the general nature of the work to be performed by Owner and others at the Site that relates to the Work as indicated in the Bidding Documents;

H. promptly give Engineer written notice of all conflicts, errors, ambiguities, or discrepancies that Bidder discovers in the Bidding Documents and confirm that the written resolution thereof by Engineer is acceptable to Bidder;

I. determine that the Bidding Documents are generally sufficient to indicate and convey understanding of all terms and conditions for the performance and furnishing of the Work; and

J. agree that the submission of a Bid will constitute an incontrovertible representation by Bidder that Bidder has complied with every requirement of this Article, that without exception the Bid and all prices in the Bid are premised upon performing and furnishing the Work required by the Bidding Documents.

ARTICLE 7 – PRE-BID CONFERENCE

7.01 A **mandatory** Pre-Bid conference will be held at the time and location stated in the Invitation for Bids. Representatives of Owner and Engineer will be present to discuss the Project. Bidders are required to attend and participate in the conference. Engineer will transmit to all prospective Bidders of record such Addenda as Engineer considers necessary in response to questions arising at the conference. Oral statements may not be relied upon and will not be binding or legally effective.

ARTICLE 8 – INTERPRETATIONS AND ADDENDA

8.01 All questions about the meaning or intent of the Bidding Documents are to be submitted to Owner in writing. Interpretations or clarifications considered necessary by Owner in response to such questions will be issued by Addenda delivered to all parties recorded as having received the Bidding Documents. Questions received less than five (5) days prior to the date for opening of Bids may not be answered. Only questions answered by Addenda will be binding. Oral and other interpretations or clarifications will be without legal effect.

8.02 Addenda may be issued to clarify, correct, supplement, or change the Bidding Documents.

8.03 Any addenda issued during the time of bidding must be covered in the Bid and included in the Contract Price in the Agreement. Receipt of each addendum must be acknowledged in the Bid. Any Bid in which all issued addenda are not acknowledged may be considered incomplete.

ARTICLE 9 – BID SECURITY

9.01 A Bid must be accompanied by Bid security made payable to Owner in an amount of five percent (5%) of Bidder's maximum Bid price (determined by adding the base bid and all alternates) and in the form of a certified check, bank money order, or a Bid bond (on the form included in the Bidding Documents) issued by a surety authorized to do business in Washington meeting the requirements of the General Conditions.

9.02 The Bid security of the Successful Bidder will be retained until Owner awards the contract to such Bidder, and such Bidder has executed the Contract Documents, furnished the required contract security, and met the other conditions of the Notice of Award, whereupon the Bid security will be released. If the Successful Bidder fails to execute and deliver the Contract Documents and furnish the required contract security within 15 days after the Notice of Award, Owner may consider Bidder to be in default, annul the Notice of Award, and the Bid security of that Bidder will be forfeited. Such forfeiture shall be Owner's exclusive remedy if Bidder defaults.

9.03 The Bid security of other Bidders that Owner believes to have a reasonable chance of receiving the award may be retained by Owner until the earlier of seven (7) days after the Effective Date of the Agreement or the number of days specified in the Article Bids to Remain Subject to Acceptance, whereupon Bid Security furnished by such Bidders will be returned.

ARTICLE 10 – CONTRACT TIMES

10.01 The number of days within which, or the dates by which, the Work is to be substantially completed and ready for final payment are set forth in the Agreement.

ARTICLE 11 – LIQUIDATED DAMAGES

11.01 Provisions for liquidated damages, if any, for failure to timely attain a Milestone, Substantial Completion, or completion of the Work in readiness for final payment, are set forth in the Agreement.

ARTICLE 12 – SUBSTITUTE AND "OR-EQUAL" ITEMS

12.01 The Contract for the Work, as awarded, will be on the basis of materials and equipment specified or described in the Bidding Documents without consideration during the bidding and Contract award process of possible substitute or "or-equal" items. In cases in which the Contract allows the Contractor to request that Engineer authorize the use of a substitute or "or-equal" item of material or equipment, application for such acceptance may not be made to and will not be considered by Engineer until after the Effective Date of the Contract.

12.02 Substitutes and "or-equal" materials and equipment may be proposed by Contractor in accordance with the General Conditions after the Effective Date of the Contract.

12.03 All prices that Bidder sets forth in its Bid shall be based on the presumption that the Contractor will furnish the materials and equipment specified or described in the Bidding Documents, as supplemented by Addenda. Any assumptions regarding the possibility of post-Bid approvals of "or-equal" or substitution requests are made at Bidder's sole risk.

ARTICLE 13 – SUBCONTRACTORS, SUPPLIERS, AND OTHERS

13.01 Bidder shall be prepared to retain specific Subcontractors, Suppliers, or other individuals or entities for the performance of the Work if required by the Bidding Documents (most commonly in the Specifications) to do so. If a prospective Bidder objects to retaining any such Subcontractor, Supplier, or other individual or entity, and the concern is not relieved by an Addendum, then the prospective Bidder should refrain from submitting a Bid.

13.02 Subsequent to the submittal of the Bid, Owner may not require the Successful Bidder or Contractor to retain any Subcontractor, Supplier, or other individual or entity against which Contractor has reasonable objection.

13.03 If requested by Owner, such list shall be accompanied by an experience statement with pertinent information regarding similar projects and other evidence of qualification for each such Subcontractor, Supplier, or other individual or entity. If Owner or Engineer, after due investigation, has reasonable objection to any proposed Subcontractor, Supplier, individual, or entity, Owner may, before the Notice of Award is given, request apparent Successful Bidder to submit an acceptable substitute, in which case apparent Successful Bidder shall submit a substitute, Bidder's Bid price will be increased (or decreased) by the difference in cost occasioned by such substitution, and Owner may consider such price adjustment in evaluating Bids and making the Contract award.

13.04 If apparent Successful Bidder declines to make any such substitution, Owner may award the Contract to the next lowest Bidder that proposes to use acceptable Subcontractors, Suppliers, or other individuals or entities. Declining to make requested substitutions will constitute grounds for forfeiture of the Bid security of any Bidder. Any Subcontractor, Supplier, individual, or entity so listed and against which Owner or Engineer makes no written objection prior to the giving of the Notice of Award will be deemed acceptable to Owner and Engineer subject to subsequent revocation of such acceptance as provided in Paragraph 7.06 of the General Conditions.

ARTICLE 14 – EMPLOYMENT REQUIREMENTS

14.01 Minority Business: In accordance with RCW 35.22.650, Bidder agrees that it shall actively solicit Bids for subcontracting goods and services from qualified minority businesses. Bidder shall furnish evidence of its compliance with these requirements of minority employment and solicitation. Bidder further agrees to consider the grant of subcontractors to minority bidders when substantially equal proposals are received. **Bidder shall submit compliance with this requirement as part of the Bid.**

ARTICLE 15 – WAGE RATES

15.01 The Work under these Bidding Documents is be paid for by public funds, and therefore, minimum prevailing wage rates for Whitman County as published by Washington State Department of Labor and Industries are applicable. The awarded Bidder need to provide a Statement of Prevailing Wage on Public Works Contract, and Affidavit of Wages Paid. Refer to the Supplementary Conditions for more information.

ARTICLE 16 – PREPARATION OF BID

16.01 With each copy of the Bidding Documents, Bidder will be furnished one separate copy of the of the Bid Form, and if applicable, the Bid Bond Form. No substitutions of the Bid Form will be allowed.

16.02 The Bid Form is included with the Bidding Documents.

A. All blanks on the Bid Form shall be completed in ink and the Bid Form signed in ink. Erasures or alterations shall be initialed in ink by the person signing the Bid Form. A Bid price shall be indicated for each section, Bid item, alternate, adjustment unit price item, and unit price item listed therein.

B. If the Bid Form expressly indicates that submitting pricing on a specific alternate item is optional, and Bidder elects to not furnish pricing for such optional alternate item, then Bidder may enter the words "No Bid" or "Not Applicable."

16.03 A Bid by a corporation shall be executed in the corporate name by a corporate officer (whose title must appear under the signature), accompanied by evidence of authority to sign. The corporate address and state of incorporation shall be shown.

16.04 A Bid by a limited liability company shall be executed in the name of the firm by a member or other authorized person and accompanied by evidence of authority to sign. The state of formation of the firm and the official address of the firm shall be shown.

16.05 A Bid by an individual shall show the Bidder's name and official address.

16.06 A Bid by a joint venture shall be executed by an authorized representative of each joint venturer in the manner indicated on the Bid Form. The official address of the joint venture shall be shown.

16.07 All names shall be printed in ink below the signatures.

16.08 The Bid shall contain an acknowledgment of receipt of all Addenda, the numbers of which shall be filled in on the Bid Form.

16.09 Postal and e-mail addresses and telephone number for communications regarding the Bid shall be shown.

16.10 The Bid shall contain evidence of Bidder's authority and qualification to do business in the State of Washington, or Bidder shall covenant in writing to obtain such authority and qualification prior to award of the Contract and attach such covenant to the Bid. Bidder's current Washington Contractor's registration number and class shall also be shown on the Bid Form.

ARTICLE 17 – BASIS OF BID; COMPARISON OF BIDS

17.01 The Base Bid is the total of the Lump Sum (LS) bid items and the Unit Price (UP) bid items as stated on the Bid Form (before sales and use tax). The bid items shall include all overhead and profit, and all other applicable costs for performing and administering the Work.

17.02 *Unit Price <u>and/or Lump Sum</u>*

A. Lump Sum (LS) - Bidders shall submit a Bid for each lump sum item of Work listed in the bid schedule included in the Bid Form. The extended total of the lump sum items shall be provided totaling all lump sum items.

B. Unit Price (UP):

1. Bidders shall submit a Bid for each unit price item of Work listed in the bid schedule included in the Bid Form. The extended total of the unit price items shall be provided totaling all unit price items.

2. The "Bid Price" (sometimes referred to as the extended price) for each unit price Bid item will be the product of the "Estimated Quantity" (which Owner or its representative has set forth in the Bid Form) for the item and the corresponding "Bid Unit Price" offered by the Bidder. The total of all unit price Bid items will be the sum of these "Bid Prices." The final quantities and Contract Price will be determined in accordance with Paragraph 13.03 of the General Conditions.

17.03 The Bid will not be considered unless the Bid Form is complete, containing all unit prices and/or lump sum prices for each Bid item included in the Bid Form, and Bids and totals are shown legibly in their proper locations. The total amount of the Bid shall be legibly written and numerically presented in the proper place, and the Bid Form shall be manually signed.

17.04 Discrepancies between the multiplication of units of Work and unit prices will be resolved in favor of the unit prices. Discrepancies between the indicated sum of any column of figures and the correct sum thereof will be resolved in favor of the correct sum.

ARTICLE 18 – SUBMITTAL OF BID

18.01 Refer to Advertisement for Bids for instructions regarding the submission of bids.

18.02 Bidders shall complete and provide the following with its Bid:

A. Bid Form

B. Bid Bond

C. Contractor's Qualification Form

D. Certificate of Insurance

E. Contractor's Affidavit – Affidavit of Individual, Copartnership, or Corporation

F. Evidence of Signature Authority to Bind Company

G. Agreement to Affirmative Action

H. Noncollusion Affidavit

I. Acknowledgement of Receipt of Addenda (on the Bid Form)

J. Statement for compliance with the minority business employment requirements

K. Bidders List of Subcontractors and Suppliers (on the Bid Form)

L. Evidence of authority to do business in the State of Washington (Contractors License No.) (on the Bid Form), or written covenant to obtain such license within the time for acceptance of Bids.

ARTICLE 19 – MODIFICATION AND WITHDRAWAL OF BID

19.01 A Bid may be withdrawn by an appropriate document duly executed in the same manner that a Bid must be executed and delivered to the place where Bids are to be submitted prior to the date and time for the opening of Bids. Upon receipt of such notice, the unopened Bid will be returned to the Bidder.

19.02 If a Bidder wishes to modify its Bid prior to Bid opening, Bidder must withdraw its initial Bid in the manner specified in Paragraph 19.01 and submit a new Bid prior to the date and time for the opening of Bids.

ARTICLE 20 – OPENING OF BIDS

20.01 Bids will be opened at the time and place indicated in the Advertisement for Bids, and unless obviously non-responsive, read aloud publicly. An abstract of the amounts of the base Bids and major alternates, if any, will be made available to Bidders after the opening of Bids.

ARTICLE 21 – BIDS TO REMAIN SUBJECT TO ACCEPTANCE

21.01 All Bids will remain subject to acceptance for the period of time stated in the Bid Form, but Owner may, in its sole discretion, release any Bid and return the Bid security prior to the end of this period.

ARTICLE 22 – EVALUATION OF BIDS AND AWARD OF CONTRACT

22.01 Owner reserves the right to reject any or all Bids, including without limitation, nonconforming, nonresponsive, unbalanced, or conditional Bids. Owner will reject the Bid of any Bidder that Owner finds, after reasonable inquiry and evaluation, to not be responsible. If Bidder purports to add terms or conditions to its Bid, takes exception to any provision of the Bidding Documents, or attempts to alter the contents of the Contract Documents for purposes of the Bid, then the Owner will reject the Bid as nonresponsive; provided that Owner also reserves the right to waive all minor informalities not involving price, time, or changes in the Work.

22.02 If Owner awards the contract for the Work, such award shall be to the responsible Bidder submitting the lowest responsive Bid.

22.03 Evaluation of Bids

A. In evaluating Bids, Owner will consider whether or not the Bids comply with the prescribed requirements, and such alternates, unit prices, and other data, as may be requested in the Bid Form or prior to the Notice of Award.

B. More than one Bid for the same Work from an individual or entity under the same or different names will not be considered. Reasonable grounds for believing any Bidder has an interest in more than one Bid for the Work may cause for disqualification of that Bidder and the rejection of all Bids in which that Bidder has an interest.

22.04 In evaluating whether a Bidder is responsible, Owner will consider the qualifications of the Bidder and may consider the qualifications and experience of Subcontractors and Suppliers proposed for those portions of the Work for which the identity of Subcontractors and Suppliers must be submitted as provided in the Bidding Documents.

22.05 Owner may conduct such investigations as Owner deems necessary to establish the responsibility, qualifications, and financial ability of Bidders and any proposed Subcontractors or Suppliers.

22.06 If the Contract is not awarded, Owner will award the Contract whose Bid is in the best interest of the Project.

ARTICLE 23 – BONDS AND INSURANCE

23.01 Article 6 of the General Conditions, as may be modified by the Supplementary Conditions, sets forth Owner's requirements as to performance and payment bonds and insurance. When the Successful Bidder delivers the Agreement (executed by Successful Bidder) to Owner, it shall be accompanied by required bonds and insurance documentation.

ARTICLE 24 – SIGNING OF AGREEMENT

24.01 When Owner issues a Notice of Award to the Successful Bidder, it shall be accompanied by the unexecuted counterparts of the Agreement along with the other Contract Documents as identified

in the Agreement. Within fifteen (15) days thereafter, Successful Bidder shall execute and deliver the required number of counterparts of the Agreement (and any bonds and insurance documentation required to be delivered by the Contract Documents) to Owner. Within twenty (20) days thereafter, Owner shall deliver one fully executed counterpart of the Agreement to Successful Bidder, together with printed and electronic copies of the Contract Documents.

ARTICLE 25 – SALES AND USE TAX

25.01 Applicable sales and use tax shall not be included in the Base Bid. An estimate of sales and use tax along with an estimate of the project total shall be provided on the Bid Form.

ARTICLE 26 – RETAINAGE

26.01 Provisions concerning retainage and Contractor's rights to deposit securities in lieu of retainage, if applicable, are set forth in the Agreement.

END OF SECTION

BID FORM

SECTION 00400

BID FORM

ARTICLE 1 – BID RECIPIENT

1.01 This Bid shall be submitted to:

To:	Whitman County Board of County Commissioners
Project:	Carothers Road Solid Waste Facility Contact Water and Fire Suppression Water Holding Tanks Project
Bid No.	XEW31

1.02 The undersigned Bidder proposes and agrees, if this Bid is accepted, to enter into an Agreement with Owner in the form included in the Bidding Documents to perform all Work as specified or indicated in the Bidding Documents for the prices and within the times indicated in this Bid and in accordance with the other terms and conditions of the Bidding Documents.

ARTICLE 2 – BIDDER'S ACKNOWLEDGEMENTS

2.01 Bidder accepts all of the terms and conditions of the Advertisement for Bids, including without limitation those dealing with the disposition of Bid security. This Bid will remain subject to acceptance for 60 days after the Bid opening, or for such longer period of time that Bidder may agree to in writing upon request of Owner.

ARTICLE 3 – BIDDER'S REPRESENTATIONS

3.01 In submitting this Bid, Bidder represents that:

A. Bidder has examined and carefully studied the Bidding Documents, and any data and reference items identified in the Bidding Documents, and hereby acknowledges receipt of the following Addenda:

Addendum No.	**Addendum Date**
_____	_____
_____	_____
_____	_____
_____	_____

B. Bidder has visited the Site, conducted a thorough, alert visual examination of the Site and adjacent areas, and become familiar with and satisfied itself as to the general, local, and Site conditions that may affect cost, progress, and performance of the Work.

C. Bidder is familiar with and has satisfied itself as to all Laws and Regulations that may affect cost, progress, and performance of the Work.

D. Bidder has carefully studied all: (1) reports of explorations and tests of subsurface conditions at or adjacent to the Site and all drawings of physical conditions relating to existing surface or subsurface structures at the Site that have been identified in the Supplementary Conditions, especially with respect to Technical Data in such reports and drawings, and (2) reports and drawings relating to Hazardous Environmental Conditions, if any, at or adjacent

to the Site that have been identified in the Supplementary Conditions, especially with respect to Technical Data in such reports and drawings.

E. Bidder has considered the information known to Bidder itself; information commonly known to contractors doing business in the locality of the Site; information and observations obtained from visits to the Site; the Bidding Documents; and any Site-related reports and drawings identified in the Bidding Documents, with respect to the effect of such information, observations, and documents on (1) the cost, progress, and performance of the Work; (2) the means, methods, techniques, sequences, and procedures of construction to be employed by Bidder; and (3) Bidder's safety precautions and programs.

F. Bidder is aware of the general nature of work to be performed by Owner and others at the Site that relates to the Work as indicated in the Bidding Documents.

G. Bidder has given Engineer written notice of all conflicts, errors, ambiguities, or discrepancies that Bidder has discovered in the Bidding Documents, and confirms that the written resolution thereof by Engineer is acceptable to Bidder.

H. The Bidding Documents are generally sufficient to indicate and convey understanding of all terms and conditions for the performance and furnishing of the Work.

I. The submission of this Bid constitutes an incontrovertible representation by Bidder that Bidder has complied with every requirement of this Article, and that without exception the Bid and all prices in the Bid are premised upon performing and furnishing the Work required by the Bidding Documents.

ARTICLE 4 – BIDDER'S CERTIFICATION

4.01 Bidder certifies that:

A. This Bid is genuine and not made in the interest of or on behalf of any undisclosed individual or entity and is not submitted in conformity with any collusive agreement or rules of any group, association, organization, or corporation;

B. Bidder has not directly or indirectly induced or solicited any other Bidder to submit a false or sham Bid;

C. Bidder has not solicited or induced any individual or entity to refrain from bidding; and

D. Bidder has not engaged in corrupt, fraudulent, collusive, or coercive practices in competing for the Contract. For the purposes of this Paragraph 4.01.D:

1. "corrupt practice" means the offering, giving, receiving, or soliciting of anything of value likely to influence the action of a public official in the bidding process;

2. "fraudulent practice" means an intentional misrepresentation of facts made (a) to influence the bidding process to the detriment of Owner, (b) to establish bid prices at artificial non-competitive levels, or (c) to deprive Owner of the benefits of free and open competition;

3. "collusive practice" means a scheme or arrangement between two or more Bidders, with or without the knowledge of Owner, a purpose of which is to establish bid prices at artificial, non-competitive levels; and

4. "coercive practice" means harming or threatening to harm, directly or indirectly, persons or their property to influence their participation in the bidding process or affect the e execution of the Contract.

4.02 The sales and use tax is separately itemized for this Project. The amount of such tax is not a competitive Bid Item and will not be used in determining the lowest priced Bid as it is considered an estimate for what the taxes the Contractor will be obligated to pay.

ARTICLE 5 – NAMING OF SUBCONTRACTORS

5.01 Bidder agrees to submit as part of its Bid the names of Subcontractors (and Suppliers) with whom Bidder, if awarded the Contract, will subcontract Work to for the categories listed, or for those that will perform ten (10) percent or more of the Contract Price. If Contractor plans to self-perform the Work, Contractor shall name themselves in the list. Bidder acknowledges that failure to name such Subcontractors or itself shall render Bidder's Bid nonresponsive, and therefore, null and void. Refer to the applicable specification sections for minimum experience (qualifications), where applicable.

Bidder's List of Subcontractors and Suppliers				
Category of Work	**Company Name**	**Address**	**WA Contractor's Registration***	**Subcontract Amount**
Site Civil/Earthwork				
Contact Water and Fire Water Holding Tanks Supplier			_____*	
Contact Water and Fire Suppression Water Holding Tanks Installer				
Lift Stations and Pumps (Package Systems) Supplier			_____*	
Lift Stations and Pumps (Package Systems) Installer				
Concrete Embedment Liner Supplier/Installer/Seaming				
HDPE Pipe Supplier			_____*	
HDPE Pipe Welder				
Stainless Steel Pipe Supplier			_____*	
Stainless Steel Pipe Fitter/Welder				
Formwork/Rebar/Finish-work				
Concrete Supplier			_____*	
Concrete Installer				
Others:				
*Not required for suppliers.				

ARTICLE 6 – BASIS OF BID

6.01 Bidder will complete the Work in accordance with the Contract Documents for the following price(s):

6.02 Lump Sum Bid Schedule:

A. Lump Sum (LS) Work: Bidder agrees to accept payment for individual Lump Sum Work items as included in the Bidding Documents based on the undersigned's own estimate of quantities and costs including all overhead and profit, and other operating and administrative costs.

B. Lump Sum (LS) Bid Items:

Lump Sum (LS) Bid Schedule Table		
Item ID*	**Item Description**	**Bid Price**
LS-1	General Conditions	$
LS-2	Temporary Facilities and Controls	$
LS-3	Site Preparation	$
LS-4	General Site/Yard Work	$
LS-5	Contact Water Tanks	$
LS-6	Contact Water Lift Station	$
LS-7	Lined Concrete Evaporation Basin	$
LS-8	Building Drain Lift Station	$
LS-9	Fire Suppression Water Holding Tank	$
LS-10	Yard Piping and Valves	$
	Total Lump Sum (LS) Bid Items	**$**
*Refer to Section 01100, SUMMARY OF WORK, for a description of Bid Items, and Section 01275, MEASUREMENT AND PAYMENT, for how items will be measured and paid.		

6.03 Basis of Bid Summary

Total of Lump Sum (LS) Bid Items* $_____

Sales and Use Tax (Estimate) $_____

Total Project Cost (Estimate) $_____

**Base Bid - Basis for Contractor Selection*

ARTICLE 7 – TIME OF COMPLETION

7.01 Bidder agrees that the Work will be substantially complete within **90 calendar days** of NTP and will be completed and ready for final payment in accordance with Paragraph 15.06 of the General Conditions no more than **30 calendar days** after Substantial Completion is granted. Notice to Proceed will be granted no later than **August 14, 2017**.

7.02 Bidder further accepts the provisions of the Agreement as to liquidated damages and payments to Owner for Unscheduled Employment of the Engineer (Engineer's Overtime).

ARTICLE 8 – ATTACHMENTS TO THIS BID

8.01 Refer to Instructions to Bidders for a list of attachments that must accompany the Bid.

ARTICLE 9 – SURETY

9.01 If Bidder is awarded the construction contract for this Bid. The surety company who will provide the Performance and Payment Bonds will be:

_____, whose address is

_____

Street City State Zip

ARTICLE 10 – BID SUBMITTAL

BIDDER: *[Indicate legal name of bidding entity]*

_____

By:
[Signature] _____

[Printed name] _____
(If Bidder is a corporation, a limited liability company, a partnership, or a joint venture, attach evidence of authority to sign.)

Attest:
[Signature] _____

[Printed name] _____

Title: _____

Submittal Date: _____

Physical address for giving notices:

_____

_____

_____

Telephone Number: _____

Fax Number: _____

Contact Name and e-mail address: _____

_____

Washington Contractor's License No.: _____

Contractor's License Class (where applicable) _____

END OF SECTION

BID BOND

Any singular reference to Bidder, Surety, Owner or other party shall be considered plural where applicable.

BIDDER *(Name and Address)*:

SURETY *(Name, and Address of Principal Place of Business)*:

OWNER *(Name and Address)*:

BID
Bid Due Date:
Description *(Project Name— Include Location)*:

BOND
Bond Number:
Date:
Penal sum _____ $ _____
(Words) (Figures)

Surety and Bidder, intending to be legally bound hereby, subject to the terms set forth below, do each cause this Bid Bond to be duly executed by an authorized officer, agent, or representative.

BIDDER	**SURETY**
_____ (Seal)	_____ (Seal)
Bidder's Name and Corporate Seal	Surety's Name and Corporate Seal
By: _____	By: _____
Signature	Signature (Attach Power of Attorney)
_____	_____
Print Name	Print Name
_____	_____
Title	Title
Attest: _____	Attest: _____
Signature	Signature
Title	Title

Note: Addresses are to be used for giving any required notice.
Provide execution by any additional parties, such as joint venturers, if necessary.

1. Bidder and Surety, jointly and severally, bind themselves, their heirs, executors, administrators, successors, and assigns to pay to Owner upon default of Bidder the penal sum set forth on the face of this Bond. Payment of the penal

sum is the extent of Bidder's and Surety's liability. Recovery of such penal sum under the terms of this Bond shall be Owner's sole and exclusive remedy upon default of Bidder.

2. Default of Bidder shall occur upon the failure of Bidder to deliver within the time required by the Bidding Documents (or any extension thereof agreed to in writing by Owner) the executed Agreement required by the Bidding Documents and any performance and payment bonds required by the Bidding Documents.

3. This obligation shall be null and void if:

3.1 Owner accepts Bidder's Bid and Bidder delivers within the time required by the Bidding Documents (or any extension thereof agreed to in writing by Owner) the executed Agreement required by the Bidding Documents and any performance and payment bonds required by the Bidding Documents, or

3.2 All Bids are rejected by Owner, or

3.3 Owner fails to issue a Notice of Award to Bidder within the time specified in the Bidding Documents (or any extension thereof agreed to in writing by Bidder and, if applicable, consented to by Surety when required by Paragraph 5 hereof).

4. Payment under this Bond will be due and payable upon default of Bidder and within 30 calendar days after receipt by Bidder and Surety of written notice of default from Owner, which notice will be given with reasonable promptness, identifying this Bond and the Project and including a statement of the amount due.

5. Surety waives notice of any and all defenses based on or arising out of any time extension to issue Notice of Award agreed to in writing by Owner and Bidder, provided that the total time for issuing Notice of Award including extensions shall not in the aggregate exceed 120 days from the Bid due date without Surety's written consent.

6. No suit or action shall be commenced under this Bond prior to 30 calendar days after the notice of default required in Paragraph 4 above is received by Bidder and Surety and in no case later than one year after the Bid due date.

7. Any suit or action under this Bond shall be commenced only in a court of competent jurisdiction located in the state in which the Project is located.

8. Notices required hereunder shall be in writing and sent to Bidder and Surety at their respective addresses shown on the face of this Bond. Such notices may be sent by personal delivery, commercial courier, or by United States Registered or Certified Mail, return receipt requested, postage pre-paid, and shall be deemed to be effective upon receipt by the party concerned.

9. Surety shall cause to be attached to this Bond a current and effective Power of Attorney evidencing the authority of the officer, agent, or representative who executed this Bond on behalf of Surety to execute, seal, and deliver such Bond and bind the Surety thereby.

10. This Bond is intended to conform to all applicable statutory requirements. Any applicable requirement of any applicable statute that has been omitted from this Bond shall be deemed to be included herein as if set forth at length. If any provision of this Bond conflicts with any applicable statute, then the provision of said statute shall govern and the remainder of this Bond that is not in conflict therewith shall continue in full force and effect.

11. The term "Bid" as used herein includes a Bid, offer, or proposal as applicable.

CONTRACTOR'S QUALIFICATIONS FORM

The Owner requires a statement as to financial ability, equipment, and experience to be completed and submitted by Prospective Contractors bidding on this Project. This form shall be submitted as part of the Bid in accordance with the Advertisement for Bids and Instructions to Bidders.

Submitted to: Whitman County Board of County Commissioners

By:_____ A Corporation
(Contractor) A Copartnership
An Individual

Type of Work: _____

Principal Office: _____

Contractor's Surety: _____

Contractor's Bank and Local Contact: _____

EXPERIENCE QUESTIONNAIRE

1. How many years has your organization been in business as a contractor under your present business name? _____

2. How many years' experience in the proposed type and size of construction work has your organization had as general contractor? _____

3. List the most recent projects your organization has had in construction work similar in type and size to the work proposed herein:

Contract Amount	**Class of Work**	**When Completed**	**Name & Address of Owner/Reference Contact**

4. What other important projects has your organization completed?

Contract Amount	Class of Work	When Completed	Name & Address of Owner/Reference Contact

5. Have you ever failed to complete any work awarded to you?_____ If so, where and why?

_____

_____

_____

6. Name the Surety Company, and the name and address of the local agent you expect to use in the event this contract is awarded to you: _____

_____

_____

_____

7. What is the construction experience of the individuals that will be involved in this project:

Individual's Name	Present Position or Office	Years of Construction Experience	Magnitude and Type of Work	In What Capacity

8. List the major items of equipment which you own or which will be available for use on the proposed project:_____

_____

_____

_____

9. List below the contracts which you, or your company, or corporation were party, during the previous 10 years which contracts were involved in litigation of any type: _____

_____

_____

_____

_____

_____

_____

10. Will you, upon request, fill out a detailed financial statement and furnish any other information that may be required by Owner? Yes___ No___

By: _____

Title: _____

Date: _____

END OF SECTION

NONCOLLUSION AFFIDAVIT

STATE OF _____}
}ss.
COUNTY OF _____}

_____ being first duly sworn, deposes and says that he is _____
(sole owner, a partner, president, secretary, etc.)

of_____the party making the foregoing bid; that such bid is not made in the interest of or on behalf of any undisclosed person, partnership, company, association, organization, or corporation; that such bid is genuine and not collusive or sham; that said Bidder has not directly or indirectly induced or solicited any other Bidder to put in a false or sham bid, and has not directly or indirectly colluded, conspired, connived, or agreed with any Bidder or anyone else to put in a sham bid, nor that anyone shall refrain from bidding; that said Bidder has not in any manner, directly or indirectly, sought by agreement, communication, or conference with anyone to fix the bid price of said Bidder or any other Bidder, nor to fix any overhead, profit, or cost element of such bid price, nor of that of any other Bidder, nor to secure any advantage against the public body awarding the Contract or anyone interested in the proposed Contract; that all statements contained in such bid are true; and, further, that said Bidder has not directly or indirectly, submitted his bid price or any breakdown thereof, nor the contents thereof, nor divulged therewith to any corporation, partnership, company, association, organization, bid depository, nor to any member or agent thereof, nor to any other individual except to such person or persons as have a partnership or other financial interest with said Bidder in his general business.

Signed: _____

Title: _____

Subscribed and sworn to before me this _____ day of _____, 20_____

My commission expires: _____

_____Notary Public

END OF SECTION

CONTRACTOR'S AFFIDAVIT
AFFIDAVIT FOR INDIVIDUAL

STATE OF _____}
}ss.
COUNTY OF _____}

I _____ being duly sworn, depose and say that the foregoing financial statement, taken from my books, is a true and accurate statement of my financial condition as of the date thereof, and that the answers to the interrogatories contained therein are true; that the statements and answers to the interrogatories of the equipment questionnaire are correct and true as of the date of this affidavit; and that the. statements and answers to the interrogatories of the foregoing experience questionnaire are correct and true as of the date of this affidavit.

_____
(Applicant must also sign here)

Subscribed and sworn to before me this _____ day of _____, 20_____

My commission expires: _____

_____Notary Public

END OF SECTION

CONTRACTOR'S AFFIDAVIT
AFFIDAVIT FOR COPARTNERSHIP

STATE OF _____}
}ss.
COUNTY OF _____}

I _____ being duly sworn, depose and say that I am a member of the firm of _____ taken from the books of said firm, is a true and accurate statement of the financial condition of said firm as of the date thereof, and that the answers to the interrogatories contained therein are true; that the statements and answers to the interrogatories of the equipment questionnaire are correct and true as of the date of this affidavit; and that the statements and answers to the interrogatories of the foregoing experience questionnaire are correct and true as of the date of this affidavit.

_____
(Member of firm must also sign here)

Subscribed and sworn to before me this _____ day of _____, 20_____

My commission expires: _____

_____Notary Public

END OF SECTION

CONTRACTOR'S AFFIDAVIT
AFFIDAVIT FOR CORPORATION

STATE OF _____}
}ss.
COUNTY OF _____}

I _____ being duly sworn, depose and

say that I am _____

of the _____the corporation described herein and which executed the foregoing statement; that I am familiar with the books of the said corporation showing its financial condition; that the foregoing financial statement, taken from the books of said corporation, is a true and accurate statement of the financial condition of said corporation as of the date thereof, and that the answers to the interrogatories of the equipment questionnaire are correct and true as of the date of this affidavit; and that the statements and answers to the interrogatories of the foregoing experience questionnaire are correct and true as of the date of this affidavit.

_____
(Officer must also sign here)

Subscribed and sworn to before me this _____ day of _____, 20_____

My commission expires: _____

_____Notary Public

END OF SECTION

AGREEMENT TO AFFIRMATIVE ACTION

As officers and representatives of _____ we, the undersigned have read and fully agree to comply with all applicable laws and contract requirements for affirmative action to ensure Equal Employment Opportunity.

_____
Signature

_____ _____
Title Date

_____
Signature

_____ _____
Title Date

END OF SECTION

PART 2

CONTRACTING REQUIREMENTS

AGREEMENT FORM

SECTION 00500

AGREEMENT BETWEEN OWNER AND CONTRACTOR FOR CONSTRUCTION CONTRACT

THIS AGREEMENT is by and between _____ ("Owner") and _____ ("Contractor").

Owner and Contractor hereby agree as follows:

ARTICLE 1 – WORK

1.01 Contractor shall complete all Work as specified or indicated in the Contract Documents.

ARTICLE 2 – THE PROJECT

2.01 The Project, of which the Work under the Contract Documents is a part, is generally described as follows:

A. Installation of contact water tanks; contact water pipes, lift stations, and associated other infrastructure, monitoring systems and controls; grading and drainage; and installation of a fire suppression water holding tank and associated systems and controls.

ARTICLE 3 – ENGINEER

3.01 The Project has been designed by Great West Engineering, Inc.

3.02 The Owner has retained Great West Engineering, Inc. ("Engineer") to act as the Owner's representative on a periodic basis, assume all duties and responsibilities and have the rights and authority assigned to Engineer in the Contract Documents. The Owner will have an Owner's Site Representative as stated in the Contract Documents.

ARTICLE 4 – CONTRACT TIMES

4.01 *Time of the Essence*

A. All time limits for Substantial Completion, and completion and readiness for final payment as stated in the Contract Documents are of the essence of the Contract.

4.02 *Contract Times: Dates*

A. Notice to proceed (NTP) will be provided no later than **August 14, 2017.** The Work shall be substantially complete within **90 calendar days of NTP**, and completed and ready for final payment in accordance with Paragraph 15.06 of the General Conditions no later than **30 calendar days** after Substantial Completion is granted.

4.03 *Liquidated Damages*

A. Contractor and Owner recognize that time is of the essence as stated in Paragraph 4.01 above and that Owner will suffer financial and other losses if the Work is not completed and Milestones not achieved within the times specified in Paragraph 4.02 above, plus any extensions thereof allowed in accordance with the Contract. The parties also recognize the delays, expense, and difficulties involved in proving in a legal or arbitration proceeding the actual loss suffered by Owner if the Work is not completed on time. Accordingly, instead of

This document is a MODIFIED version of EJCDC® C-520, Copyright © 2013 by the National Society of Professional Engineers, American Council of Engineering Companies, and American Society of Civil Engineers. Those portions of the text that originated in published EJCDC documents remain subject to the copyright.

requiring any such proof, Owner and Contractor agree that as liquidated damages for delay (but not as a penalty):

1. Substantial Completion: Contractor shall pay Owner $1,000 for each day that expires after the time (as duly adjusted pursuant to the Contract) specified in Paragraph 4.02.A above for Substantial Completion until the Work is substantially complete.

2. Completion of Remaining Work: After Substantial Completion, if Contractor neglects, refuses, or fails to complete the remaining Work within the Contract Time (as duly adjusted pursuant to the Contract) for completion and readiness for final payment, Contractor shall pay Owner $500 for each day that expires after such time until the Work is completed and ready for final payment.

3. Liquidated damages for failing to timely attain Substantial Completion and final completion are not additive and will not be imposed at the same time. However, if Contractor does not meet the Substantial Completion date and then also does not meet the final completion date, the liquidated damages are imposable in a sequential manner.

4.04 *Special Damages*

A. In addition to the amount provided for liquidated damages, Contractor shall reimburse Owner (as payment off-set) for: (1) any fines or penalties imposed on Owner as a direct result of the Contractor's failure to attain Substantial Completion according to the Contract Times, and (2) for the actual costs reasonably incurred by Owner for engineering, construction observation, inspection, and administrative services needed after the time specified in Paragraph 4.02 for Substantial Completion (as duly adjusted pursuant to the Contract), until the Work is substantially complete.

B. After Contractor achieves Substantial Completion, if Contractor neglects, refuses, or fails to complete the remaining Work within the Contract Times, Contractor shall reimburse Owner for the actual costs reasonably incurred by Owner for engineering, construction observation, inspection and administrative services needed after the time specified in Paragraph 4.02 for Work to be completed and ready for final payment (as duly adjusted pursuant to the Contract), until such time that the Work is completed and ready for final payment.

ARTICLE 5 – CONTRACT PRICE

5.01 Owner shall pay Contractor for completion of the Work in accordance with the Contract Documents an amount equal to the sum of the established unit prices for each Bid item from the Bid Form multiplied by the actual quantity of the respective Bid item plus the amount for lump sum items constructed and accepted.

5.02 The extended prices for Unit Price Work set forth as of the Effective Date of the Contract are based on estimated quantities. As provided in Paragraph 13.03 of the General Conditions, estimated quantities are not guaranteed, and determinations of actual quantities and classifications are to be made by Engineer.

For Lump Sum Work:

_____Dollars
(Words)

and_____Cents $_____
(Words) (Figures)

Plus:

For Unit Price Work:

This document is a MODIFIED version of EJCDC® C-520, Copyright © 2013 by the National Society of Professional Engineers, American Council of Engineering Companies, and American Society of Civil Engineers. Those portions of the text that originated in published EJCDC documents remain subject to the copyright.

_____Dollars
(Words)

and_____Cents $_____
(Words) (Figures)

Subtotal (Base Bid) – Lump Sum Work plus Unit Price Work:

_____Dollars
(Words)

and_____Cents $_____
(Words) (Figures)

Plus:

For Sales and Use Tax (Estimated):

_____Dollars
(Words)

and_____Cents $_____
(Words) (Figures)

For TOTAL Contract Price (Estimated):

_____Dollars
(Words)

and_____Cents $_____
(Words) (Figures)

ARTICLE 6 – PAYMENT PROCEDURES

6.01 *Submittal and Processing of Payments*

A. Contractor shall submit Applications for Payment in accordance with Article 15 of the General Conditions. Applications for Payment will be processed by Engineer as provided in the General Conditions.

6.02 *Progress Payments; Retainage*

A. Owner shall make progress payments on account of the Contract Price on the basis of Contractor's Applications for Payment on the date of each month as established in the Preconstruction Meeting during performance of the Work, provided that such Applications for Payment have been submitted in a timely manner and otherwise meet the requirements of the Contract. All such payments will be measured by the Schedule of Values established as provided in the General Conditions (and in the case of Unit Price Work based on the number of units completed) or, in the event there is no Schedule of Values, as provided elsewhere in the Contract.

1. Prior to Substantial Completion, progress payments will be made in an amount equal to the percentage indicated below but, in each case, less the aggregate of payments previously made and less such amounts as Owner may withhold, including but not limited to liquidated damages, in accordance with the Contract

a. Ninety percent (90%) of Work completed (with the balance being retainage). If the Work has been 50 percent completed as determined by the Engineer, and if the character and progress of the Work has been satisfactory to the Owner and Engineer, Owner, on recommendation of Engineer, may determine that as long as

This document is a MODIFIED version of EJCDC® C-520, Copyright © 2013 by the National Society of Professional Engineers, American Council of Engineering Companies, and American Society of Civil Engineers. Those portions of the text that originated in published EJCDC documents remain subject to the copyright.

the character of and progress of the Work remain satisfactory to them, there will be no retainage.

b. Ninety percent (90%) of cost of materials and equipment not incorporated in the Work (with the balance being retainage).

B. Upon Substantial Completion of the entire construction to be provided under the Contract Documents, Owner shall pay an amount sufficient to increase total payments to Contractor to ninety five percent (95%) of the Work completed, less such amounts set off by Owner pursuant to Paragraph 15.01.E of the General Conditions, and less one hundred percent (100%) of Engineer's estimate of the value of Work to be completed or corrected as shown on the punch list of items to be completed or corrected prior to final payment.

6.03 *Final Payment*

A. Upon final completion and acceptance of the Work in accordance with Paragraph 15.06 of the General Conditions, Owner shall pay the remainder of the Contract Price as recommended by Engineer as provided in said Paragraph 15.06.

ARTICLE 7 – CONTRACTOR'S REPRESENTATIONS

7.01 In order to induce Owner to enter into this Contract, Contractor makes the following representations:

A. Contractor has examined and carefully studied the Contract Documents, and any data and reference items identified in the Contract Documents.

B. Contractor has visited the Site, conducted a thorough, alert visual examination of the Site and adjacent areas, and become familiar with and is satisfied as to the general, local, and Site conditions that may affect cost, progress, and performance of the Work.

C. Contractor is familiar with and is satisfied as to all Laws and Regulations that may affect cost, progress, and performance of the Work.

D. Contractor has carefully studied all: (1) reports of explorations and tests of subsurface conditions at or adjacent to the Site and all drawings of physical conditions relating to existing surface or subsurface structures at the Site that have been identified in the Supplementary Conditions, especially with respect to Technical Data in such reports and drawings, and (2) reports and drawings relating to Hazardous Environmental Conditions, if any, at or adjacent to the Site that have been identified in the Supplementary Conditions, especially with respect to Technical Data in such reports and drawings.

E. Contractor has considered the information known to Contractor itself; information commonly known to contractors doing business in the locality of the Site; information and observations obtained from visits to the Site; the Contract Documents; and the Site-related reports and drawings identified in the Contract Documents, with respect to the effect of such information, observations, and documents on (1) the cost, progress, and performance of the Work; (2) the means, methods, techniques, sequences, and procedures of construction to be employed by Contractor; and (3) Contractor's safety precautions and programs.

F. Based on the information and observations referred to in the preceding paragraph, Contractor agrees that no further examinations, investigations, explorations, tests, studies, or data are necessary for the performance of the Work at the Contract Price, within the Contract Times, and in accordance with the other terms and conditions of the Contract.

G. Contractor is aware of the general nature of work to be performed by Owner and others at the Site that relates to the Work as indicated in the Contract Documents.

This document is a MODIFIED version of EJCDC® C-520, Copyright © 2013 by the National Society of Professional Engineers, American Council of Engineering Companies, and American Society of Civil Engineers. Those portions of the text that originated in published EJCDC documents remain subject to the copyright.

H. Contractor has given Engineer written notice of all conflicts, errors, ambiguities, or discrepancies that Contractor has discovered in the Contract Documents, and the written resolution thereof by Engineer is acceptable to Contractor.

I. The Contract Documents are generally sufficient to indicate and convey understanding of all terms and conditions for performance and furnishing of the Work.

J. Contractor's entry into this Contract constitutes an incontrovertible representation by Contractor that without exception all prices in the Agreement are premised upon performing and furnishing the Work required by the Contract Documents.

ARTICLE 8 – CONTRACT DOCUMENTS

8.01 *Contents*

A. The Contract Documents consist of the following:

1. This Agreement.
2. Advertisement for Bids.
3. Instructions to Bidders.
4. Bid Form.
5. Bid Bond.
6. Performance Bond.
7. Payment Bond.
8. General Conditions.
9. Supplementary Conditions.
10. Specifications as listed in the table of contents of the Contract Documents.
11. Drawings with each sheet bearing the following general title: Carothers Road Solid Waste Facility, Contact Water and Fire Suppression Water Holding Tanks Project.
12. Addenda.
13. Exhibits to this Agreement:
    a. Notice of Award.
    b. Acceptance of Notice of Award.
    c. Notice to Proceed
    d. Acceptance of Notice to Proceed
    e. Substantial Completion
    f. Lien Release Form
    g. Request to Sublet Work
    h. Contractor's Affidavit – Affidavit for Individual, Copartnership, or Corporation.
    i. Agreement to Affirmative Action
    j. Contractor's Qualification Form.
    k. Noncollusion Affidavit.
    l. Statement of Intent to Pay Prevailing Wage on Public Works Contract

This document is a MODIFIED version of EJCDC® C-520, Copyright © 2013 by the National Society of Professional Engineers, American Council of Engineering Companies, and American Society of Civil Engineers. Those portions of the text that originated in published EJCDC documents remain subject to the copyright.

m. Affidavit of Wages Paid on a Public Works Contract

n. The Construction Quality Assurance (CQA) Plan is attached to the Contract Documents as informational only. This document serves as a basis of permit conditions for the contact water tanks, lined concrete basin, and associated systems as regulated by the Washington State Department of Ecology. The Contractor shall coordinate with the Owner and the Owner's representative (Engineer) for the necessary observations and tests. All tests that are required will be the responsibility of the Contractor to implement, with approval by the Engineer, and with observation by the Owner and/or Engineer.

14. The following will be made available after the Effective Date of the Contract and are not attached hereto:

a. Submittal Transmittal Form.

b. Work Change Directive (WCD) Form.

c. Change Order (CO) Form.

d. Field Order (FO) Form.

e. Request for Information (RFI) Form.

f. Request for Quote (RFQ) Form.

B. There are no Contract Documents other than those listed in this Article 8.

C. The Contract Documents may only be amended, modified, or supplemented as provided in the General Conditions.

ARTICLE 9 – MISCELLANEOUS

9.01 *Terms*

A. Terms used in this Agreement will have the meanings stated in the General Conditions and the Supplementary Conditions.

9.02 *Assignment of Contract*

A. Unless expressly agreed to elsewhere in the Contract, no assignment by a party hereto of any rights under or interests in the Contract will be binding on another party hereto without the written consent of the party sought to be bound; and, specifically but without limitation, money that may become due and money that is due may not be assigned without such consent (except to the extent that the effect of this restriction may be limited by law), and unless specifically stated to the contrary in any written consent to an assignment, no assignment will release or discharge the assignor from any duty or responsibility under the Contract Documents.

9.03 *Successors and Assigns*

A. Owner and Contractor each binds itself, its successors, assigns, and legal representatives to the other party hereto, its successors, assigns, and legal representatives in respect to all covenants, agreements, and obligations contained in the Contract Documents.

9.04 *Severability*

A. Any provision or part of the Contract Documents held to be void or unenforceable under any Law or Regulation shall be deemed stricken, and all remaining provisions shall continue to be valid and binding upon Owner and Contractor, who agree that the Contract Documents shall be reformed to replace such stricken provision or part thereof with a valid and

This document is a MODIFIED version of EJCDC® C-520, Copyright © 2013 by the National Society of Professional Engineers, American Council of Engineering Companies, and American Society of Civil Engineers. Those portions of the text that originated in published EJCDC documents remain subject to the copyright.

enforceable provision that comes as close as possible to expressing the intention of the stricken provision.

9.05 *Contractor's Certifications*

A. Contractor certifies that it has not engaged in corrupt, fraudulent, collusive, or coercive practices in competing for or in executing the Contract. For the purposes of this Paragraph 10.05:

1. "corrupt practice" means the offering, giving, receiving, or soliciting of anything of value likely to influence the action of a public official in the bidding process or in the Contract execution;

2. "fraudulent practice" means an intentional misrepresentation of facts made (a) to influence the bidding process or the execution of the Contract to the detriment of Owner, (b) to establish Bid or Contract prices at artificial non-competitive levels, or (c) to deprive Owner of the benefits of free and open competition;

3. "collusive practice" means a scheme or arrangement between two or more Bidders, with or without the knowledge of Owner, a purpose of which is to establish Bid prices at artificial, non-competitive levels; and

4. "coercive practice" means harming or threatening to harm, directly or indirectly, persons or their property to influence their participation in the bidding process or affect the execution of the Contract.

9.06 *Other Provisions*

A. Owner stipulates that if the General Conditions that are made a part of this Contract are based on EJCDC® C-700, Standard General Conditions for the Construction Contract, published by the Engineers Joint Contract Documents Committee®, and if Owner is the party that has furnished said General Conditions, then Owner has plainly shown all modifications to the standard wording of such published document to the Contractor, through a process such as highlighting or "track changes" (redline/strikeout), or in the Supplementary Conditions.

9.07 *Contractor's Warranty*

A. Contractor warrantee's its Work and the Work of its Subcontractors for a period of no less than one year from the day of being granted Substantial Completion. Additional warranties may be included in this Agreement as special guarantees as required by the Contract Documents.

9.08 *Prevailing Wages*

A. The Awarded Bidder shall provide a Statement of Prevailing Wages on Public Works Contract, and an Affidavit of Wages Paid. Refer to the Supplementary Conditions for more information.

This document is a MODIFIED version of EJCDC® C-520, Copyright © 2013 by the National Society of Professional Engineers, American Council of Engineering Companies, and American Society of Civil Engineers. Those portions of the text that originated in published EJCDC documents remain subject to the copyright.

IN WITNESS WHEREOF, Owner and Contractor have signed this Agreement.

This Agreement will be effective on _____, 20_____ (which is the Effective Date of the Contract).

OWNER:	CONTRACTOR:
Whitman County, Washington	_____
By: _____	By: _____
Title: Chairman, Board of Commissioners	Title: _____
	(If Contractor is a corporation, a partnership, or a joint venture, attach evidence of authority to sign.)
Attest: _____	Attest: _____
Title: _____	Title: _____
	Address for giving notices:
	_____
	_____
	_____
	Contractor's License No.: _____

END OF SECTION

This document is a MODIFIED version of EJCDC® C-520, Copyright © 2013 by the National Society of Professional Engineers, American Council of Engineering Companies, and American Society of Civil Engineers. Those portions of the text that originated in published EJCDC documents remain subject to the copyright.

STANDARD FORMS

EJCDC
ENGINEERS JOINT CONTRACT DOCUMENTS COMMITTEE

NOTICE OF AWARD

Date of Issuance: _____

Owner: Whitman County Board of County Commissioners

Owner's Bid No.: XEW31

Engineer: Great West Engineering, Inc.

Engineer's Project No.: 4-16108

Project: Carothers Road Solid Waste Facility, Contact Water and Fire Suppression Water Tanks Project

Bidder:

Bidder's Address:

TO BIDDER:

You are notified that Owner has accepted your Bid dated _____ for the above Contract, and that you are the Successful Bidder and are awarded a Contract for:

The Contact Water and Fire Suppression Water Tanks Project.

The Contract Price of the awarded Contract is: $_____

[ ] unexecuted counterparts of the Agreement accompany this Notice of Award, and one copy of the Contract Documents accompanies this Notice of Award, or has been transmitted or made available to Bidder electronically. *[revise if multiple copies accompany the Notice of Award]*

☒ One set of Full-Size Drawings will be delivered separately from the other Contract Documents.

You must comply with the following conditions precedent within 15 calendar days of the date of this Notice of Award:

1. Deliver to Owner [____] counterparts of the Agreement, fully executed by Bidder.
2. Deliver with the executed Agreement(s) the Contract security *[e.g., performance and payment bonds]* and insurance documentation as specified in the Instructions to Bidders and General Conditions, Articles 2 and 6.
3. Other conditions precedent (if any):

Failure to comply with these conditions within the time specified will entitle Owner to consider you in default, annul this Notice of Award, and declare your Bid security forfeited.

Within 10 calendar days after you comply with the above conditions, Owner will return to you one fully executed counterpart of the Agreement, together with any additional copies of the Contract Documents as indicated in Paragraph 2.02 of the General Conditions.

Owner**:** Whitman County Board of County Commissioners

By: _____

Title: _____

_____
Authorized Signature

Copy: Engineer

ACCEPTANCE OF AWARD

By: _____
(Contractor)

This, _____ day of _____, 20_____

By: _____
(Signature)

By: _____
(Type Name of Signatory)

Title: _____

END OF SECTION

EJCDC
ENGINEERS JOINT CONTRACT DOCUMENTS COMMITTEE

NOTICE TO PROCEED

Owner:	Whitman County Board of County Commissioners	Owner's Bid No.:	XEW31
Contractor:		Engineer's Project No.:	4-16108
Engineer:	Great West Engineering, Inc.		
Project:	Carothers Road Solid Waste Facility, Contact Water and Fire Suppression Water Tanks Project		
		Effective Date of Contract: _____	

TO CONTRACTOR:

Owner hereby notifies Contractor that the Contract Times under the above Contract will commence to run on _____, 20____. *[see Paragraph 4.01 of the General Conditions]*, but no later than by August 14, 2017.

On that date, Contractor shall start performing its obligations under the Contract Documents. No Work shall be done at the Site prior to such date. In accordance with the Agreement, [the date of Substantial Completion is _____, and the date of readiness for final payment is_____] ***or*** [the number of days to achieve Substantial Completion **is <u>90 calendar days</u>** <u>from this date</u>, and the number of days to achieve readiness for final payment is **30 calendar days** from when Substantial Completion is granted.

Before starting any Work at the Site, Contractor must comply with the following:
[Note any access limitations, security procedures, or other restrictions]

Owner**:** Whitman County Board of County Commissioners

By: _____

Title: _____

_____
Authorized Signature

Copy: Engineer

ACCEPTANCE OF NOTICE TO PROCEED

Receipt of the above Notice to Proceed is hereby acknowledged by:_____

Contractor_____

By: _____

Title: _____

Date: _____

END OF SECTION

EJCDC
ENGINEERS JOINT CONTRACT DOCUMENTS COMMITTEE

PERFORMANCE BOND

CONTRACTOR *(name and address)*:

SURETY *(name and address of principal place of business)*:

OWNER *(name and address)*:

CONSTRUCTION CONTRACT
Effective Date of the Agreement:
Amount:
Description *(name and location)*:

BOND
Bond Number:
Date *(not earlier than the Effective Date of the Agreement of the Construction Contract)*:
Amount:
Modifications to this Bond Form: ☐ None ☐ See Paragraph 16

Surety and Contractor, intending to be legally bound hereby, subject to the terms set forth below, do each cause this Performance Bond to be duly executed by an authorized officer, agent, or representative.

CONTRACTOR AS PRINCIPAL

_____ *(seal)*
Contractor's Name and Corporate Seal

By: _____
Signature

_____
Print Name

_____
Title

Attest:_____
Signature

_____
Title

SURETY

_____ *(seal)*
Surety's Name and Corporate Seal

By:_____
Signature *(attach power of attorney)*

_____
Print Name

_____
Title

Attest:_____
Signature

_____
Title

Notes: (1) Provide supplemental execution by any additional parties, such as joint venturers. (2) Any singular reference to Contractor, Surety, Owner, or other party shall be considered plural where applicable.

Copyright © 2013 National Society of Professional Engineers, American Council of Engineering Companies, and American Society of Civil Engineers. All rights reserved.

1. The Contractor and Surety, jointly and severally, bind themselves, their heirs, executors, administrators, successors, and assigns to the Owner for the performance of the Construction Contract, which is incorporated herein by reference.

2. If the Contractor performs the Construction Contract, the Surety and the Contractor shall have no obligation under this Bond, except when applicable to participate in a conference as provided in Paragraph 3.

3. If there is no Owner Default under the Construction Contract, the Surety's obligation under this Bond shall arise after:

3.1 The Owner first provides notice to the Contractor and the Surety that the Owner is considering declaring a Contractor Default. Such notice shall indicate whether the Owner is requesting a conference among the Owner, Contractor, and Surety to discuss the Contractor's performance. If the Owner does not request a conference, the Surety may, within five (5) business days after receipt of the Owner's notice, request such a conference. If the Surety timely requests a conference, the Owner shall attend. Unless the Owner agrees otherwise, any conference requested under this Paragraph 3.1 shall be held within ten (10) business days of the Surety's receipt of the Owner's notice. If the Owner, the Contractor, and the Surety agree, the Contractor shall be allowed a reasonable time to perform the Construction Contract, but such an agreement shall not waive the Owner's right, if any, subsequently to declare a Contractor Default;

3.2 The Owner declares a Contractor Default, terminates the Construction Contract and notifies the Surety; and

3.3 The Owner has agreed to pay the Balance of the Contract Price in accordance with the terms of the Construction Contract to the Surety or to a contractor selected to perform the Construction Contract.

4. Failure on the part of the Owner to comply with the notice requirement in Paragraph 3.1 shall not constitute a failure to comply with a condition precedent to the Surety's obligations, or release the Surety from its obligations, except to the extent the Surety demonstrates actual prejudice.

5. When the Owner has satisfied the conditions of Paragraph 3, the Surety shall promptly and at the Surety's expense take one of the following actions:

5.1 Arrange for the Contractor, with the consent of the Owner, to perform and complete the Construction Contract;

5.2 Undertake to perform and complete the Construction Contract itself, through its agents or independent contractors;

5.3 Obtain bids or negotiated proposals from qualified contractors acceptable to the Owner for a contract for performance and completion of the Construction Contract, arrange for a contract to be prepared for execution by the Owner and a contractor selected with the Owners concurrence, to be secured with performance and payment bonds executed by a qualified surety equivalent to the bonds issued on the Construction Contract, and pay to the Owner the amount of damages as described in Paragraph 7 in excess of the Balance of the Contract Price incurred by the Owner as a result of the Contractor Default; or

5.4 Waive its right to perform and complete, arrange for completion, or obtain a new contractor, and with reasonable promptness under the circumstances:

5.4.1 After investigation, determine the amount for which it may be liable to the Owner and, as soon as practicable after the amount is determined, make payment to the Owner; or

5.4.2 Deny liability in whole or in part and notify the Owner, citing the reasons for denial.

6. If the Surety does not proceed as provided in Paragraph 5 with reasonable promptness, the Surety shall be deemed to be in default on this Bond seven days after receipt of an additional written notice from the Owner to the Surety demanding that the Surety perform its obligations under this Bond, and the Owner shall be entitled to enforce any remedy available to the Owner. If the Surety proceeds as provided in Paragraph 5.4, and the Owner refuses the payment or the Surety has denied liability, in whole or in part, without further notice the Owner shall be entitled to enforce any remedy available to the Owner.

7. If the Surety elects to act under Paragraph 5.1, 5.2, or 5.3, then the responsibilities of the Surety to the Owner shall not be greater than those of the Contractor under the Construction Contract, and the responsibilities of the Owner to the Surety shall not be greater than those of the Owner under the Construction Contract. Subject to the commitment by the Owner to pay the Balance of the Contract Price, the Surety is obligated, without duplication for:

7.1 the responsibilities of the Contractor for correction of defective work and completion of the Construction Contract;

7.2 additional legal, design professional, and delay costs resulting from the Contractor's Default, and resulting from the actions or failure to act of the Surety under Paragraph 5; and

7.3 liquidated damages, or if no liquidated damages are specified in the Construction Contract, actual damages caused by delayed performance or non-performance of the Contractor.

8. If the Surety elects to act under Paragraph 5.1, 5.3, or 5.4, the Surety's liability is limited to the amount of this Bond.

9. The Surety shall not be liable to the Owner or others for obligations of the Contractor that are unrelated to the Construction Contract, and the Balance of the Contract Price shall not be reduced or set off on account of any such unrelated obligations. No right of action shall accrue on this Bond to any person or entity other than the Owner or its heirs, executors, administrators, successors, and assigns.

10. The Surety hereby waives notice of any change, including changes of time, to the Construction Contract or to related subcontracts, purchase orders, and other obligations.

11. Any proceeding, legal or equitable, under this Bond may be instituted in any court of competent jurisdiction in the location in which the work or part of the work is located and shall be instituted within two years after a declaration of Contractor Default or within

Copyright © 2013 National Society of Professional Engineers, American Council of Engineering Companies, and American Society of Civil Engineers. All rights reserved.

two years after the Contractor ceased working or within two years after the Surety refuses or fails to perform its obligations under this Bond, whichever occurs first. If the provisions of this paragraph are void or prohibited by law, the minimum periods of limitations available to sureties as a defense in the jurisdiction of the suit shall be applicable.

12. Notice to the Surety, the Owner, or the Contractor shall be mailed or delivered to the address shown on the page on which their signature appears.

13. When this Bond has been furnished to comply with a statutory or other legal requirement in the location where the construction was to be performed, any provision in this Bond conflicting with said statutory or legal requirement shall be deemed deleted herefrom and provisions conforming to such statutory or other legal requirement shall be deemed incorporated herein. When so furnished, the intent is that this Bond shall be construed as a statutory bond and not as a common law bond.

14. Definitions

14.1 Balance of the Contract Price: The total amount payable by the Owner to the Contractor under the Construction Contract after all proper adjustments have been made including allowance for the Contractor for any amounts received or to be received by the Owner in settlement of insurance or other claims for damages to which the Contractor is entitled, reduced by all valid and proper payments made to or on behalf of the Contractor under the Construction Contract.

14.2 Construction Contract: The agreement between the Owner and Contractor identified on the cover page, including all Contract Documents and changes made to the agreement and the Contract Documents.

14.3 Contractor Default: Failure of the Contractor, which has not been remedied or waived, to perform or otherwise to comply with a material term of the Construction Contract.

14.4 Owner Default: Failure of the Owner, which has not been remedied or waived, to pay the Contractor as required under the Construction Contract or to perform and complete or comply with the other material terms of the Construction Contract.

14.5 Contract Documents: All the documents that comprise the agreement between the Owner and Contractor.

15. If this Bond is issued for an agreement between a contractor and subcontractor, the term Contractor in this Bond shall be deemed to be Subcontractor and the term Owner shall be deemed to be Contractor.

16. Modifications to this Bond are as follows:

Copyright © 2013 National Society of Professional Engineers, American Council of Engineering Companies, and American Society of Civil Engineers. All rights reserved.

EJCDC
ENGINEERS JOINT CONTRACT DOCUMENTS COMMITTEE

PAYMENT BOND

CONTRACTOR *(name and address)*:

SURETY *(name and address of principal place of business)*:

OWNER *(name and address)*:

CONSTRUCTION CONTRACT
Effective Date of the Agreement:
Amount:
Description *(name and location)*:

BOND
Bond Number:
Date *(not earlier than the Effective Date of the Agreement of the Construction Contract)*:
Amount:
Modifications to this Bond Form: ☐ None ☐ See Paragraph 18

Surety and Contractor, intending to be legally bound hereby, subject to the terms set forth below, do each cause this Payment Bond to be duly executed by an authorized officer, agent, or representative.

CONTRACTOR AS PRINCIPAL

_____ *(seal)*
Contractor's Name and Corporate Seal

By: _____
Signature

_____
Print Name

_____
Title

Attest: _____
Signature

_____
Title

SURETY

_____ *(seal)*
Surety's Name and Corporate Seal

By: _____
Signature *(attach power of attorney)*

_____
Print Name

_____
Title

Attest: _____
Signature

_____
Title

Notes: (1) Provide supplemental execution by any additional parties, such as joint venturers. (2) Any singular reference to Contractor, Surety, Owner, or other party shall be considered plural where applicable.

Copyright © 2013 National Society of Professional Engineers, American Council of Engineering Companies, and American Society of Civil Engineers. All rights reserved.

1. The Contractor and Surety, jointly and severally, bind themselves, their heirs, executors, administrators, successors, and assigns to the Owner to pay for labor, materials, and equipment furnished for use in the performance of the Construction Contract, which is incorporated herein by reference, subject to the following terms.

2. If the Contractor promptly makes payment of all sums due to Claimants, and defends, indemnifies, and holds harmless the Owner from claims, demands, liens, or suits by any person or entity seeking payment for labor, materials, or equipment furnished for use in the performance of the Construction Contract, then the Surety and the Contractor shall have no obligation under this Bond.

3. If there is no Owner Default under the Construction Contract, the Surety's obligation to the Owner under this Bond shall arise after the Owner has promptly notified the Contractor and the Surety (at the address described in Paragraph 13) of claims, demands, liens, or suits against the Owner or the Owner's property by any person or entity seeking payment for labor, materials, or equipment furnished for use in the performance of the Construction Contract, and tendered defense of such claims, demands, liens, or suits to the Contractor and the Surety.

4. When the Owner has satisfied the conditions in Paragraph 3, the Surety shall promptly and at the Surety's expense defend, indemnify, and hold harmless the Owner against a duly tendered claim, demand, lien, or suit.

5. The Surety's obligations to a Claimant under this Bond shall arise after the following:

   5.1 Claimants who do not have a direct contract with the Contractor,

      5.1.1 have furnished a written notice of non-payment to the Contractor, stating with substantial accuracy the amount claimed and the name of the party to whom the materials were, or equipment was, furnished or supplied or for whom the labor was done or performed, within ninety (90) days after having last performed labor or last furnished materials or equipment included in the Claim; and

      5.1.2 have sent a Claim to the Surety (at the address described in Paragraph 13).

   5.2 Claimants who are employed by or have a direct contract with the Contractor have sent a Claim to the Surety (at the address described in Paragraph 13).

6. If a notice of non-payment required by Paragraph 5.1.1 is given by the Owner to the Contractor, that is sufficient to satisfy a Claimant's obligation to furnish a written notice of non-payment under Paragraph 5.1.1.

7. When a Claimant has satisfied the conditions of Paragraph 5.1 or 5.2, whichever is applicable, the Surety shall promptly and at the Surety's expense take the following actions:

   7.1 Send an answer to the Claimant, with a copy to the Owner, within sixty (60) days after receipt of the Claim, stating the amounts that are undisputed and the basis for challenging any amounts that are disputed; and

   7.2 Pay or arrange for payment of any undisputed amounts.

   7.3 The Surety's failure to discharge its obligations under Paragraph 7.1 or 7.2 shall not be deemed to constitute a waiver of defenses the Surety or Contractor may have or acquire as to a Claim, except as to undisputed amounts for which the Surety and Claimant have reached agreement. If, however, the Surety fails to discharge its obligations under Paragraph 7.1 or 7.2, the Surety shall indemnify the Claimant for the reasonable attorney's fees the Claimant incurs thereafter to recover any sums found to be due and owing to the Claimant.

8. The Surety's total obligation shall not exceed the amount of this Bond, plus the amount of reasonable attorney's fees provided under Paragraph 7.3, and the amount of this Bond shall be credited for any payments made in good faith by the Surety.

9. Amounts owed by the Owner to the Contractor under the Construction Contract shall be used for the performance of the Construction Contract and to satisfy claims, if any, under any construction performance bond. By the Contractor furnishing and the Owner accepting this Bond, they agree that all funds earned by the Contractor in the performance of the Construction Contract are dedicated to satisfy obligations of the Contractor and Surety under this Bond, subject to the Owner's priority to use the funds for the completion of the work.

10. The Surety shall not be liable to the Owner, Claimants, or others for obligations of the Contractor that are unrelated to the Construction Contract. The Owner shall not be liable for the payment of any costs or expenses of any Claimant under this Bond, and shall have under this Bond no obligation to make payments to or give notice on behalf of Claimants, or otherwise have any obligations to Claimants under this Bond.

11. The Surety hereby waives notice of any change, including changes of time, to the Construction Contract or to related subcontracts, purchase orders, and other obligations.

12. No suit or action shall be commenced by a Claimant under this Bond other than in a court of competent jurisdiction in the state in which the project that is the subject of the Construction Contract is located or after the expiration of one year from the date (1) on which the Claimant sent a Claim to the Surety pursuant to Paragraph 5.1.2 or 5.2, or (2) on which the last labor or service was performed by anyone or the last materials or equipment were furnished by anyone under the Construction Contract, whichever of (1) or (2) first occurs. If the provisions of this paragraph

Copyright © 2013 National Society of Professional Engineers, American Council of Engineering Companies, and American Society of Civil Engineers. All rights reserved.

are void or prohibited by law, the minimum period of limitation available to sureties as a defense in the jurisdiction of the suit shall be applicable.

13. Notice and Claims to the Surety, the Owner, or the Contractor shall be mailed or delivered to the address shown on the page on which their signature appears. Actual receipt of notice or Claims, however accomplished, shall be sufficient compliance as of the date received.

14. When this Bond has been furnished to comply with a statutory or other legal requirement in the location where the construction was to be performed, any provision in this Bond conflicting with said statutory or legal requirement shall be deemed deleted herefrom and provisions conforming to such statutory or other legal requirement shall be deemed incorporated herein. When so furnished, the intent is that this Bond shall be construed as a statutory bond and not as a common law bond.

15. Upon requests by any person or entity appearing to be a potential beneficiary of this Bond, the Contractor and Owner shall promptly furnish a copy of this Bond or shall permit a copy to be made.

16. **Definitions**

16.1 **Claim:** A written statement by the Claimant including at a minimum:

1. The name of the Claimant;
2. The name of the person for whom the labor was done, or materials or equipment furnished;
3. A copy of the agreement or purchase order pursuant to which labor, materials, or equipment was furnished for use in the performance of the Construction Contract;
4. A brief description of the labor, materials, or equipment furnished;
5. The date on which the Claimant last performed labor or last furnished materials or equipment for use in the performance of the Construction Contract;
6. The total amount earned by the Claimant for labor, materials, or equipment furnished as of the date of the Claim;
7. The total amount of previous payments received by the Claimant; and
8. The total amount due and unpaid to the Claimant for labor, materials, or equipment furnished as of the date of the Claim.

16.2 **Claimant:** An individual or entity having a direct contract with the Contractor or with a subcontractor of the Contractor to furnish labor, materials, or equipment for use in the performance of the Construction Contract. The term Claimant also includes any individual or entity that has rightfully asserted a claim under an applicable mechanic's lien or similar statute against the real property upon which the Project is located. The intent of this Bond shall be to include without limitation in the terms of "labor, materials, or equipment" that part of the water, gas, power, light, heat, oil, gasoline, telephone service, or rental equipment used in the Construction Contract, architectural and engineering services required for performance of the work of the Contractor and the Contractor's subcontractors, and all other items for which a mechanic's lien may be asserted in the jurisdiction where the labor, materials, or equipment were furnished.

16.3 **Construction Contract:** The agreement between the Owner and Contractor identified on the cover page, including all Contract Documents and all changes made to the agreement and the Contract Documents.

16.4 **Owner Default**: Failure of the Owner, which has not been remedied or waived, to pay the Contractor as required under the Construction Contract or to perform and complete or comply with the other material terms of the Construction Contract.

16.5 **Contract Documents:** All the documents that comprise the agreement between the Owner and Contractor.

17. If this Bond is issued for an agreement between a contractor and subcontractor, the term Contractor in this Bond shall be deemed to be Subcontractor and the term Owner shall be deemed to be Contractor.

18. Modifications to this Bond are as follows:

Copyright © 2013 National Society of Professional Engineers, American Council of Engineering Companies, and American Society of Civil Engineers. All rights reserved.

EJCDC
ENGINEERS JOINT CONTRACT DOCUMENTS COMMITTEE

CERTIFICATE OF SUBSTANTIAL COMPLETION

Owner:	Owner's Contract No.:
Contractor:	Contractor's Project No.:
Engineer:	Engineer's Project No.:
Project:	Contract Name:

This [preliminary] [final] Certificate of Substantial Completion applies to:

☐ All Work ☐ The following specified portions of the Work:

_____

Date of Substantial Completion

The Work to which this Certificate applies has been inspected by authorized representatives of Owner, Contractor, and Engineer, and found to be substantially complete. The Date of Substantial Completion of the Work or portion thereof designated above is hereby established, subject to the provisions of the Contract pertaining to Substantial Completion. The date of Substantial Completion in the final Certificate of Substantial Completion marks the commencement of the contractual correction period and applicable warranties required by the Contract.

A punch list of items to be completed or corrected is attached to this Certificate. This list may not be all-inclusive, and the failure to include any items on such list does not alter the responsibility of the Contractor to complete all Work in accordance with the Contract.

The responsibilities between Owner and Contractor for security, operation, safety, maintenance, heat, utilities, insurance, and warranties upon Owner's use or occupancy of the Work shall be as provided in the Contract, except as amended as follows: *[Note: Amendments of contractual responsibilities recorded in this Certificate should be the product of mutual agreement of Owner and Contractor; see Paragraph 15.03.D of the General Conditions.]*

Amendments to Owner's responsibilities: ☐ None
☐ As follows

Amendments to Contractor's responsibilities: ☐ None
☐ As follows:

The following documents are attached to and made a part of this Certificate: *[punch list; others]*

This Certificate does not constitute an acceptance of Work not in accordance with the Contract Documents, nor is it a release of Contractor's obligation to complete the Work in accordance with the Contract.

EXECUTED BY ENGINEER:	RECEIVED:	RECEIVED:
By: _____	By: _____	By: _____
(Authorized signature)	Owner (Authorized Signature)	Contractor (Authorized Signature)
Title: _____	Title: _____	Title: _____
Date: _____	Date: _____	Date: _____

LIEN RELEASE FORM

TO:

STATE OF _____}
}ss.
COUNTY OF _____}

The Undersigned, being first duly sworn, deposes and says: That he is the party to that certain contract dated _____, 20_____, covering the construction of:

That he has performed the work thereunder and completed the same, that all just debts due all laborers, mechanics, material men, and all persons who supplied him with materials or goods of any kind for this work, and that all premiums earned on Workman's Compensation Insurance for labor performed on the above-stated work, have been duly and fully paid or reimbursed.

_____
Contractor

By: _____
Authorized Representative

Subscribed and sworn to before me this _____ day of _____, 20_____

My commission expires: _____

_____
Notary Public, Residing at

_____
My Commission Expires

APPROVED BY:

_____
Surety

END OF SECTION

REQUEST TO SUBLET WORK

Sub _____

Agent _____

Prime Contractor	Federal Empl. ID No.	St. Cont. No

Address	Federal-Aid Project No.

City	State	Zip	Sign Route	Request No.

Approval is Required to Sublet the Following Described Work to:

Subcontractor or Agent	Federal Employer ID No.*
Address	Telephone No.
City State Zip	Estimated Starting Date

Work to be Sublet

Item No.	Partial	Item Description	Amount

I understand and will ensure that the subcontractor will comply fully with the Plans and Specifications under which this work is being performed.

Prime Contractor Signature Date

Approved County Engineer Date

END OF SECTION

GENERAL CONDITIONS

This document has important legal consequences; consultation with an attorney is encouraged with respect to its use or modification. This document should be adapted to the particular circumstances of the contemplated Project and the controlling Laws and Regulations.

STANDARD GENERAL CONDITIONS OF THE CONSTRUCTION CONTRACT

Prepared by

EJCDC®
ENGINEERS JOINT CONTRACT DOCUMENTS COMMITTEE

Issued and Published Jointly by

ACEC
AMERICAN COUNCIL OF ENGINEERING COMPANIES

ASCE
AMERICAN SOCIETY OF CIVIL ENGINEERS

National Society of Professional Engineers®

EJCDC® C-700, Standard General Conditions of the Construction Contract.
Copyright © 2013 National Society of Professional Engineers, American Council of Engineering Companies, and American Society of Civil Engineers. All rights reserved.

These General Conditions have been prepared for use with the Agreement Between Owner and Contractor for Construction Contract (EJCDC® C-520, Stipulated Sum, or C-525, Cost-Plus, 2013 Editions). Their provisions are interrelated and a change in one may necessitate a change in the other.

To prepare supplementary conditions that are coordinated with the General Conditions, use EJCDC's Guide to the Preparation of Supplementary Conditions (EJCDC® C-800, 2013 Edition). The full EJCDC Construction series of documents is discussed in the Commentary on the 2013 EJCDC Construction Documents (EJCDC® C-001, 2013 Edition).

Copyright © 2013:

National Society of Professional Engineers

1420 King Street, Alexandria, VA 22314-2794

(703) 684-2882

www.nspe.org

American Council of Engineering Companies

1015 15th Street N.W., Washington, DC 20005

(202) 347-7474

www.acec.org

American Society of Civil Engineers

1801 Alexander Bell Drive, Reston, VA 20191-4400

(800) 548-2723

www.asce.org

The copyright for this document is owned jointly by the three sponsoring organizations listed above. The National Society of Professional Engineers is the Copyright Administrator for the EJCDC documents; please direct all inquiries regarding EJCDC copyrights to NSPE.

NOTE: EJCDC publications may be purchased at www.ejcdc.org, or from any of the sponsoring organizations above.

Copyright © 2013 National Society of Professional Engineers, American Council of Engineering Companies, and American Society of Civil Engineers. All rights reserved.

STANDARD GENERAL CONDITIONS OF THE CONSTRUCTION CONTRACT

TABLE OF CONTENTS

Page

Article 1 – Definitions and Terminology 1

1.01 Defined Terms 1

1.02 Terminology 5

Article 2 – Preliminary Matters 6

2.01 Delivery of Bonds and Evidence of Insurance 6

2.02 Copies of Documents 6

2.03 Before Starting Construction 6

2.04 Preconstruction Conference; Designation of Authorized Representatives 7

2.05 Initial Acceptance of Schedules 7

2.06 Electronic Transmittals 7

Article 3 – Documents: Intent, Requirements, Reuse 8

3.01 Intent 8

3.02 Reference Standards 8

3.03 Reporting and Resolving Discrepancies 8

3.04 Requirements of the Contract Documents 9

3.05 Reuse of Documents 10

Article 4 – Commencement and Progress of the Work 10

4.01 Commencement of Contract Times; Notice to Proceed 10

4.02 Starting the Work 10

4.03 Reference Points 10

4.04 Progress Schedule 10

4.05 Delays in Contractor's Progress 11

Article 5 – Availability of Lands; Subsurface and Physical Conditions; Hazardous Environmental Conditions 12

5.01 Availability of Lands 12

5.02 Use of Site and Other Areas 12

5.03 Subsurface and Physical Conditions 13

5.04 Differing Subsurface or Physical Conditions 14

5.05 Underground Facilities 15

Copyright © 2013 National Society of Professional Engineers, American Council of Engineering Companies, and American Society of Civil Engineers. All rights reserved.

5.06 Hazardous Environmental Conditions at Site 17
Article 6 – Bonds and Insurance 19
6.01 Performance, Payment, and Other Bonds 19
6.02 Insurance—General Provisions 19
6.03 Contractor's Insurance 20
6.04 Owner's Liability Insurance 23
6.05 Property Insurance 23
6.06 Waiver of Rights 25
6.07 Receipt and Application of Property Insurance Proceeds 25
Article 7 – Contractor's Responsibilities 26
7.01 Supervision and Superintendence 26
7.02 Labor; Working Hours 26
7.03 Services, Materials, and Equipment 26
7.04 "Or Equals" 27
7.05 Substitutes 28
7.06 Concerning Subcontractors, Suppliers, and Others 29
7.07 Patent Fees and Royalties 31
7.08 Permits 31
7.09 Taxes 32
7.10 Laws and Regulations 32
7.11 Record Documents 32
7.12 Safety and Protection 32
7.13 Safety Representative 33
7.14 Hazard Communication Programs 33
7.15 Emergencies 34
7.16 Shop Drawings, Samples, and Other Submittals 34
7.17 Contractor's General Warranty and Guarantee 36
7.18 Indemnification 37
7.19 Delegation of Professional Design Services 37
Article 8 – Other Work at the Site 38
8.01 Other Work 38
8.02 Coordination 39
8.03 Legal Relationships 39

Copyright © 2013 National Society of Professional Engineers, American Council of Engineering Companies, and American Society of Civil Engineers. All rights reserved.

Article 9 – Owner's Responsibilities 40
9.01 Communications to Contractor 40
9.02 Replacement of Engineer 40
9.03 Furnish Data 40
9.04 Pay When Due 40
9.05 Lands and Easements; Reports, Tests, and Drawings 40
9.06 Insurance 40
9.07 Change Orders 40
9.08 Inspections, Tests, and Approvals 41
9.09 Limitations on Owner's Responsibilities 41
9.10 Undisclosed Hazardous Environmental Condition 41
9.11 Evidence of Financial Arrangements 41
9.12 Safety Programs 41
Article 10 – Engineer's Status During Construction 41
10.01 Owner's Representative 41
10.02 Visits to Site 41
10.03 Project Representative 42
10.04 Rejecting Defective Work 42
10.05 Shop Drawings, Change Orders and Payments 42
10.06 Determinations for Unit Price Work 42
10.07 Decisions on Requirements of Contract Documents and Acceptability of Work 42
10.08 Limitations on Engineer's Authority and Responsibilities 42
10.09 Compliance with Safety Program 43
Article 11 – Amending the Contract Documents; Changes in the Work 43
11.01 Amending and Supplementing Contract Documents 43
11.02 Owner-Authorized Changes in the Work 44
11.03 Unauthorized Changes in the Work 44
11.04 Change of Contract Price 44
11.05 Change of Contract Times 45
11.06 Change Proposals 45
11.07 Execution of Change Orders 46
11.08 Notification to Surety 47
Article 12 – Claims 47

Copyright © 2013 National Society of Professional Engineers, American Council of Engineering Companies, and American Society of Civil Engineers. All rights reserved.

12.01 Claims 47
Article 13 – Cost of the Work; Allowances; Unit Price Work 48
13.01 Cost of the Work 48
13.02 Allowances 50
13.03 Unit Price Work 51
Article 14 – Tests and Inspections; Correction, Removal or Acceptance of Defective Work 52
14.01 Access to Work 52
14.02 Tests, Inspections, and Approvals 52
14.03 Defective Work 53
14.04 Acceptance of Defective Work 53
14.05 Uncovering Work 53
14.06 Owner May Stop the Work 54
14.07 Owner May Correct Defective Work 54
Article 15 – Payments to Contractor; Set-Offs; Completion; Correction Period 55
15.01 Progress Payments 55
15.02 Contractor's Warranty of Title 58
15.03 Substantial Completion 58
15.04 Partial Use or Occupancy 59
15.05 Final Inspection 59
15.06 Final Payment 59
15.07 Waiver of Claims 61
15.08 Correction Period 61
Article 16 – Suspension of Work and Termination 62
16.01 Owner May Suspend Work 62
16.02 Owner May Terminate for Cause 62
16.03 Owner May Terminate For Convenience 63
16.04 Contractor May Stop Work or Terminate 63
Article 17 – Final Resolution of Disputes 64
17.01 Methods and Procedures 64
Article 18 – Miscellaneous 64
18.01 Giving Notice 64
18.02 Computation of Times 64
18.03 Cumulative Remedies 64

Copyright © 2013 National Society of Professional Engineers, American Council of Engineering Companies, and American Society of Civil Engineers. All rights reserved.

18.04 Limitation of Damages 65
18.05 No Waiver 65
18.06 Survival of Obligations 65
18.07 Controlling Law 65
18.08 Headings 65

Copyright © 2013 National Society of Professional Engineers, American Council of Engineering Companies, and American Society of Civil Engineers. All rights reserved.

ARTICLE 1 – DEFINITIONS AND TERMINOLOGY

1.01 *Defined Terms*

A. Wherever used in the Bidding Requirements or Contract Documents, a term printed with initial capital letters, including the term's singular and plural forms, will have the meaning indicated in the definitions below. In addition to terms specifically defined, terms with initial capital letters in the Contract Documents include references to identified articles and paragraphs, and the titles of other documents or forms.

1. *Addenda*—Written or graphic instruments issued prior to the opening of Bids which clarify, correct, or change the Bidding Requirements or the proposed Contract Documents.

2. *Agreement*—The written instrument, executed by Owner and Contractor, that sets forth the Contract Price and Contract Times, identifies the parties and the Engineer, and designates the specific items that are Contract Documents.

3. *Application for Payment*—The form acceptable to Engineer which is to be used by Contractor during the course of the Work in requesting progress or final payments and which is to be accompanied by such supporting documentation as is required by the Contract Documents.

4. *Bid*—The offer of a Bidder submitted on the prescribed form setting forth the prices for the Work to be performed.

5. *Bidder*—An individual or entity that submits a Bid to Owner.

6. *Bidding Documents*—The Bidding Requirements, the proposed Contract Documents, and all Addenda.

7. *Bidding Requirements*—The advertisement or invitation to bid, Instructions to Bidders, Bid Bond or other Bid security, if any, the Bid Form, and the Bid with any attachments.

8. *Change Order*—A document which is signed by Contractor and Owner and authorizes an addition, deletion, or revision in the Work or an adjustment in the Contract Price or the Contract Times, or other revision to the Contract, issued on or after the Effective Date of the Contract.

9. *Change Proposal*—A written request by Contractor, duly submitted in compliance with the procedural requirements set forth herein, seeking an adjustment in Contract Price or Contract Times, or both; contesting an initial decision by Engineer concerning the requirements of the Contract Documents or the acceptability of Work under the Contract Documents; challenging a set-off against payments due; or seeking other relief with respect to the terms of the Contract.

10. *Claim*—(a) A demand or assertion by Owner directly to Contractor, duly submitted in compliance with the procedural requirements set forth herein: seeking an adjustment of Contract Price or Contract Times, or both; contesting an initial decision by Engineer concerning the requirements of the Contract Documents or the acceptability of Work under the Contract Documents; contesting Engineer's decision regarding a Change Proposal; seeking resolution of a contractual issue that Engineer has declined to address; or seeking other relief with respect to the terms of the Contract; or (b) a demand or assertion by Contractor directly to Owner, duly submitted in compliance with the procedural requirements set forth herein, contesting Engineer's decision regarding a Change Proposal; or seeking resolution of a contractual issue that Engineer

Copyright © 2013 National Society of Professional Engineers, American Council of Engineering Companies, and American Society of Civil Engineers. All rights reserved.

has declined to address. A demand for money or services by a third party is not a Claim.

11. *Constituent of Concern*—Asbestos, petroleum, radioactive materials, polychlorinated biphenyls (PCBs), hazardous waste, and any substance, product, waste, or other material of any nature whatsoever that is or becomes listed, regulated, or addressed pursuant to (a) the Comprehensive Environmental Response, Compensation and Liability Act, 42 U.S.C. §§9601 et seq. ("CERCLA"); (b) the Hazardous Materials Transportation Act, 49 U.S.C. §§5101 et seq.; (c) the Resource Conservation and Recovery Act, 42 U.S.C. §§6901 et seq. ("RCRA"); (d) the Toxic Substances Control Act, 15 U.S.C. §§2601 et seq.; (e) the Clean Water Act, 33 U.S.C. §§1251 et seq.; (f) the Clean Air Act, 42 U.S.C. §§7401 et seq.; or (g) any other federal, state, or local statute, law, rule, regulation, ordinance, resolution, code, order, or decree regulating, relating to, or imposing liability or standards of conduct concerning, any hazardous, toxic, or dangerous waste, substance, or material.

12. *Contract*—The entire and integrated written contract between the Owner and Contractor concerning the Work.

13. *Contract Documents*—Those items so designated in the Agreement, and which together comprise the Contract.

14. *Contract Price*—The money that Owner has agreed to pay Contractor for completion of the Work in accordance with the Contract Documents. .

15. *Contract Times*—The number of days or the dates by which Contractor shall: (a) achieve Milestones, if any; (b) achieve Substantial Completion; and (c) complete the Work.

16. *Contractor*—The individual or entity with which Owner has contracted for performance of the Work.

17. *Cost of the Work*—See Paragraph 13.01 for definition.

18. *Drawings*—The part of the Contract that graphically shows the scope, extent, and character of the Work to be performed by Contractor.

19. *Effective Date of the Contract*—The date, indicated in the Agreement, on which the Contract becomes effective.

20. *Engineer*—The individual or entity named as such in the Agreement.

21. *Field Order*—A written order issued by Engineer which requires minor changes in the Work but does not change the Contract Price or the Contract Times.

22. *Hazardous Environmental Condition*—The presence at the Site of Constituents of Concern in such quantities or circumstances that may present a danger to persons or property exposed thereto. The presence at the Site of materials that are necessary for the execution of the Work, or that are to be incorporated in the Work, and that are controlled and contained pursuant to industry practices, Laws and Regulations, and the requirements of the Contract, does not establish a Hazardous Environmental Condition.

23. *Laws and Regulations; Laws or Regulations*—Any and all applicable laws, statutes, rules, regulations, ordinances, codes, and orders of any and all governmental bodies, agencies, authorities, and courts having jurisdiction.

Copyright © 2013 National Society of Professional Engineers, American Council of Engineering Companies, and American Society of Civil Engineers. All rights reserved.

24. *Liens*—Charges, security interests, or encumbrances upon Contract-related funds, real property, or personal property.

25. *Milestone*—A principal event in the performance of the Work that the Contract requires Contractor to achieve by an intermediate completion date or by a time prior to Substantial Completion of all the Work.

26. *Notice of Award*—The written notice by Owner to a Bidder of Owner's acceptance of the Bid.

27. *Notice to Proceed*—A written notice by Owner to Contractor fixing the date on which the Contract Times will commence to run and on which Contractor shall start to perform the Work.

28. *Owner*—The individual or entity with which Contractor has contracted regarding the Work, and which has agreed to pay Contractor for the performance of the Work, pursuant to the terms of the Contract.

29. *Progress Schedule*—A schedule, prepared and maintained by Contractor, describing the sequence and duration of the activities comprising the Contractor's plan to accomplish the Work within the Contract Times.

30. *Project*—The total undertaking to be accomplished for Owner by engineers, contractors, and others, including planning, study, design, construction, testing, commissioning, and start-up, and of which the Work to be performed under the Contract Documents is a part.

31. *Project Manual*—The written documents prepared for, or made available for, procuring and constructing the Work, including but not limited to the Bidding Documents or other construction procurement documents, geotechnical and existing conditions information, the Agreement, bond forms, General Conditions, Supplementary Conditions, and Specifications. The contents of the Project Manual may be bound in one or more volumes.

32. *Resident Project Representative*—The authorized representative of Engineer assigned to assist Engineer at the Site. As used herein, the term Resident Project Representative or "RPR" includes any assistants or field staff of Resident Project Representative.

33. *Samples*—Physical examples of materials, equipment, or workmanship that are representative of some portion of the Work and that establish the standards by which such portion of the Work will be judged.

34. *Schedule of Submittals*—A schedule, prepared and maintained by Contractor, of required submittals and the time requirements for Engineer's review of the submittals and the performance of related construction activities.

35. *Schedule of Values*—A schedule, prepared and maintained by Contractor, allocating portions of the Contract Price to various portions of the Work and used as the basis for reviewing Contractor's Applications for Payment.

36. *Shop Drawings*—All drawings, diagrams, illustrations, schedules, and other data or information that are specifically prepared or assembled by or for Contractor and submitted by Contractor to illustrate some portion of the Work. Shop Drawings, whether approved or not, are not Drawings and are not Contract Documents.

Copyright © 2013 National Society of Professional Engineers, American Council of Engineering Companies, and American Society of Civil Engineers. All rights reserved.

37. *Site*—Lands or areas indicated in the Contract Documents as being furnished by Owner upon which the Work is to be performed, including rights-of-way and easements, and such other lands furnished by Owner which are designated for the use of Contractor.

38. *Specifications*—The part of the Contract that consists of written requirements for materials, equipment, systems, standards, and workmanship as applied to the Work, and certain administrative requirements and procedural matters applicable to the Work.

39. *Subcontractor*—An individual or entity having a direct contract with Contractor or with any other Subcontractor for the performance of a part of the Work.

40. *Substantial Completion*—The time at which the Work (or a specified part thereof) has progressed to the point where, in the opinion of Engineer, the Work (or a specified part thereof) is sufficiently complete, in accordance with the Contract Documents, so that the Work (or a specified part thereof) can be utilized for the purposes for which it is intended. The terms "substantially complete" and "substantially completed" as applied to all or part of the Work refer to Substantial Completion thereof.

41. *Successful Bidder*—The Bidder whose Bid the Owner accepts, and to which the Owner makes an award of contract, subject to stated conditions.

42. *Supplementary Conditions*—The part of the Contract that amends or supplements these General Conditions.

43. *Supplier*—A manufacturer, fabricator, supplier, distributor, materialman, or vendor having a direct contract with Contractor or with any Subcontractor to furnish materials or equipment to be incorporated in the Work by Contractor or a Subcontractor.

44. *Technical Data*—Those items expressly identified as Technical Data in the Supplementary Conditions, with respect to either (a) subsurface conditions at the Site, or physical conditions relating to existing surface or subsurface structures at the Site (except Underground Facilities) or (b) Hazardous Environmental Conditions at the Site. If no such express identifications of Technical Data have been made with respect to conditions at the Site, then the data contained in boring logs, recorded measurements of subsurface water levels, laboratory test results, and other factual, objective information regarding conditions at the Site that are set forth in any geotechnical or environmental report prepared for the Project and made available to Contractor are hereby defined as Technical Data with respect to conditions at the Site under Paragraphs 5.03, 5.04, and 5.06.

45. *Underground Facilities*—All underground pipelines, conduits, ducts, cables, wires, manholes, vaults, tanks, tunnels, or other such facilities or attachments, and any encasements containing such facilities, including but not limited to those that convey electricity, gases, steam, liquid petroleum products, telephone or other communications, fiber optic transmissions, cable television, water, wastewater, storm water, other liquids or chemicals, or traffic or other control systems.

46. *Unit Price Work*—Work to be paid for on the basis of unit prices.

47. *Work*—The entire construction or the various separately identifiable parts thereof required to be provided under the Contract Documents. Work includes and is the result of performing or providing all labor, services, and documentation necessary to produce such construction; furnishing, installing, and incorporating all materials and equipment into such construction; and may include related services such as testing, start-up, and commissioning, all as required by the Contract Documents.

Copyright © 2013 National Society of Professional Engineers, American Council of Engineering Companies, and American Society of Civil Engineers. All rights reserved.

48. *Work Change Directive*—A written directive to Contractor issued on or after the Effective Date of the Contract, signed by Owner and recommended by Engineer, ordering an addition, deletion, or revision in the Work.

1.02 *Terminology*

A. The words and terms discussed in the following paragraphs are not defined but, when used in the Bidding Requirements or Contract Documents, have the indicated meaning.

B. *Intent of Certain Terms or Adjectives*:

1. The Contract Documents include the terms "as allowed," "as approved," "as ordered," "as directed" or terms of like effect or import to authorize an exercise of professional judgment by Engineer. In addition, the adjectives "reasonable," "suitable," "acceptable," "proper," "satisfactory," or adjectives of like effect or import are used to describe an action or determination of Engineer as to the Work. It is intended that such exercise of professional judgment, action, or determination will be solely to evaluate, in general, the Work for compliance with the information in the Contract Documents and with the design concept of the Project as a functioning whole as shown or indicated in the Contract Documents (unless there is a specific statement indicating otherwise). The use of any such term or adjective is not intended to and shall not be effective to assign to Engineer any duty or authority to supervise or direct the performance of the Work, or any duty or authority to undertake responsibility contrary to the provisions of Article 10 or any other provision of the Contract Documents.

C. *Day*:

1. The word "day" means a calendar day of 24 hours measured from midnight to the next midnight.

D. *Defective*:

1. The word "defective," when modifying the word "Work," refers to Work that is unsatisfactory, faulty, or deficient in that it:

a. does not conform to the Contract Documents; or

b. does not meet the requirements of any applicable inspection, reference standard, test, or approval referred to in the Contract Documents; or

c. has been damaged prior to Engineer's recommendation of final payment (unless responsibility for the protection thereof has been assumed by Owner at Substantial Completion in accordance with Paragraph 15.03 or 15.04).

E. *Furnish, Install, Perform, Provide*:

1. The word "furnish," when used in connection with services, materials, or equipment, shall mean to supply and deliver said services, materials, or equipment to the Site (or some other specified location) ready for use or installation and in usable or operable condition.

2. The word "install," when used in connection with services, materials, or equipment, shall mean to put into use or place in final position said services, materials, or equipment complete and ready for intended use.

Copyright © 2013 National Society of Professional Engineers, American Council of Engineering Companies, and American Society of Civil Engineers. All rights reserved.

3. The words “perform” or “provide,” when used in connection with services, materials, or equipment, shall mean to furnish and install said services, materials, or equipment complete and ready for intended use.

4. If the Contract Documents establish an obligation of Contractor with respect to specific services, materials, or equipment, but do not expressly use any of the four words “furnish,” “install,” “perform,” or “provide,” then Contractor shall furnish and install said services, materials, or equipment complete and ready for intended use.

F. Unless stated otherwise in the Contract Documents, words or phrases that have a well-known technical or construction industry or trade meaning are used in the Contract Documents in accordance with such recognized meaning.

ARTICLE 2 – PRELIMINARY MATTERS

2.01 *Delivery of Bonds and Evidence of Insurance*

A. *Bonds*: When Contractor delivers the executed counterparts of the Agreement to Owner, Contractor shall also deliver to Owner such bonds as Contractor may be required to furnish.

B. *Evidence of Contractor’s Insurance*: When Contractor delivers the executed counterparts of the Agreement to Owner, Contractor shall also deliver to Owner, with copies to each named insured and additional insured (as identified in the Supplementary Conditions or elsewhere in the Contract), the certificates and other evidence of insurance required to be provided by Contractor in accordance with Article 6.

C. *Evidence of Owner’s Insurance*: After receipt of the executed counterparts of the Agreement and all required bonds and insurance documentation, Owner shall promptly deliver to Contractor, with copies to each named insured and additional insured (as identified in the Supplementary Conditions or otherwise), the certificates and other evidence of insurance required to be provided by Owner under Article 6.

2.02 *Copies of Documents*

A. Owner shall furnish to Contractor four printed copies of the Contract (including one fully executed counterpart of the Agreement), and one copy in electronic portable document format (PDF). Additional printed copies will be furnished upon request at the cost of reproduction.

B. Owner shall maintain and safeguard at least one original printed record version of the Contract, including Drawings and Specifications signed and sealed by Engineer and other design professionals. Owner shall make such original printed record version of the Contract available to Contractor for review. Owner may delegate the responsibilities under this provision to Engineer.

2.03 *Before Starting Construction*

A. *Preliminary Schedules*: Within 10 days after the Effective Date of the Contract (or as otherwise specifically required by the Contract Documents), Contractor shall submit to Engineer for timely review:

1. a preliminary Progress Schedule indicating the times (numbers of days or dates) for starting and completing the various stages of the Work, including any Milestones specified in the Contract;

2. a preliminary Schedule of Submittals; and

Copyright © 2013 National Society of Professional Engineers, American Council of Engineering Companies, and American Society of Civil Engineers. All rights reserved.

3. a preliminary Schedule of Values for all of the Work which includes quantities and prices of items which when added together equal the Contract Price and subdivides the Work into component parts in sufficient detail to serve as the basis for progress payments during performance of the Work. Such prices will include an appropriate amount of overhead and profit applicable to each item of Work.

2.04 *Preconstruction Conference; Designation of Authorized Representatives*

A. Before any Work at the Site is started, a conference attended by Owner, Contractor, Engineer, and others as appropriate will be held to establish a working understanding among the parties as to the Work and to discuss the schedules referred to in Paragraph 2.03.A, procedures for handling Shop Drawings, Samples, and other submittals, processing Applications for Payment, electronic or digital transmittals, and maintaining required records.

B. At this conference Owner and Contractor each shall designate, in writing, a specific individual to act as its authorized representative with respect to the services and responsibilities under the Contract. Such individuals shall have the authority to transmit and receive information, render decisions relative to the Contract, and otherwise act on behalf of each respective party.

2.05 *Initial Acceptance of Schedules*

A. At least 10 days before submission of the first Application for Payment a conference, attended by Contractor, Engineer, and others as appropriate, will be held to review for acceptability to Engineer as provided below the schedules submitted in accordance with Paragraph 2.03.A. Contractor shall have an additional 10 days to make corrections and adjustments and to complete and resubmit the schedules. No progress payment shall be made to Contractor until acceptable schedules are submitted to Engineer.

1. The Progress Schedule will be acceptable to Engineer if it provides an orderly progression of the Work to completion within the Contract Times. Such acceptance will not impose on Engineer responsibility for the Progress Schedule, for sequencing, scheduling, or progress of the Work, nor interfere with or relieve Contractor from Contractor's full responsibility therefor.

2. Contractor's Schedule of Submittals will be acceptable to Engineer if it provides a workable arrangement for reviewing and processing the required submittals.

3. Contractor's Schedule of Values will be acceptable to Engineer as to form and substance if it provides a reasonable allocation of the Contract Price to the component parts of the Work.

2.06 *Electronic Transmittals*

A. Except as otherwise stated elsewhere in the Contract, the Owner, Engineer, and Contractor may transmit, and shall accept, Project-related correspondence, text, data, documents, drawings, information, and graphics, including but not limited to Shop Drawings and other submittals, in electronic media or digital format, either directly, or through access to a secure Project website.

B. If the Contract does not establish protocols for electronic or digital transmittals, then Owner, Engineer, and Contractor shall jointly develop such protocols.

C. When transmitting items in electronic media or digital format, the transmitting party makes no representations as to long term compatibility, usability, or readability of the items resulting from the recipient's use of software application packages, operating systems, or

Copyright © 2013 National Society of Professional Engineers, American Council of Engineering Companies, and American Society of Civil Engineers. All rights reserved.

computer hardware differing from those used in the drafting or transmittal of the items, or from those established in applicable transmittal protocols.

ARTICLE 3 – DOCUMENTS: INTENT, REQUIREMENTS, REUSE

3.01 *Intent*

A. The Contract Documents are complementary; what is required by one is as binding as if required by all.

B. It is the intent of the Contract Documents to describe a functionally complete project (or part thereof) to be constructed in accordance with the Contract Documents.

C. Unless otherwise stated in the Contract Documents, if there is a discrepancy between the electronic or digital versions of the Contract Documents (including any printed copies derived from such electronic or digital versions) and the printed record version, the printed record version shall govern.

D. The Contract supersedes prior negotiations, representations, and agreements, whether written or oral.

E. Engineer will issue clarifications and interpretations of the Contract Documents as provided herein.

3.02 *Reference Standards*

A. Standards Specifications, Codes, Laws and Regulations

1. Reference in the Contract Documents to standard specifications, manuals, reference standards, or codes of any technical society, organization, or association, or to Laws or Regulations, whether such reference be specific or by implication, shall mean the standard specification, manual, reference standard, code, or Laws or Regulations in effect at the time of opening of Bids (or on the Effective Date of the Contract if there were no Bids), except as may be otherwise specifically stated in the Contract Documents.

2. No provision of any such standard specification, manual, reference standard, or code, or any instruction of a Supplier, shall be effective to change the duties or responsibilities of Owner, Contractor, or Engineer, or any of their subcontractors, consultants, agents, or employees, from those set forth in the part of the Contract Documents prepared by or for Engineer. No such provision or instruction shall be effective to assign to Owner, Engineer, or any of their officers, directors, members, partners, employees, agents, consultants, or subcontractors, any duty or authority to supervise or direct the performance of the Work or any duty or authority to undertake responsibility inconsistent with the provisions of the part of the Contract Documents prepared by or for Engineer.

3.03 *Reporting and Resolving Discrepancies*

A. *Reporting Discrepancies*:

1. *Contractor's Verification of Figures and Field Measurements*: Before undertaking each part of the Work, Contractor shall carefully study the Contract Documents, and check and verify pertinent figures and dimensions therein, particularly with respect to applicable field measurements. Contractor shall promptly report in writing to Engineer any conflict, error, ambiguity, or discrepancy that Contractor discovers, or has actual knowledge of, and shall not proceed with any Work affected thereby until the conflict,

Copyright © 2013 National Society of Professional Engineers, American Council of Engineering Companies, and American Society of Civil Engineers. All rights reserved.

error, ambiguity, or discrepancy is resolved, by a clarification or interpretation by Engineer, or by an amendment or supplement to the Contract Documents issued pursuant to Paragraph 11.01.

2. *Contractor's Review of Contract Documents*: If, before or during the performance of the Work, Contractor discovers any conflict, error, ambiguity, or discrepancy within the Contract Documents, or between the Contract Documents and (a) any applicable Law or Regulation, (b) actual field conditions, (c) any standard specification, manual, reference standard, or code, or (d) any instruction of any Supplier, then Contractor shall promptly report it to Engineer in writing. Contractor shall not proceed with the Work affected thereby (except in an emergency as required by Paragraph 7.15) until the conflict, error, ambiguity, or discrepancy is resolved, by a clarification or interpretation by Engineer, or by an amendment or supplement to the Contract Documents issued pursuant to Paragraph 11.01.

3. Contractor shall not be liable to Owner or Engineer for failure to report any conflict, error, ambiguity, or discrepancy in the Contract Documents unless Contractor had actual knowledge thereof.

B. *Resolving Discrepancies*:

1. Except as may be otherwise specifically stated in the Contract Documents, the provisions of the part of the Contract Documents prepared by or for Engineer shall take precedence in resolving any conflict, error, ambiguity, or discrepancy between such provisions of the Contract Documents and:

   a. the provisions of any standard specification, manual, reference standard, or code, or the instruction of any Supplier (whether or not specifically incorporated by reference as a Contract Document); or

   b. the provisions of any Laws or Regulations applicable to the performance of the Work (unless such an interpretation of the provisions of the Contract Documents would result in violation of such Law or Regulation).

3.04 *Requirements of the Contract Documents*

A. During the performance of the Work and until final payment, Contractor and Owner shall submit to the Engineer all matters in question concerning the requirements of the Contract Documents (sometimes referred to as requests for information or interpretation—RFIs), or relating to the acceptability of the Work under the Contract Documents, as soon as possible after such matters arise. Engineer will be the initial interpreter of the requirements of the Contract Documents, and judge of the acceptability of the Work thereunder.

B. Engineer will, with reasonable promptness, render a written clarification, interpretation, or decision on the issue submitted, or initiate an amendment or supplement to the Contract Documents. Engineer's written clarification, interpretation, or decision will be final and binding on Contractor, unless it appeals by submitting a Change Proposal, and on Owner, unless it appeals by filing a Claim.

C. If a submitted matter in question concerns terms and conditions of the Contract Documents that do not involve (1) the performance or acceptability of the Work under the Contract Documents, (2) the design (as set forth in the Drawings, Specifications, or otherwise), or (3) other engineering or technical matters, then Engineer will promptly give written notice to Owner and Contractor that Engineer is unable to provide a decision or interpretation. If Owner and Contractor are unable to agree on resolution of such a matter in question, either party may pursue resolution as provided in Article 12.

Copyright © 2013 National Society of Professional Engineers, American Council of Engineering Companies, and American Society of Civil Engineers. All rights reserved.

3.05 *Reuse of Documents*

A. Contractor and its Subcontractors and Suppliers shall not:

1. have or acquire any title to or ownership rights in any of the Drawings, Specifications, or other documents (or copies of any thereof) prepared by or bearing the seal of Engineer or its consultants, including electronic media editions, or reuse any such Drawings, Specifications, other documents, or copies thereof on extensions of the Project or any other project without written consent of Owner and Engineer and specific written verification or adaptation by Engineer; or

2. have or acquire any title or ownership rights in any other Contract Documents, reuse any such Contract Documents for any purpose without Owner's express written consent, or violate any copyrights pertaining to such Contract Documents.

B. The prohibitions of this Paragraph 3.05 will survive final payment, or termination of the Contract. Nothing herein shall preclude Contractor from retaining copies of the Contract Documents for record purposes.

ARTICLE 4 – COMMENCEMENT AND PROGRESS OF THE WORK

4.01 *Commencement of Contract Times; Notice to Proceed*

A. The Contract Times will commence to run on the thirtieth day after the Effective Date of the Contract or, if a Notice to Proceed is given, on the day indicated in the Notice to Proceed. A Notice to Proceed may be given at any time within 30 days after the Effective Date of the Contract. In no event will the Contract Times commence to run later than the sixtieth day after the day of Bid opening or the thirtieth day after the Effective Date of the Contract, whichever date is earlier.

4.02 *Starting the Work*

A. Contractor shall start to perform the Work on the date when the Contract Times commence to run. No Work shall be done at the Site prior to such date.

4.03 *Reference Points*

A. Owner shall provide engineering surveys to establish reference points for construction which in Engineer's judgment are necessary to enable Contractor to proceed with the Work. Contractor shall be responsible for laying out the Work, shall protect and preserve the established reference points and property monuments, and shall make no changes or relocations without the prior written approval of Owner. Contractor shall report to Engineer whenever any reference point or property monument is lost or destroyed or requires relocation because of necessary changes in grades or locations, and shall be responsible for the accurate replacement or relocation of such reference points or property monuments by professionally qualified personnel.

4.04 *Progress Schedule*

A. Contractor shall adhere to the Progress Schedule established in accordance with Paragraph 2.05 as it may be adjusted from time to time as provided below.

1. Contractor shall submit to Engineer for acceptance (to the extent indicated in Paragraph 2.05) proposed adjustments in the Progress Schedule that will not result in changing the Contract Times.

Copyright © 2013 National Society of Professional Engineers, American Council of Engineering Companies, and American Society of Civil Engineers. All rights reserved.

2. Proposed adjustments in the Progress Schedule that will change the Contract Times shall be submitted in accordance with the requirements of Article 11.

B. Contractor shall carry on the Work and adhere to the Progress Schedule during all disputes or disagreements with Owner. No Work shall be delayed or postponed pending resolution of any disputes or disagreements, or during any appeal process, except as permitted by Paragraph 16.04, or as Owner and Contractor may otherwise agree in writing.

4.05 *Delays in Contractor's Progress*

A. If Owner, Engineer, or anyone for whom Owner is responsible, delays, disrupts, or interferes with the performance or progress of the Work, then Contractor shall be entitled to an equitable adjustment in the Contract Times and Contract Price. Contractor's entitlement to an adjustment of the Contract Times is conditioned on such adjustment being essential to Contractor's ability to complete the Work within the Contract Times.

B. Contractor shall not be entitled to an adjustment in Contract Price or Contract Times for delay, disruption, or interference caused by or within the control of Contractor. Delay, disruption, and interference attributable to and within the control of a Subcontractor or Supplier shall be deemed to be within the control of Contractor.

C. If Contractor's performance or progress is delayed, disrupted, or interfered with by unanticipated causes not the fault of and beyond the control of Owner, Contractor, and those for which they are responsible, then Contractor shall be entitled to an equitable adjustment in Contract Times. Contractor's entitlement to an adjustment of the Contract Times is conditioned on such adjustment being essential to Contractor's ability to complete the Work within the Contract Times. Such an adjustment shall be Contractor's sole and exclusive remedy for the delays, disruption, and interference described in this paragraph. Causes of delay, disruption, or interference that may give rise to an adjustment in Contract Times under this paragraph include but are not limited to the following:

1. severe and unavoidable natural catastrophes such as fires, floods, epidemics, and earthquakes;

2. abnormal weather conditions;

3. acts or failures to act of utility owners (other than those performing other work at or adjacent to the Site by arrangement with the Owner, as contemplated in Article 8); and

4. acts of war or terrorism.

D. Delays, disruption, and interference to the performance or progress of the Work resulting from the existence of a differing subsurface or physical condition, an Underground Facility that was not shown or indicated by the Contract Documents, or not shown or indicated with reasonable accuracy, and those resulting from Hazardous Environmental Conditions, are governed by Article 5.

E. Paragraph 8.03 governs delays, disruption, and interference to the performance or progress of the Work resulting from the performance of certain other work at or adjacent to the Site.

F. Contractor shall not be entitled to an adjustment in Contract Price or Contract Times for any delay, disruption, or interference if such delay is concurrent with a delay, disruption, or interference caused by or within the control of Contractor.

Copyright © 2013 National Society of Professional Engineers, American Council of Engineering Companies, and American Society of Civil Engineers. All rights reserved.

G. Contractor must submit any Change Proposal seeking an adjustment in Contract Price or Contract Times under this paragraph within 30 days of the commencement of the delaying, disrupting, or interfering event.

ARTICLE 5 – AVAILABILITY OF LANDS; SUBSURFACE AND PHYSICAL CONDITIONS; HAZARDOUS ENVIRONMENTAL CONDITIONS

5.01 *Availability of Lands*

A. Owner shall furnish the Site. Owner shall notify Contractor of any encumbrances or restrictions not of general application but specifically related to use of the Site with which Contractor must comply in performing the Work.

B. Upon reasonable written request, Owner shall furnish Contractor with a current statement of record legal title and legal description of the lands upon which permanent improvements are to be made and Owner's interest therein as necessary for giving notice of or filing a mechanic's or construction lien against such lands in accordance with applicable Laws and Regulations.

C. Contractor shall provide for all additional lands and access thereto that may be required for temporary construction facilities or storage of materials and equipment.

5.02 *Use of Site and Other Areas*

A. *Limitation on Use of Site and Other Areas*:

1. Contractor shall confine construction equipment, temporary construction facilities, the storage of materials and equipment, and the operations of workers to the Site, adjacent areas that Contractor has arranged to use through construction easements or otherwise, and other adjacent areas permitted by Laws and Regulations, and shall not unreasonably encumber the Site and such other adjacent areas with construction equipment or other materials or equipment. Contractor shall assume full responsibility for (a) damage to the Site; (b) damage to any such other adjacent areas used for Contractor's operations; (c) damage to any other adjacent land or areas; and (d) for injuries and losses sustained by the owners or occupants of any such land or areas; provided that such damage or injuries result from the performance of the Work or from other actions or conduct of the Contractor or those for which Contractor is responsible.

2. If a damage or injury claim is made by the owner or occupant of any such land or area because of the performance of the Work, or because of other actions or conduct of the Contractor or those for which Contractor is responsible, Contractor shall (a) take immediate corrective or remedial action as required by Paragraph 7.12, or otherwise; (b) promptly attempt to settle the claim as to all parties through negotiations with such owner or occupant, or otherwise resolve the claim by arbitration or other dispute resolution proceeding, or at law; and (c) to the fullest extent permitted by Laws and Regulations, indemnify and hold harmless Owner and Engineer, and the officers, directors, members, partners, employees, agents, consultants and subcontractors of each and any of them from and against any such claim, and against all costs, losses, and damages (including but not limited to all fees and charges of engineers, architects, attorneys, and other professionals and all court or arbitration or other dispute resolution costs) arising out of or relating to any claim or action, legal or equitable, brought by any such owner or occupant against Owner, Engineer, or any other party indemnified hereunder to the extent caused directly or indirectly, in whole or in part

Copyright © 2013 National Society of Professional Engineers, American Council of Engineering Companies, and American Society of Civil Engineers. All rights reserved.

by, or based upon, Contractor's performance of the Work, or because of other actions or conduct of the Contractor or those for which Contractor is responsible.

B. *Removal of Debris During Performance of the Work*: During the progress of the Work the Contractor shall keep the Site and other adjacent areas free from accumulations of waste materials, rubbish, and other debris. Removal and disposal of such waste materials, rubbish, and other debris shall conform to applicable Laws and Regulations.

C. *Cleaning*: Prior to Substantial Completion of the Work Contractor shall clean the Site and the Work and make it ready for utilization by Owner. At the completion of the Work Contractor shall remove from the Site and adjacent areas all tools, appliances, construction equipment and machinery, and surplus materials and shall restore to original condition all property not designated for alteration by the Contract Documents.

D. *Loading of Structures*: Contractor shall not load nor permit any part of any structure to be loaded in any manner that will endanger the structure, nor shall Contractor subject any part of the Work or adjacent structures or land to stresses or pressures that will endanger them.

5.03 *Subsurface and Physical Conditions*

A. *Reports and Drawings*: The Supplementary Conditions identify:

1. those reports known to Owner of explorations and tests of subsurface conditions at or adjacent to the Site;

2. those drawings known to Owner of physical conditions relating to existing surface or subsurface structures at the Site (except Underground Facilities); and

3. Technical Data contained in such reports and drawings.

B. *Reliance by Contractor on Technical Data Authorized*: Contractor may rely upon the accuracy of the Technical Data expressly identified in the Supplementary Conditions with respect to such reports and drawings, but such reports and drawings are not Contract Documents. If no such express identification has been made, then Contractor may rely upon the accuracy of the Technical Data (as defined in Article 1) contained in any geotechnical or environmental report prepared for the Project and made available to Contractor. Except for such reliance on Technical Data, Contractor may not rely upon or make any claim against Owner or Engineer, or any of their officers, directors, members, partners, employees, agents, consultants, or subcontractors, with respect to:

1. the completeness of such reports and drawings for Contractor's purposes, including, but not limited to, any aspects of the means, methods, techniques, sequences, and procedures of construction to be employed by Contractor, and safety precautions and programs incident thereto; or

2. other data, interpretations, opinions, and information contained in such reports or shown or indicated in such drawings; or

3. any Contractor interpretation of or conclusion drawn from any Technical Data or any such other data, interpretations, opinions, or information.

Copyright © 2013 National Society of Professional Engineers, American Council of Engineering Companies, and American Society of Civil Engineers. All rights reserved.

5.04 *Differing Subsurface or Physical Conditions*

A. *Notice by Contractor*: If Contractor believes that any subsurface or physical condition that is uncovered or revealed at the Site either:

1. is of such a nature as to establish that any Technical Data on which Contractor is entitled to rely as provided in Paragraph 5.03 is materially inaccurate; or

2. is of such a nature as to require a change in the Drawings or Specifications; or

3. differs materially from that shown or indicated in the Contract Documents; or

4. is of an unusual nature, and differs materially from conditions ordinarily encountered and generally recognized as inherent in work of the character provided for in the Contract Documents;

then Contractor shall, promptly after becoming aware thereof and before further disturbing the subsurface or physical conditions or performing any Work in connection therewith (except in an emergency as required by Paragraph 7.15), notify Owner and Engineer in writing about such condition. Contractor shall not further disturb such condition or perform any Work in connection therewith (except with respect to an emergency) until receipt of a written statement permitting Contractor to do so.

B. *Engineer's Review*: After receipt of written notice as required by the preceding paragraph, Engineer will promptly review the subsurface or physical condition in question; determine the necessity of Owner's obtaining additional exploration or tests with respect to the condition; conclude whether the condition falls within any one or more of the differing site condition categories in Paragraph 5.04.A above; obtain any pertinent cost or schedule information from Contractor; prepare recommendations to Owner regarding the Contractor's resumption of Work in connection with the subsurface or physical condition in question and the need for any change in the Drawings or Specifications; and advise Owner in writing of Engineer's findings, conclusions, and recommendations.

C. *Owner's Statement to Contractor Regarding Site Condition*: After receipt of Engineer's written findings, conclusions, and recommendations, Owner shall issue a written statement to Contractor (with a copy to Engineer) regarding the subsurface or physical condition in question, addressing the resumption of Work in connection with such condition, indicating whether any change in the Drawings or Specifications will be made, and adopting or rejecting Engineer's written findings, conclusions, and recommendations, in whole or in part.

D. *Possible Price and Times Adjustments*:

1. Contractor shall be entitled to an equitable adjustment in Contract Price or Contract Times, or both, to the extent that the existence of a differing subsurface or physical condition, or any related delay, disruption, or interference, causes an increase or decrease in Contractor's cost of, or time required for, performance of the Work; subject, however, to the following:

a. such condition must fall within any one or more of the categories described in Paragraph 5.04.A;

b. with respect to Work that is paid for on a unit price basis, any adjustment in Contract Price will be subject to the provisions of Paragraph 13.03; and,

Copyright © 2013 National Society of Professional Engineers, American Council of Engineering Companies, and American Society of Civil Engineers. All rights reserved.

c. Contractor's entitlement to an adjustment of the Contract Times is conditioned on such adjustment being essential to Contractor's ability to complete the Work within the Contract Times.

2. Contractor shall not be entitled to any adjustment in the Contract Price or Contract Times with respect to a subsurface or physical condition if:

a. Contractor knew of the existence of such condition at the time Contractor made a commitment to Owner with respect to Contract Price and Contract Times by the submission of a Bid or becoming bound under a negotiated contract, or otherwise; or

b. the existence of such condition reasonably could have been discovered or revealed as a result of any examination, investigation, exploration, test, or study of the Site and contiguous areas expressly required by the Bidding Requirements or Contract Documents to be conducted by or for Contractor prior to Contractor's making such commitment; or

c. Contractor failed to give the written notice as required by Paragraph 5.04.A.

3. If Owner and Contractor agree regarding Contractor's entitlement to and the amount or extent of any adjustment in the Contract Price or Contract Times, or both, then any such adjustment shall be set forth in a Change Order.

4. Contractor may submit a Change Proposal regarding its entitlement to or the amount or extent of any adjustment in the Contract Price or Contract Times, or both, no later than 30 days after Owner's issuance of the Owner's written statement to Contractor regarding the subsurface or physical condition in question.

5.05 *Underground Facilities*

A. *Contractor's Responsibilities*: The information and data shown or indicated in the Contract Documents with respect to existing Underground Facilities at or adjacent to the Site is based on information and data furnished to Owner or Engineer by the owners of such Underground Facilities, including Owner, or by others. Unless it is otherwise expressly provided in the Supplementary Conditions:

1. Owner and Engineer do not warrant or guarantee the accuracy or completeness of any such information or data provided by others; and

2. the cost of all of the following will be included in the Contract Price, and Contractor shall have full responsibility for:

a. reviewing and checking all information and data regarding existing Underground Facilities at the Site;

b. locating all Underground Facilities shown or indicated in the Contract Documents as being at the Site;

c. coordination of the Work with the owners (including Owner) of such Underground Facilities, during construction; and

d. the safety and protection of all existing Underground Facilities at the Site, and repairing any damage thereto resulting from the Work.

B. *Notice by Contractor*: If Contractor believes that an Underground Facility that is uncovered or revealed at the Site was not shown or indicated in the Contract Documents, or was not shown or indicated with reasonable accuracy, then Contractor shall, promptly after

Copyright © 2013 National Society of Professional Engineers, American Council of Engineering Companies, and American Society of Civil Engineers. All rights reserved.

becoming aware thereof and before further disturbing conditions affected thereby or performing any Work in connection therewith (except in an emergency as required by Paragraph 7.15), identify the owner of such Underground Facility and give written notice to that owner and to Owner and Engineer.

C. *Engineer's Review*: Engineer will promptly review the Underground Facility and conclude whether such Underground Facility was not shown or indicated in the Contract Documents, or was not shown or indicated with reasonable accuracy; obtain any pertinent cost or schedule information from Contractor; prepare recommendations to Owner regarding the Contractor's resumption of Work in connection with the Underground Facility in question; determine the extent, if any, to which a change is required in the Drawings or Specifications to reflect and document the consequences of the existence or location of the Underground Facility; and advise Owner in writing of Engineer's findings, conclusions, and recommendations. During such time, Contractor shall be responsible for the safety and protection of such Underground Facility.

D. *Owner's Statement to Contractor Regarding Underground Facility*: After receipt of Engineer's written findings, conclusions, and recommendations, Owner shall issue a written statement to Contractor (with a copy to Engineer) regarding the Underground Facility in question, addressing the resumption of Work in connection with such Underground Facility, indicating whether any change in the Drawings or Specifications will be made, and adopting or rejecting Engineer's written findings, conclusions, and recommendations in whole or in part.

E. *Possible Price and Times Adjustments*:

1. Contractor shall be entitled to an equitable adjustment in the Contract Price or Contract Times, or both, to the extent that any existing Underground Facility at the Site that was not shown or indicated in the Contract Documents, or was not shown or indicated with reasonable accuracy, or any related delay, disruption, or interference, causes an increase or decrease in Contractor's cost of, or time required for, performance of the Work; subject, however, to the following:

    a. Contractor did not know of and could not reasonably have been expected to be aware of or to have anticipated the existence or actual location of the Underground Facility in question;

    b. With respect to Work that is paid for on a unit price basis, any adjustment in Contract Price will be subject to the provisions of Paragraph 13.03;

    c. Contractor's entitlement to an adjustment of the Contract Times is conditioned on such adjustment being essential to Contractor's ability to complete the Work within the Contract Times; and

    d. Contractor gave the notice required in Paragraph 5.05.B.

2. If Owner and Contractor agree regarding Contractor's entitlement to and the amount or extent of any adjustment in the Contract Price or Contract Times, or both, then any such adjustment shall be set forth in a Change Order.

3. Contractor may submit a Change Proposal regarding its entitlement to or the amount or extent of any adjustment in the Contract Price or Contract Times, or both, no later than 30 days after Owner's issuance of the Owner's written statement to Contractor regarding the Underground Facility in question.

Copyright © 2013 National Society of Professional Engineers, American Council of Engineering Companies, and American Society of Civil Engineers. All rights reserved.

5.06 *Hazardous Environmental Conditions at Site*

A. *Reports and Drawings*: The Supplementary Conditions identify:

1. those reports and drawings known to Owner relating to Hazardous Environmental Conditions that have been identified at or adjacent to the Site; and

2. Technical Data contained in such reports and drawings.

B. *Reliance by Contractor on Technical Data Authorized*: Contractor may rely upon the accuracy of the Technical Data expressly identified in the Supplementary Conditions with respect to such reports and drawings, but such reports and drawings are not Contract Documents. If no such express identification has been made, then Contractor may rely on the accuracy of the Technical Data (as defined in Article 1) contained in any geotechnical or environmental report prepared for the Project and made available to Contractor. Except for such reliance on Technical Data, Contractor may not rely upon or make any claim against Owner or Engineer, or any of their officers, directors, members, partners, employees, agents, consultants, or subcontractors with respect to:

1. the completeness of such reports and drawings for Contractor's purposes, including, but not limited to, any aspects of the means, methods, techniques, sequences and procedures of construction to be employed by Contractor and safety precautions and programs incident thereto; or

2. other data, interpretations, opinions and information contained in such reports or shown or indicated in such drawings; or

3. any Contractor interpretation of or conclusion drawn from any Technical Data or any such other data, interpretations, opinions or information.

C. Contractor shall not be responsible for removing or remediating any Hazardous Environmental Condition encountered, uncovered, or revealed at the Site unless such removal or remediation is expressly identified in the Contract Documents to be within the scope of the Work.

D. Contractor shall be responsible for controlling, containing, and duly removing all Constituents of Concern brought to the Site by Contractor, Subcontractors, Suppliers, or anyone else for whom Contractor is responsible, and for any associated costs; and for the costs of removing and remediating any Hazardous Environmental Condition created by the presence of any such Constituents of Concern.

E. If Contractor encounters, uncovers, or reveals a Hazardous Environmental Condition whose removal or remediation is not expressly identified in the Contract Documents as being within the scope of the Work, or if Contractor or anyone for whom Contractor is responsible creates a Hazardous Environmental Condition, then Contractor shall immediately: (1) secure or otherwise isolate such condition; (2) stop all Work in connection with such condition and in any area affected thereby (except in an emergency as required by Paragraph 7.15); and (3) notify Owner and Engineer (and promptly thereafter confirm such notice in writing). Owner shall promptly consult with Engineer concerning the necessity for Owner to retain a qualified expert to evaluate such condition or take corrective action, if any. Promptly after consulting with Engineer, Owner shall take such actions as are necessary to permit Owner to timely obtain required permits and provide Contractor the written notice required by Paragraph 5.06.F. If Contractor or anyone for whom Contractor is responsible created the Hazardous Environmental Condition in question, then Owner may remove and remediate the Hazardous Environmental Condition, and impose a set-off against payments to account for the associated costs.

Copyright © 2013 National Society of Professional Engineers, American Council of Engineering Companies, and American Society of Civil Engineers. All rights reserved.

F. Contractor shall not resume Work in connection with such Hazardous Environmental Condition or in any affected area until after Owner has obtained any required permits related thereto, and delivered written notice to Contractor either (1) specifying that such condition and any affected area is or has been rendered safe for the resumption of Work, or (2) specifying any special conditions under which such Work may be resumed safely.

G. If Owner and Contractor cannot agree as to entitlement to or on the amount or extent, if any, of any adjustment in Contract Price or Contract Times, or both, as a result of such Work stoppage or such special conditions under which Work is agreed to be resumed by Contractor, then within 30 days of Owner's written notice regarding the resumption of Work, Contractor may submit a Change Proposal, or Owner may impose a set-off.

H. If after receipt of such written notice Contractor does not agree to resume such Work based on a reasonable belief it is unsafe, or does not agree to resume such Work under such special conditions, then Owner may order the portion of the Work that is in the area affected by such condition to be deleted from the Work, following the contractual change procedures in Article 11. Owner may have such deleted portion of the Work performed by Owner's own forces or others in accordance with Article 8.

I. To the fullest extent permitted by Laws and Regulations, Owner shall indemnify and hold harmless Contractor, Subcontractors, and Engineer, and the officers, directors, members, partners, employees, agents, consultants, and subcontractors of each and any of them from and against all claims, costs, losses, and damages (including but not limited to all fees and charges of engineers, architects, attorneys, and other professionals and all court or arbitration or other dispute resolution costs) arising out of or relating to a Hazardous Environmental Condition, provided that such Hazardous Environmental Condition (1) was not shown or indicated in the Drawings, Specifications, or other Contract Documents, identified as Technical Data entitled to limited reliance pursuant to Paragraph 5.06.B, or identified in the Contract Documents to be included within the scope of the Work, and (2) was not created by Contractor or by anyone for whom Contractor is responsible. Nothing in this Paragraph 5.06.I shall obligate Owner to indemnify any individual or entity from and against the consequences of that individual's or entity's own negligence.

J. To the fullest extent permitted by Laws and Regulations, Contractor shall indemnify and hold harmless Owner and Engineer, and the officers, directors, members, partners, employees, agents, consultants, and subcontractors of each and any of them from and against all claims, costs, losses, and damages (including but not limited to all fees and charges of engineers, architects, attorneys, and other professionals and all court or arbitration or other dispute resolution costs) arising out of or relating to the failure to control, contain, or remove a Constituent of Concern brought to the Site by Contractor or by anyone for whom Contractor is responsible, or to a Hazardous Environmental Condition created by Contractor or by anyone for whom Contractor is responsible. Nothing in this Paragraph 5.06.J shall obligate Contractor to indemnify any individual or entity from and against the consequences of that individual's or entity's own negligence.

K. The provisions of Paragraphs 5.03, 5.04, and 5.05 do not apply to the presence of Constituents of Concern or to a Hazardous Environmental Condition uncovered or revealed at the Site.

Copyright © 2013 National Society of Professional Engineers, American Council of Engineering Companies, and American Society of Civil Engineers. All rights reserved.

ARTICLE 6 – BONDS AND INSURANCE

6.01 *Performance, Payment, and Other Bonds*

A. Contractor shall furnish a performance bond and a payment bond, each in an amount at least equal to the Contract Price, as security for the faithful performance and payment of all of Contractor's obligations under the Contract. These bonds shall remain in effect until one year after the date when final payment becomes due or until completion of the correction period specified in Paragraph 15.08, whichever is later, except as provided otherwise by Laws or Regulations, the Supplementary Conditions, or other specific provisions of the Contract. Contractor shall also furnish such other bonds as are required by the Supplementary Conditions or other specific provisions of the Contract.

B. All bonds shall be in the form prescribed by the Contract except as provided otherwise by Laws or Regulations, and shall be executed by such sureties as are named in "Companies Holding Certificates of Authority as Acceptable Sureties on Federal Bonds and as Acceptable Reinsuring Companies" as published in Circular 570 (as amended and supplemented) by the Financial Management Service, Surety Bond Branch, U.S. Department of the Treasury. A bond signed by an agent or attorney-in-fact must be accompanied by a certified copy of that individual's authority to bind the surety. The evidence of authority shall show that it is effective on the date the agent or attorney-in-fact signed the accompanying bond.

C. Contractor shall obtain the required bonds from surety companies that are duly licensed or authorized in the jurisdiction in which the Project is located to issue bonds in the required amounts.

D. If the surety on a bond furnished by Contractor is declared bankrupt or becomes insolvent, or its right to do business is terminated in any state or jurisdiction where any part of the Project is located, or the surety ceases to meet the requirements above, then Contractor shall promptly notify Owner and Engineer and shall, within 20 days after the event giving rise to such notification, provide another bond and surety, both of which shall comply with the bond and surety requirements above.

E. If Contractor has failed to obtain a required bond, Owner may exclude the Contractor from the Site and exercise Owner's termination rights under Article 16.

F. Upon request, Owner shall provide a copy of the payment bond to any Subcontractor, Supplier, or other person or entity claiming to have furnished labor or materials used in the performance of the Work.

6.02 *Insurance—General Provisions*

A. Owner and Contractor shall obtain and maintain insurance as required in this Article and in the Supplementary Conditions.

B. All insurance required by the Contract to be purchased and maintained by Owner or Contractor shall be obtained from insurance companies that are duly licensed or authorized, in the state or jurisdiction in which the Project is located, to issue insurance policies for the required limits and coverages. Unless a different standard is indicated in the Supplementary Conditions, all companies that provide insurance policies required under this Contract shall have an A.M. Best rating of A-VII or better.

C. Contractor shall deliver to Owner, with copies to each named insured and additional insured (as identified in this Article, in the Supplementary Conditions, or elsewhere in the Contract), certificates of insurance establishing that Contractor has obtained and is

Copyright © 2013 National Society of Professional Engineers, American Council of Engineering Companies, and American Society of Civil Engineers. All rights reserved.

maintaining the policies, coverages, and endorsements required by the Contract. Upon request by Owner or any other insured, Contractor shall also furnish other evidence of such required insurance, including but not limited to copies of policies and endorsements, and documentation of applicable self-insured retentions and deductibles. Contractor may block out (redact) any confidential premium or pricing information contained in any policy or endorsement furnished under this provision.

D. Owner shall deliver to Contractor, with copies to each named insured and additional insured (as identified in this Article, the Supplementary Conditions, or elsewhere in the Contract), certificates of insurance establishing that Owner has obtained and is maintaining the policies, coverages, and endorsements required of Owner by the Contract (if any). Upon request by Contractor or any other insured, Owner shall also provide other evidence of such required insurance (if any), including but not limited to copies of policies and endorsements, and documentation of applicable self-insured retentions and deductibles. Owner may block out (redact) any confidential premium or pricing information contained in any policy or endorsement furnished under this provision.

E. Failure of Owner or Contractor to demand such certificates or other evidence of the other party's full compliance with these insurance requirements, or failure of Owner or Contractor to identify a deficiency in compliance from the evidence provided, shall not be construed as a waiver of the other party's obligation to obtain and maintain such insurance.

F. If either party does not purchase or maintain all of the insurance required of such party by the Contract, such party shall notify the other party in writing of such failure to purchase prior to the start of the Work, or of such failure to maintain prior to any change in the required coverage.

G. If Contractor has failed to obtain and maintain required insurance, Owner may exclude the Contractor from the Site, impose an appropriate set-off against payment, and exercise Owner's termination rights under Article 16.

H. Without prejudice to any other right or remedy, if a party has failed to obtain required insurance, the other party may elect to obtain equivalent insurance to protect such other party's interests at the expense of the party who was required to provide such coverage, and the Contract Price shall be adjusted accordingly.

I. Owner does not represent that insurance coverage and limits established in this Contract necessarily will be adequate to protect Contractor or Contractor's interests.

J. The insurance and insurance limits required herein shall not be deemed as a limitation on Contractor's liability under the indemnities granted to Owner and other individuals and entities in the Contract.

6.03 *Contractor's Insurance*

A. *Workers' Compensation*: Contractor shall purchase and maintain workers' compensation and employer's liability insurance for:

1. claims under workers' compensation, disability benefits, and other similar employee benefit acts.

2. United States Longshoreman and Harbor Workers' Compensation Act and Jones Act coverage (if applicable).

3. claims for damages because of bodily injury, occupational sickness or disease, or death of Contractor's employees (by stop-gap endorsement in monopolist worker's compensation states).

Copyright © 2013 National Society of Professional Engineers, American Council of Engineering Companies, and American Society of Civil Engineers. All rights reserved.

4. Foreign voluntary worker compensation (if applicable).

B. *Commercial General Liability—Claims Covered*: Contractor shall purchase and maintain commercial general liability insurance, covering all operations by or on behalf of Contractor, on an occurrence basis, against:

1. claims for damages because of bodily injury, sickness or disease, or death of any person other than Contractor's employees.

2. claims for damages insured by reasonably available personal injury liability coverage.

3. claims for damages, other than to the Work itself, because of injury to or destruction of tangible property wherever located, including loss of use resulting therefrom.

C. *Commercial General Liability—Form and Content*: Contractor's commercial liability policy shall be written on a 1996 (or later) ISO commercial general liability form (occurrence form) and include the following coverages and endorsements:

1. Products and completed operations coverage:

   a. Such insurance shall be maintained for three years after final payment.

   b. Contractor shall furnish Owner and each other additional insured (as identified in the Supplementary Conditions or elsewhere in the Contract) evidence of continuation of such insurance at final payment and three years thereafter.

2. Blanket contractual liability coverage, to the extent permitted by law, including but not limited to coverage of Contractor's contractual indemnity obligations in Paragraph 7.18.

3. Broad form property damage coverage.

4. Severability of interest.

5. Underground, explosion, and collapse coverage.

6. Personal injury coverage.

7. Additional insured endorsements that include both ongoing operations and products and completed operations coverage through ISO Endorsements CG 20 10 10 01 and CG 20 37 10 01 (together); or CG 20 10 07 04 and CG 20 37 07 04 (together); or their equivalent.

8. For design professional additional insureds, ISO Endorsement CG 20 32 07 04, "Additional Insured—Engineers, Architects or Surveyors Not Engaged by the Named Insured" or its equivalent.

D. *Automobile liability*: Contractor shall purchase and maintain automobile liability insurance against claims for damages because of bodily injury or death of any person or property damage arising out of the ownership, maintenance, or use of any motor vehicle. The automobile liability policy shall be written on an occurrence basis.

E. *Umbrella or excess liability*: Contractor shall purchase and maintain umbrella or excess liability insurance written over the underlying employer's liability, commercial general liability, and automobile liability insurance described in the paragraphs above. Subject to industry-standard exclusions, the coverage afforded shall follow form as to each and every one of the underlying policies.

F. *Contractor's pollution liability insurance*: Contractor shall purchase and maintain a policy covering third-party injury and property damage claims, including clean-up costs, as a result

Copyright © 2013 National Society of Professional Engineers, American Council of Engineering Companies, and American Society of Civil Engineers. All rights reserved.

of pollution conditions arising from Contractor's operations and completed operations. This insurance shall be maintained for no less than three years after final completion.

G. *Additional insureds*: The Contractor's commercial general liability, automobile liability, umbrella or excess, and pollution liability policies shall include and list as additional insureds Owner and Engineer, and any individuals or entities identified in the Supplementary Conditions; include coverage for the respective officers, directors, members, partners, employees, agents, consultants, and subcontractors of each and any of all such additional insureds; and the insurance afforded to these additional insureds shall provide primary coverage for all claims covered thereby (including as applicable those arising from both ongoing and completed operations) on a non-contributory basis. Contractor shall obtain all necessary endorsements to support these requirements.

H. *Contractor's professional liability insurance*: If Contractor will provide or furnish professional services under this Contract, through a delegation of professional design services or otherwise, then Contractor shall be responsible for purchasing and maintaining applicable professional liability insurance. This insurance shall provide protection against claims arising out of performance of professional design or related services, and caused by a negligent error, omission, or act for which the insured party is legally liable. It shall be maintained throughout the duration of the Contract and for a minimum of two years after Substantial Completion. If such professional design services are performed by a Subcontractor, and not by Contractor itself, then the requirements of this paragraph may be satisfied through the purchasing and maintenance of such insurance by such Subcontractor.

I. *General provisions*: The policies of insurance required by this Paragraph 6.03 shall:

1. include at least the specific coverages provided in this Article.
2. be written for not less than the limits of liability provided in this Article and in the Supplementary Conditions, or required by Laws or Regulations, whichever is greater.
3. contain a provision or endorsement that the coverage afforded will not be canceled, materially changed, or renewal refused until at least 10 days prior written notice has been given to Contractor. Within three days of receipt of any such written notice, Contractor shall provide a copy of the notice to Owner, Engineer, and each other insured under the policy.
4. remain in effect at least until final payment (and longer if expressly required in this Article) and at all times thereafter when Contractor may be correcting, removing, or replacing defective Work as a warranty or correction obligation, or otherwise, or returning to the Site to conduct other tasks arising from the Contract Documents.
5. be appropriate for the Work being performed and provide protection from claims that may arise out of or result from Contractor's performance of the Work and Contractor's other obligations under the Contract Documents, whether it is to be performed by Contractor, any Subcontractor or Supplier, or by anyone directly or indirectly employed by any of them to perform any of the Work, or by anyone for whose acts any of them may be liable.

J. The coverage requirements for specific policies of insurance must be met by such policies, and not by reference to excess or umbrella insurance provided in other policies.

Copyright © 2013 National Society of Professional Engineers, American Council of Engineering Companies, and American Society of Civil Engineers. All rights reserved.

6.04 *Owner's Liability Insurance*

A. In addition to the insurance required to be provided by Contractor under Paragraph 6.03, Owner, at Owner's option, may purchase and maintain at Owner's expense Owner's own liability insurance as will protect Owner against claims which may arise from operations under the Contract Documents.

B. Owner's liability policies, if any, operate separately and independently from policies required to be provided by Contractor, and Contractor cannot rely upon Owner's liability policies for any of Contractor's obligations to the Owner, Engineer, or third parties.

6.05 *Property Insurance*

A. *Builder's Risk*: Unless otherwise provided in the Supplementary Conditions, Contractor shall purchase and maintain builder's risk insurance upon the Work on a completed value basis, in the amount of the full insurable replacement cost thereof (subject to such deductible amounts as may be provided in the Supplementary Conditions or required by Laws and Regulations). This insurance shall:

1. include the Owner and Contractor as named insureds, and all Subcontractors, and any individuals or entities required by the Supplementary Conditions to be insured under such builder's risk policy, as insureds or named insureds. For purposes of the remainder of this Paragraph 6.05, Paragraphs 6.06 and 6.07, and any corresponding Supplementary Conditions, the parties required to be insured shall collectively be referred to as "insureds."

2. be written on a builder's risk "all risk" policy form that shall at least include insurance for physical loss or damage to the Work, temporary buildings, falsework, and materials and equipment in transit, and shall insure against at least the following perils or causes of loss: fire; lightning; windstorm; riot; civil commotion; terrorism; vehicle impact; aircraft; smoke; theft; vandalism and malicious mischief; mechanical breakdown, boiler explosion, and artificially generated electric current; earthquake; volcanic activity, and other earth movement; flood; collapse; explosion; debris removal; demolition occasioned by enforcement of Laws and Regulations; water damage (other than that caused by flood); and such other perils or causes of loss as may be specifically required by the Supplementary Conditions. If insurance against mechanical breakdown, boiler explosion, and artificially generated electric current; earthquake; volcanic activity, and other earth movement; or flood, are not commercially available under builder's risk policies, by endorsement or otherwise, such insurance may be provided through other insurance policies acceptable to Owner and Contractor.

3. cover, as insured property, at least the following: (a) the Work and all materials, supplies, machinery, apparatus, equipment, fixtures, and other property of a similar nature that are to be incorporated into or used in the preparation, fabrication, construction, erection, or completion of the Work, including Owner-furnished or assigned property; (b) spare parts inventory required within the scope of the Contract; and (c) temporary works which are not intended to form part of the permanent constructed Work but which are intended to provide working access to the Site, or to the Work under construction, or which are intended to provide temporary support for the Work under construction, including scaffolding, form work, fences, shoring, falsework, and temporary structures.

4. cover expenses incurred in the repair or replacement of any insured property (including but not limited to fees and charges of engineers and architects).

Copyright © 2013 National Society of Professional Engineers, American Council of Engineering Companies, and American Society of Civil Engineers. All rights reserved.

5. extend to cover damage or loss to insured property while in temporary storage at the Site or in a storage location outside the Site (but not including property stored at the premises of a manufacturer or Supplier).
6. extend to cover damage or loss to insured property while in transit.
7. allow for partial occupation or use of the Work by Owner, such that those portions of the Work that are not yet occupied or used by Owner shall remain covered by the builder's risk insurance.
8. allow for the waiver of the insurer's subrogation rights, as set forth below.
9. provide primary coverage for all losses and damages caused by the perils or causes of loss covered.
10. not include a co-insurance clause.
11. include an exception for ensuing losses from physical damage or loss with respect to any defective workmanship, design, or materials exclusions.
12. include performance/hot testing and start-up.
13. be maintained in effect, subject to the provisions herein regarding Substantial Completion and partial occupancy or use of the Work by Owner, until the Work is complete.

B. *Notice of Cancellation or Change*: All the policies of insurance (and the certificates or other evidence thereof) required to be purchased and maintained in accordance with this Paragraph 6.05 will contain a provision or endorsement that the coverage afforded will not be canceled or materially changed or renewal refused until at least 10 days prior written notice has been given to the purchasing policyholder. Within three days of receipt of any such written notice, the purchasing policyholder shall provide a copy of the notice to each other insured.

C. *Deductibles*: The purchaser of any required builder's risk or property insurance shall pay for costs not covered because of the application of a policy deductible.

D. *Partial Occupancy or Use by Owner*: If Owner will occupy or use a portion or portions of the Work prior to Substantial Completion of all the Work as provided in Paragraph 15.04, then Owner (directly, if it is the purchaser of the builder's risk policy, or through Contractor) will provide notice of such occupancy or use to the builder's risk insurer. The builder's risk insurance shall not be canceled or permitted to lapse on account of any such partial use or occupancy; rather, those portions of the Work that are occupied or used by Owner may come off the builder's risk policy, while those portions of the Work not yet occupied or used by Owner shall remain covered by the builder's risk insurance.

E. *Additional Insurance*: If Contractor elects to obtain other special insurance to be included in or supplement the builder's risk or property insurance policies provided under this Paragraph 6.05, it may do so at Contractor's expense.

F. *Insurance of Other Property*: If the express insurance provisions of the Contract do not require or address the insurance of a property item or interest, such as tools, construction equipment, or other personal property owned by Contractor, a Subcontractor, or an employee of Contractor or a Subcontractor, then the entity or individual owning such property item will be responsible for deciding whether to insure it, and if so in what amount.

Copyright © 2013 National Society of Professional Engineers, American Council of Engineering Companies, and American Society of Civil Engineers. All rights reserved.

6.06 *Waiver of Rights*

A. All policies purchased in accordance with Paragraph 6.05, expressly including the builder's risk policy, shall contain provisions to the effect that in the event of payment of any loss or damage the insurers will have no rights of recovery against any insureds thereunder, or against Engineer or its consultants, or their officers, directors, members, partners, employees, agents, consultants, or subcontractors. Owner and Contractor waive all rights against each other and the respective officers, directors, members, partners, employees, agents, consultants, and subcontractors of each and any of them, for all losses and damages caused by, arising out of, or resulting from any of the perils or causes of loss covered by such policies and any other property insurance applicable to the Work; and, in addition, waive all such rights against Engineer, its consultants, all Subcontractors, all individuals or entities identified in the Supplementary Conditions as insureds, and the officers, directors, members, partners, employees, agents, consultants, and subcontractors of each and any of them, under such policies for losses and damages so caused. None of the above waivers shall extend to the rights that any party making such waiver may have to the proceeds of insurance held by Owner or Contractor as trustee or fiduciary, or otherwise payable under any policy so issued.

B. Owner waives all rights against Contractor, Subcontractors, and Engineer, and the officers, directors, members, partners, employees, agents, consultants and subcontractors of each and any of them, for:

1. loss due to business interruption, loss of use, or other consequential loss extending beyond direct physical loss or damage to Owner's property or the Work caused by, arising out of, or resulting from fire or other perils whether or not insured by Owner; and

2. loss or damage to the completed Project or part thereof caused by, arising out of, or resulting from fire or other insured peril or cause of loss covered by any property insurance maintained on the completed Project or part thereof by Owner during partial occupancy or use pursuant to Paragraph 15.04, after Substantial Completion pursuant to Paragraph 15.03, or after final payment pursuant to Paragraph 15.06.

C. Any insurance policy maintained by Owner covering any loss, damage or consequential loss referred to in Paragraph 6.06.B shall contain provisions to the effect that in the event of payment of any such loss, damage, or consequential loss, the insurers will have no rights of recovery against Contractor, Subcontractors, or Engineer, or the officers, directors, members, partners, employees, agents, consultants, or subcontractors of each and any of them.

D. Contractor shall be responsible for assuring that the agreement under which a Subcontractor performs a portion of the Work contains provisions whereby the Subcontractor waives all rights against Owner, Contractor, all individuals or entities identified in the Supplementary Conditions as insureds, the Engineer and its consultants, and the officers, directors, members, partners, employees, agents, consultants, and subcontractors of each and any of them, for all losses and damages caused by, arising out of, relating to, or resulting from any of the perils or causes of loss covered by builder's risk insurance and any other property insurance applicable to the Work.

6.07 *Receipt and Application of Property Insurance Proceeds*

A. Any insured loss under the builder's risk and other policies of insurance required by Paragraph 6.05 will be adjusted and settled with the named insured that purchased the

Copyright © 2013 National Society of Professional Engineers, American Council of Engineering Companies, and American Society of Civil Engineers. All rights reserved.

policy. Such named insured shall act as fiduciary for the other insureds, and give notice to such other insureds that adjustment and settlement of a claim is in progress. Any other insured may state its position regarding a claim for insured loss in writing within 15 days after notice of such claim.

B. Proceeds for such insured losses may be made payable by the insurer either jointly to multiple insureds, or to the named insured that purchased the policy in its own right and as fiduciary for other insureds, subject to the requirements of any applicable mortgage clause. A named insured receiving insurance proceeds under the builder's risk and other policies of insurance required by Paragraph 6.05 shall distribute such proceeds in accordance with such agreement as the parties in interest may reach, or as otherwise required under the dispute resolution provisions of this Contract or applicable Laws and Regulations.

C. If no other special agreement is reached, the damaged Work shall be repaired or replaced, the money so received applied on account thereof, and the Work and the cost thereof covered by Change Order, if needed.

ARTICLE 7 – CONTRACTOR'S RESPONSIBILITIES

7.01 *Supervision and Superintendence*

A. Contractor shall supervise, inspect, and direct the Work competently and efficiently, devoting such attention thereto and applying such skills and expertise as may be necessary to perform the Work in accordance with the Contract Documents. Contractor shall be solely responsible for the means, methods, techniques, sequences, and procedures of construction.

B. At all times during the progress of the Work, Contractor shall assign a competent resident superintendent who shall not be replaced without written notice to Owner and Engineer except under extraordinary circumstances.

7.02 *Labor; Working Hours*

A. Contractor shall provide competent, suitably qualified personnel to survey and lay out the Work and perform construction as required by the Contract Documents. Contractor shall at all times maintain good discipline and order at the Site.

B. Except as otherwise required for the safety or protection of persons or the Work or property at the Site or adjacent thereto, and except as otherwise stated in the Contract Documents, all Work at the Site shall be performed during regular working hours, Monday through Friday. Contractor will not perform Work on a Saturday, Sunday, or any legal holiday. Contractor may perform Work outside regular working hours or on Saturdays, Sundays, or legal holidays only with Owner's written consent, which will not be unreasonably withheld.

7.03 *Services, Materials, and Equipment*

A. Unless otherwise specified in the Contract Documents, Contractor shall provide and assume full responsibility for all services, materials, equipment, labor, transportation, construction equipment and machinery, tools, appliances, fuel, power, light, heat, telephone, water, sanitary facilities, temporary facilities, and all other facilities and incidentals necessary for the performance, testing, start up, and completion of the Work, whether or not such items are specifically called for in the Contract Documents.

B. All materials and equipment incorporated into the Work shall be of good quality and new, except as otherwise provided in the Contract Documents. All special warranties and

Copyright © 2013 National Society of Professional Engineers, American Council of Engineering Companies, and American Society of Civil Engineers. All rights reserved.

guarantees required by the Specifications shall expressly run to the benefit of Owner. If required by Engineer, Contractor shall furnish satisfactory evidence (including reports of required tests) as to the source, kind, and quality of materials and equipment.

C. All materials and equipment shall be stored, applied, installed, connected, erected, protected, used, cleaned, and conditioned in accordance with instructions of the applicable Supplier, except as otherwise may be provided in the Contract Documents.

7.04 *"Or Equals"*

A. Whenever an item of material or equipment is specified or described in the Contract Documents by using the name of a proprietary item or the name of a particular Supplier, the Contract Price has been based upon Contractor furnishing such item as specified. The specification or description of such an item is intended to establish the type, function, appearance, and quality required. Unless the specification or description contains or is followed by words reading that no like, equivalent, or "or equal" item is permitted, Contractor may request that Engineer authorize the use of other items of material or equipment, or items from other proposed suppliers under the circumstances described below.

1. If Engineer in its sole discretion determines that an item of material or equipment proposed by Contractor is functionally equal to that named and sufficiently similar so that no change in related Work will be required, Engineer shall deem it an "or equal" item. For the purposes of this paragraph, a proposed item of material or equipment will be considered functionally equal to an item so named if:

a. in the exercise of reasonable judgment Engineer determines that:

1) it is at least equal in materials of construction, quality, durability, appearance, strength, and design characteristics;

2) it will reliably perform at least equally well the function and achieve the results imposed by the design concept of the completed Project as a functioning whole;

3) it has a proven record of performance and availability of responsive service; and

4) it is not objectionable to Owner.

b. Contractor certifies that, if approved and incorporated into the Work:

1) there will be no increase in cost to the Owner or increase in Contract Times; and

2) it will conform substantially to the detailed requirements of the item named in the Contract Documents.

B. *Contractor's Expense*: Contractor shall provide all data in support of any proposed "or equal" item at Contractor's expense.

C. *Engineer's Evaluation and Determination*: Engineer will be allowed a reasonable time to evaluate each "or-equal" request. Engineer may require Contractor to furnish additional data about the proposed "or-equal" item. Engineer will be the sole judge of acceptability. No "or-equal" item will be ordered, furnished, installed, or utilized until Engineer's review is complete and Engineer determines that the proposed item is an "or-equal", which will be evidenced by an approved Shop Drawing or other written communication. Engineer will advise Contractor in writing of any negative determination.

Copyright © 2013 National Society of Professional Engineers, American Council of Engineering Companies, and American Society of Civil Engineers. All rights reserved.

D. *Effect of Engineer's Determination*: Neither approval nor denial of an "or-equal" request shall result in any change in Contract Price. The Engineer's denial of an "or-equal" request shall be final and binding, and may not be reversed through an appeal under any provision of the Contract Documents.

E. *Treatment as a Substitution Request*: If Engineer determines that an item of material or equipment proposed by Contractor does not qualify as an "or-equal" item, Contractor may request that Engineer considered the proposed item as a substitute pursuant to Paragraph 7.05.

7.05 *Substitutes*

A. Unless the specification or description of an item of material or equipment required to be furnished under the Contract Documents contains or is followed by words reading that no substitution is permitted, Contractor may request that Engineer authorize the use of other items of material or equipment under the circumstances described below. To the extent possible such requests shall be made before commencement of related construction at the Site.

1. Contractor shall submit sufficient information as provided below to allow Engineer to determine if the item of material or equipment proposed is functionally equivalent to that named and an acceptable substitute therefor. Engineer will not accept requests for review of proposed substitute items of material or equipment from anyone other than Contractor.

2. The requirements for review by Engineer will be as set forth in Paragraph 7.05.B, as supplemented by the Specifications, and as Engineer may decide is appropriate under the circumstances.

3. Contractor shall make written application to Engineer for review of a proposed substitute item of material or equipment that Contractor seeks to furnish or use. The application:

a. shall certify that the proposed substitute item will:

1) perform adequately the functions and achieve the results called for by the general design,

2) be similar in substance to that specified, and

3) be suited to the same use as that specified.

b. will state:

1) the extent, if any, to which the use of the proposed substitute item will necessitate a change in Contract Times,

2) whether use of the proposed substitute item in the Work will require a change in any of the Contract Documents (or in the provisions of any other direct contract with Owner for other work on the Project) to adapt the design to the proposed substitute item, and

3) whether incorporation or use of the proposed substitute item in connection with the Work is subject to payment of any license fee or royalty.

c. will identify:

1) all variations of the proposed substitute item from that specified, and

Copyright © 2013 National Society of Professional Engineers, American Council of Engineering Companies, and American Society of Civil Engineers. All rights reserved.

2) available engineering, sales, maintenance, repair, and replacement services.

d. shall contain an itemized estimate of all costs or credits that will result directly or indirectly from use of such substitute item, including but not limited to changes in Contract Price, shared savings, costs of redesign, and claims of other contractors affected by any resulting change.

B. *Engineer's Evaluation and Determination*: Engineer will be allowed a reasonable time to evaluate each substitute request, and to obtain comments and direction from Owner. Engineer may require Contractor to furnish additional data about the proposed substitute item. Engineer will be the sole judge of acceptability. No substitute will be ordered, furnished, installed, or utilized until Engineer's review is complete and Engineer determines that the proposed item is an acceptable substitute. Engineer's determination will be evidenced by a Field Order or a proposed Change Order accounting for the substitution itself and all related impacts, including changes in Contract Price or Contract Times. Engineer will advise Contractor in writing of any negative determination.

C. *Special Guarantee*: Owner may require Contractor to furnish at Contractor's expense a special performance guarantee or other surety with respect to any substitute.

D. *Reimbursement of Engineer's Cost*: Engineer will record Engineer's costs in evaluating a substitute proposed or submitted by Contractor. Whether or not Engineer approves a substitute so proposed or submitted by Contractor, Contractor shall reimburse Owner for the reasonable charges of Engineer for evaluating each such proposed substitute. Contractor shall also reimburse Owner for the reasonable charges of Engineer for making changes in the Contract Documents (or in the provisions of any other direct contract with Owner) resulting from the acceptance of each proposed substitute.

E. *Contractor's Expense*: Contractor shall provide all data in support of any proposed substitute at Contractor's expense.

F. *Effect of Engineer's Determination*: If Engineer approves the substitution request, Contractor shall execute the proposed Change Order and proceed with the substitution. The Engineer's denial of a substitution request shall be final and binding, and may not be reversed through an appeal under any provision of the Contract Documents. Contractor may challenge the scope of reimbursement costs imposed under Paragraph 7.05.D, by timely submittal of a Change Proposal.

7.06 *Concerning Subcontractors, Suppliers, and Others*

A. Contractor may retain Subcontractors and Suppliers for the performance of parts of the Work. Such Subcontractors and Suppliers must be acceptable to Owner.

B. Contractor shall retain specific Subcontractors, Suppliers, or other individuals or entities for the performance of designated parts of the Work if required by the Contract to do so.

C. Subsequent to the submittal of Contractor's Bid or final negotiation of the terms of the Contract, Owner may not require Contractor to retain any Subcontractor, Supplier, or other individual or entity to furnish or perform any of the Work against which Contractor has reasonable objection.

D. Prior to entry into any binding subcontract or purchase order, Contractor shall submit to Owner the identity of the proposed Subcontractor or Supplier (unless Owner has already deemed such proposed Subcontractor or Supplier acceptable, during the bidding process or otherwise). Such proposed Subcontractor or Supplier shall be deemed acceptable to Owner unless Owner raises a substantive, reasonable objection within five days.

Copyright © 2013 National Society of Professional Engineers, American Council of Engineering Companies, and American Society of Civil Engineers. All rights reserved.

E. Owner may require the replacement of any Subcontractor, Supplier, or other individual or entity retained by Contractor to perform any part of the Work. Owner also may require Contractor to retain specific replacements; provided, however, that Owner may not require a replacement to which Contractor has a reasonable objection. If Contractor has submitted the identity of certain Subcontractors, Suppliers, or other individuals or entities for acceptance by Owner, and Owner has accepted it (either in writing or by failing to make written objection thereto), then Owner may subsequently revoke the acceptance of any such Subcontractor, Supplier, or other individual or entity so identified solely on the basis of substantive, reasonable objection after due investigation. Contractor shall submit an acceptable replacement for the rejected Subcontractor, Supplier, or other individual or entity.

F. If Owner requires the replacement of any Subcontractor, Supplier, or other individual or entity retained by Contractor to perform any part of the Work, then Contractor shall be entitled to an adjustment in Contract Price or Contract Times, or both, with respect to the replacement; and Contractor shall initiate a Change Proposal for such adjustment within 30 days of Owner's requirement of replacement.

G. No acceptance by Owner of any such Subcontractor, Supplier, or other individual or entity, whether initially or as a replacement, shall constitute a waiver of the right of Owner to the completion of the Work in accordance with the Contract Documents.

H. On a monthly basis Contractor shall submit to Engineer a complete list of all Subcontractors and Suppliers having a direct contract with Contractor, and of all other Subcontractors and Suppliers known to Contractor at the time of submittal.

I. Contractor shall be fully responsible to Owner and Engineer for all acts and omissions of the Subcontractors, Suppliers, and other individuals or entities performing or furnishing any of the Work just as Contractor is responsible for Contractor's own acts and omissions.

J. Contractor shall be solely responsible for scheduling and coordinating the work of Subcontractors, Suppliers, and all other individuals or entities performing or furnishing any of the Work.

K. Contractor shall restrict all Subcontractors, Suppliers, and such other individuals or entities performing or furnishing any of the Work from communicating with Engineer or Owner, except through Contractor or in case of an emergency, or as otherwise expressly allowed herein.

L. The divisions and sections of the Specifications and the identifications of any Drawings shall not control Contractor in dividing the Work among Subcontractors or Suppliers or delineating the Work to be performed by any specific trade.

M. All Work performed for Contractor by a Subcontractor or Supplier shall be pursuant to an appropriate contractual agreement that specifically binds the Subcontractor or Supplier to the applicable terms and conditions of the Contract Documents for the benefit of Owner and Engineer.

N. Owner may furnish to any Subcontractor or Supplier, to the extent practicable, information about amounts paid to Contractor on account of Work performed for Contractor by the particular Subcontractor or Supplier.

Copyright © 2013 National Society of Professional Engineers, American Council of Engineering Companies, and American Society of Civil Engineers. All rights reserved.

O. Nothing in the Contract Documents:

1. shall create for the benefit of any such Subcontractor, Supplier, or other individual or entity any contractual relationship between Owner or Engineer and any such Subcontractor, Supplier, or other individual or entity; nor

2. shall create any obligation on the part of Owner or Engineer to pay or to see to the payment of any money due any such Subcontractor, Supplier, or other individual or entity except as may otherwise be required by Laws and Regulations.

7.07 *Patent Fees and Royalties*

A. Contractor shall pay all license fees and royalties and assume all costs incident to the use in the performance of the Work or the incorporation in the Work of any invention, design, process, product, or device which is the subject of patent rights or copyrights held by others. If a particular invention, design, process, product, or device is specified in the Contract Documents for use in the performance of the Work and if, to the actual knowledge of Owner or Engineer, its use is subject to patent rights or copyrights calling for the payment of any license fee or royalty to others, the existence of such rights shall be disclosed by Owner in the Contract Documents.

B. To the fullest extent permitted by Laws and Regulations, Owner shall indemnify and hold harmless Contractor, and its officers, directors, members, partners, employees, agents, consultants, and subcontractors from and against all claims, costs, losses, and damages (including but not limited to all fees and charges of engineers, architects, attorneys, and other professionals, and all court or arbitration or other dispute resolution costs) arising out of or relating to any infringement of patent rights or copyrights incident to the use in the performance of the Work or resulting from the incorporation in the Work of any invention, design, process, product, or device specified in the Contract Documents, but not identified as being subject to payment of any license fee or royalty to others required by patent rights or copyrights.

C. To the fullest extent permitted by Laws and Regulations, Contractor shall indemnify and hold harmless Owner and Engineer, and the officers, directors, members, partners, employees, agents, consultants and subcontractors of each and any of them from and against all claims, costs, losses, and damages (including but not limited to all fees and charges of engineers, architects, attorneys, and other professionals and all court or arbitration or other dispute resolution costs) arising out of or relating to any infringement of patent rights or copyrights incident to the use in the performance of the Work or resulting from the incorporation in the Work of any invention, design, process, product, or device not specified in the Contract Documents.

7.08 *Permits*

A. Unless otherwise provided in the Contract Documents, Contractor shall obtain and pay for all construction permits and licenses. Owner shall assist Contractor, when necessary, in obtaining such permits and licenses. Contractor shall pay all governmental charges and inspection fees necessary for the prosecution of the Work which are applicable at the time of the submission of Contractor's Bid (or when Contractor became bound under a negotiated contract). Owner shall pay all charges of utility owners for connections for providing permanent service to the Work

Copyright © 2013 National Society of Professional Engineers, American Council of Engineering Companies, and American Society of Civil Engineers. All rights reserved.

7.09 *Taxes*

A. Contractor shall pay all sales, consumer, use, and other similar taxes required to be paid by Contractor in accordance with the Laws and Regulations of the place of the Project which are applicable during the performance of the Work.

7.10 *Laws and Regulations*

A. Contractor shall give all notices required by and shall comply with all Laws and Regulations applicable to the performance of the Work. Except where otherwise expressly required by applicable Laws and Regulations, neither Owner nor Engineer shall be responsible for monitoring Contractor's compliance with any Laws or Regulations.

B. If Contractor performs any Work or takes any other action knowing or having reason to know that it is contrary to Laws or Regulations, Contractor shall bear all resulting costs and losses, and shall indemnify and hold harmless Owner and Engineer, and the officers, directors, members, partners, employees, agents, consultants, and subcontractors of each and any of them from and against all claims, costs, losses, and damages (including but not limited to all fees and charges of engineers, architects, attorneys, and other professionals and all court or arbitration or other dispute resolution costs) arising out of or relating to such Work or other action. It shall not be Contractor's responsibility to make certain that the Work described in the Contract Documents is in accordance with Laws and Regulations, but this shall not relieve Contractor of Contractor's obligations under Paragraph 3.03.

C. Owner or Contractor may give notice to the other party of any changes after the submission of Contractor's Bid (or after the date when Contractor became bound under a negotiated contract) in Laws or Regulations having an effect on the cost or time of performance of the Work, including but not limited to changes in Laws or Regulations having an effect on procuring permits and on sales, use, value-added, consumption, and other similar taxes. If Owner and Contractor are unable to agree on entitlement to or on the amount or extent, if any, of any adjustment in Contract Price or Contract Times resulting from such changes, then within 30 days of such notice Contractor may submit a Change Proposal, or Owner may initiate a Claim.

7.11 *Record Documents*

A. Contractor shall maintain in a safe place at the Site one printed record copy of all Drawings, Specifications, Addenda, Change Orders, Work Change Directives, Field Orders, written interpretations and clarifications, and approved Shop Drawings. Contractor shall keep such record documents in good order and annotate them to show changes made during construction. These record documents, together with all approved Samples, will be available to Engineer for reference. Upon completion of the Work, Contractor shall deliver these record documents to Engineer.

7.12 *Safety and Protection*

A. Contractor shall be solely responsible for initiating, maintaining, and supervising all safety precautions and programs in connection with the Work. Such responsibility does not relieve Subcontractors of their responsibility for the safety of persons or property in the performance of their work, nor for compliance with applicable safety Laws and Regulations. Contractor shall take all necessary precautions for the safety of, and shall provide the necessary protection to prevent damage, injury, or loss to:

1. all persons on the Site or who may be affected by the Work;

Copyright © 2013 National Society of Professional Engineers, American Council of Engineering Companies, and American Society of Civil Engineers. All rights reserved.

2. all the Work and materials and equipment to be incorporated therein, whether in storage on or off the Site; and

3. other property at the Site or adjacent thereto, including trees, shrubs, lawns, walks, pavements, roadways, structures, other work in progress, utilities, and Underground Facilities not designated for removal, relocation, or replacement in the course of construction.

B. Contractor shall comply with all applicable Laws and Regulations relating to the safety of persons or property, or to the protection of persons or property from damage, injury, or loss; and shall erect and maintain all necessary safeguards for such safety and protection. Contractor shall notify Owner; the owners of adjacent property, Underground Facilities, and other utilities; and other contractors and utility owners performing work at or adjacent to the Site, when prosecution of the Work may affect them, and shall cooperate with them in the protection, removal, relocation, and replacement of their property or work in progress.

C. Contractor shall comply with the applicable requirements of Owner's safety programs, if any. The Supplementary Conditions identify any Owner's safety programs that are applicable to the Work.

D. Contractor shall inform Owner and Engineer of the specific requirements of Contractor's safety program with which Owner's and Engineer's employees and representatives must comply while at the Site.

E. All damage, injury, or loss to any property referred to in Paragraph 7.12.A.2 or 7.12.A.3 caused, directly or indirectly, in whole or in part, by Contractor, any Subcontractor, Supplier, or any other individual or entity directly or indirectly employed by any of them to perform any of the Work, or anyone for whose acts any of them may be liable, shall be remedied by Contractor at its expense (except damage or loss attributable to the fault of Drawings or Specifications or to the acts or omissions of Owner or Engineer or anyone employed by any of them, or anyone for whose acts any of them may be liable, and not attributable, directly or indirectly, in whole or in part, to the fault or negligence of Contractor or any Subcontractor, Supplier, or other individual or entity directly or indirectly employed by any of them).

F. Contractor's duties and responsibilities for safety and protection shall continue until such time as all the Work is completed and Engineer has issued a notice to Owner and Contractor in accordance with Paragraph 15.06.B that the Work is acceptable (except as otherwise expressly provided in connection with Substantial Completion).

G. Contractor's duties and responsibilities for safety and protection shall resume whenever Contractor or any Subcontractor or Supplier returns to the Site to fulfill warranty or correction obligations, or to conduct other tasks arising from the Contract Documents.

7.13 *Safety Representative*

A. Contractor shall designate a qualified and experienced safety representative at the Site whose duties and responsibilities shall be the prevention of accidents and the maintaining and supervising of safety precautions and programs.

7.14 *Hazard Communication Programs*

A. Contractor shall be responsible for coordinating any exchange of material safety data sheets or other hazard communication information required to be made available to or

Copyright © 2013 National Society of Professional Engineers, American Council of Engineering Companies, and American Society of Civil Engineers. All rights reserved.

exchanged between or among employers at the Site in accordance with Laws or Regulations.

7.15 *Emergencies*

A. In emergencies affecting the safety or protection of persons or the Work or property at the Site or adjacent thereto, Contractor is obligated to act to prevent threatened damage, injury, or loss. Contractor shall give Engineer prompt written notice if Contractor believes that any significant changes in the Work or variations from the Contract Documents have been caused thereby or are required as a result thereof. If Engineer determines that a change in the Contract Documents is required because of the action taken by Contractor in response to such an emergency, a Work Change Directive or Change Order will be issued.

7.16 *Shop Drawings, Samples, and Other Submittals*

A. *Shop Drawing and Sample Submittal Requirements*:

1. Before submitting a Shop Drawing or Sample, Contractor shall have:

a. reviewed and coordinated the Shop Drawing or Sample with other Shop Drawings and Samples and with the requirements of the Work and the Contract Documents;

b. determined and verified all field measurements, quantities, dimensions, specified performance and design criteria, installation requirements, materials, catalog numbers, and similar information with respect thereto;

c. determined and verified the suitability of all materials and equipment offered with respect to the indicated application, fabrication, shipping, handling, storage, assembly, and installation pertaining to the performance of the Work; and

d. determined and verified all information relative to Contractor's responsibilities for means, methods, techniques, sequences, and procedures of construction, and safety precautions and programs incident thereto.

2. Each submittal shall bear a stamp or specific written certification that Contractor has satisfied Contractor's obligations under the Contract Documents with respect to Contractor's review of that submittal, and that Contractor approves the submittal.

3. With each submittal, Contractor shall give Engineer specific written notice of any variations that the Shop Drawing or Sample may have from the requirements of the Contract Documents. This notice shall be set forth in a written communication separate from the Shop Drawings or Sample submittal; and, in addition, in the case of Shop Drawings by a specific notation made on each Shop Drawing submitted to Engineer for review and approval of each such variation.

B. *Submittal Procedures for Shop Drawings and Samples*: Contractor shall submit Shop Drawings and Samples to Engineer for review and approval in accordance with the accepted Schedule of Submittals. Each submittal will be identified as Engineer may require.

1. *Shop Drawings*:

a. Contractor shall submit the number of copies required in the Specifications.

b. Data shown on the Shop Drawings will be complete with respect to quantities, dimensions, specified performance and design criteria, materials, and similar data to show Engineer the services, materials, and equipment Contractor proposes to

Copyright © 2013 National Society of Professional Engineers, American Council of Engineering Companies, and American Society of Civil Engineers. All rights reserved.

provide and to enable Engineer to review the information for the limited purposes required by Paragraph 7.16.D.

2. *Samples*:

   a. Contractor shall submit the number of Samples required in the Specifications.

   b. Contractor shall clearly identify each Sample as to material, Supplier, pertinent data such as catalog numbers, the use for which intended and other data as Engineer may require to enable Engineer to review the submittal for the limited purposes required by Paragraph 7.16.D.

3. Where a Shop Drawing or Sample is required by the Contract Documents or the Schedule of Submittals, any related Work performed prior to Engineer's review and approval of the pertinent submittal will be at the sole expense and responsibility of Contractor.

C. *Other Submittals*: Contractor shall submit other submittals to Engineer in accordance with the accepted Schedule of Submittals, and pursuant to the applicable terms of the Specifications.

D. *Engineer's Review*:

1. Engineer will provide timely review of Shop Drawings and Samples in accordance with the Schedule of Submittals acceptable to Engineer. Engineer's review and approval will be only to determine if the items covered by the submittals will, after installation or incorporation in the Work, conform to the information given in the Contract Documents and be compatible with the design concept of the completed Project as a functioning whole as indicated by the Contract Documents.

2. Engineer's review and approval will not extend to means, methods, techniques, sequences, or procedures of construction or to safety precautions or programs incident thereto.

3. Engineer's review and approval of a separate item as such will not indicate approval of the assembly in which the item functions.

4. Engineer's review and approval of a Shop Drawing or Sample shall not relieve Contractor from responsibility for any variation from the requirements of the Contract Documents unless Contractor has complied with the requirements of Paragraph 7.16.A.3 and Engineer has given written approval of each such variation by specific written notation thereof incorporated in or accompanying the Shop Drawing or Sample. Engineer will document any such approved variation from the requirements of the Contract Documents in a Field Order.

5. Engineer's review and approval of a Shop Drawing or Sample shall not relieve Contractor from responsibility for complying with the requirements of Paragraph 7.16.A and B.

6. Engineer's review and approval of a Shop Drawing or Sample, or of a variation from the requirements of the Contract Documents, shall not, under any circumstances, change the Contract Times or Contract Price, unless such changes are included in a Change Order.

7. Neither Engineer's receipt, review, acceptance or approval of a Shop Drawing, Sample, or other submittal shall result in such item becoming a Contract Document.

Copyright © 2013 National Society of Professional Engineers, American Council of Engineering Companies, and American Society of Civil Engineers. All rights reserved.

8. Contractor shall perform the Work in compliance with the requirements and commitments set forth in approved Shop Drawings and Samples, subject to the provisions of Paragraph 7.16.D.4.

E. *Resubmittal Procedures*:

1. Contractor shall make corrections required by Engineer and shall return the required number of corrected copies of Shop Drawings and submit, as required, new Samples for review and approval. Contractor shall direct specific attention in writing to revisions other than the corrections called for by Engineer on previous submittals.

2. Contractor shall furnish required submittals with sufficient information and accuracy to obtain required approval of an item with no more than three submittals. Engineer will record Engineer's time for reviewing a fourth or subsequent submittal of a Shop Drawings, sample, or other item requiring approval, and Contractor shall be responsible for Engineer's charges to Owner for such time. Owner may impose a set-off against payments due to Contractor to secure reimbursement for such charges.

3. If Contractor requests a change of a previously approved submittal item, Contractor shall be responsible for Engineer's charges to Owner for its review time, and Owner may impose a set-off against payments due to Contractor to secure reimbursement for such charges, unless the need for such change is beyond the control of Contractor.

7.17 *Contractor's General Warranty and Guarantee*

A. Contractor warrants and guarantees to Owner that all Work will be in accordance with the Contract Documents and will not be defective. Engineer and its officers, directors, members, partners, employees, agents, consultants, and subcontractors shall be entitled to rely on Contractor's warranty and guarantee.

B. Contractor's warranty and guarantee hereunder excludes defects or damage caused by:

1. abuse, modification, or improper maintenance or operation by persons other than Contractor, Subcontractors, Suppliers, or any other individual or entity for whom Contractor is responsible; or

2. normal wear and tear under normal usage.

C. Contractor's obligation to perform and complete the Work in accordance with the Contract Documents shall be absolute. None of the following will constitute an acceptance of Work that is not in accordance with the Contract Documents or a release of Contractor's obligation to perform the Work in accordance with the Contract Documents:

1. observations by Engineer;

2. recommendation by Engineer or payment by Owner of any progress or final payment;

3. the issuance of a certificate of Substantial Completion by Engineer or any payment related thereto by Owner;

4. use or occupancy of the Work or any part thereof by Owner;

5. any review and approval of a Shop Drawing or Sample submittal;

6. the issuance of a notice of acceptability by Engineer;

7. any inspection, test, or approval by others; or

8. any correction of defective Work by Owner.

Copyright © 2013 National Society of Professional Engineers, American Council of Engineering Companies, and American Society of Civil Engineers. All rights reserved.

D. If the Contract requires the Contractor to accept the assignment of a contract entered into by Owner, then the specific warranties, guarantees, and correction obligations contained in the assigned contract shall govern with respect to Contractor's performance obligations to Owner for the Work described in the assigned contract.

7.18 *Indemnification*

A. To the fullest extent permitted by Laws and Regulations, and in addition to any other obligations of Contractor under the Contract or otherwise, Contractor shall indemnify and hold harmless Owner and Engineer, and the officers, directors, members, partners, employees, agents, consultants and subcontractors of each and any of them from and against all claims, costs, losses, and damages (including but not limited to all fees and charges of engineers, architects, attorneys, and other professionals and all court or arbitration or other dispute resolution costs) arising out of or relating to the performance of the Work, provided that any such claim, cost, loss, or damage is attributable to bodily injury, sickness, disease, or death, or to injury to or destruction of tangible property (other than the Work itself), including the loss of use resulting therefrom but only to the extent caused by any negligent act or omission of Contractor, any Subcontractor, any Supplier, or any individual or entity directly or indirectly employed by any of them to perform any of the Work or anyone for whose acts any of them may be liable.

B. In any and all claims against Owner or Engineer or any of their officers, directors, members, partners, employees, agents, consultants, or subcontractors by any employee (or the survivor or personal representative of such employee) of Contractor, any Subcontractor, any Supplier, or any individual or entity directly or indirectly employed by any of them to perform any of the Work, or anyone for whose acts any of them may be liable, the indemnification obligation under Paragraph 7.18.A shall not be limited in any way by any limitation on the amount or type of damages, compensation, or benefits payable by or for Contractor or any such Subcontractor, Supplier, or other individual or entity under workers' compensation acts, disability benefit acts, or other employee benefit acts.

C. The indemnification obligations of Contractor under Paragraph 7.18.A shall not extend to the liability of Engineer and Engineer's officers, directors, members, partners, employees, agents, consultants and subcontractors arising out of:

1. the preparation or approval of, or the failure to prepare or approve maps, Drawings, opinions, reports, surveys, Change Orders, designs, or Specifications; or

2. giving directions or instructions, or failing to give them, if that is the primary cause of the injury or damage.

7.19 *Delegation of Professional Design Services*

A. Contractor will not be required to provide professional design services unless such services are specifically required by the Contract Documents for a portion of the Work or unless such services are required to carry out Contractor's responsibilities for construction means, methods, techniques, sequences and procedures. Contractor shall not be required to provide professional services in violation of applicable Laws and Regulations.

B. If professional design services or certifications by a design professional related to systems, materials, or equipment are specifically required of Contractor by the Contract Documents, Owner and Engineer will specify all performance and design criteria that such services must satisfy. Contractor shall cause such services or certifications to be provided by a properly licensed professional, whose signature and seal shall appear on all drawings, calculations, specifications, certifications, and other submittals prepared by such professional. Shop

Copyright © 2013 National Society of Professional Engineers, American Council of Engineering Companies, and American Society of Civil Engineers. All rights reserved.

Drawings and other submittals related to the Work designed or certified by such professional, if prepared by others, shall bear such professional's written approval when submitted to Engineer.

C. Owner and Engineer shall be entitled to rely upon the adequacy, accuracy, and completeness of the services, certifications, or approvals performed by such design professionals, provided Owner and Engineer have specified to Contractor all performance and design criteria that such services must satisfy.

D. Pursuant to this paragraph, Engineer's review and approval of design calculations and design drawings will be only for the limited purpose of checking for conformance with performance and design criteria given and the design concept expressed in the Contract Documents. Engineer's review and approval of Shop Drawings and other submittals (except design calculations and design drawings) will be only for the purpose stated in Paragraph 7.16.D.1.

E. Contractor shall not be responsible for the adequacy of the performance or design criteria specified by Owner or Engineer.

ARTICLE 8 – OTHER WORK AT THE SITE

8.01 *Other Work*

A. In addition to and apart from the Work under the Contract Documents, the Owner may perform other work at or adjacent to the Site. Such other work may be performed by Owner's employees, or through contracts between the Owner and third parties. Owner may also arrange to have third-party utility owners perform work on their utilities and facilities at or adjacent to the Site.

B. If Owner performs other work at or adjacent to the Site with Owner's employees, or through contracts for such other work, then Owner shall give Contractor written notice thereof prior to starting any such other work. If Owner has advance information regarding the start of any utility work at or adjacent to the Site, Owner shall provide such information to Contractor.

C. Contractor shall afford each other contractor that performs such other work, each utility owner performing other work, and Owner, if Owner is performing other work with Owner's employees, proper and safe access to the Site, and provide a reasonable opportunity for the introduction and storage of materials and equipment and the execution of such other work. Contractor shall do all cutting, fitting, and patching of the Work that may be required to properly connect or otherwise make its several parts come together and properly integrate with such other work. Contractor shall not endanger any work of others by cutting, excavating, or otherwise altering such work; provided, however, that Contractor may cut or alter others' work with the written consent of Engineer and the others whose work will be affected.

D. If the proper execution or results of any part of Contractor's Work depends upon work performed by others under this Article 8, Contractor shall inspect such other work and promptly report to Engineer in writing any delays, defects, or deficiencies in such other work that render it unavailable or unsuitable for the proper execution and results of Contractor's Work. Contractor's failure to so report will constitute an acceptance of such other work as fit and proper for integration with Contractor's Work except for latent defects and deficiencies in such other work.

Copyright © 2013 National Society of Professional Engineers, American Council of Engineering Companies, and American Society of Civil Engineers. All rights reserved.

8.02 *Coordination*

A. If Owner intends to contract with others for the performance of other work at or adjacent to the Site, to perform other work at or adjacent to the Site with Owner's employees, or to arrange to have utility owners perform work at or adjacent to the Site, the following will be set forth in the Supplementary Conditions or provided to Contractor prior to the start of any such other work:

1. the identity of the individual or entity that will have authority and responsibility for coordination of the activities among the various contractors;
2. an itemization of the specific matters to be covered by such authority and responsibility; and
3. the extent of such authority and responsibilities.

B. Unless otherwise provided in the Supplementary Conditions, Owner shall have sole authority and responsibility for such coordination.

8.03 *Legal Relationships*

A. If, in the course of performing other work at or adjacent to the Site for Owner, the Owner's employees, any other contractor working for Owner, or anyone for whom Owner is responsible, or any utility owner causes damage to the Work or to the property of Contractor or its Subcontractors, or delays, disrupts, interferes with, or increases the scope or cost of the performance of the Work, through actions or inaction, then Contractor shall be entitled to an equitable adjustment in the Contract Price or the Contract Times, or both. Contractor must submit any Change Proposal seeking an equitable adjustment in the Contract Price or the Contract Times under this paragraph within 30 days of the damaging, delaying, disrupting, or interfering event. The entitlement to, and extent of, any such equitable adjustment shall take into account information (if any) regarding such other work that was provided to Contractor in the Contract Documents prior to the submittal of the Bid or the final negotiation of the terms of the Contract. When applicable, any such equitable adjustment in Contract Price shall be conditioned on Contractor assigning to Owner all Contractor's rights against such other contractor or utility owner with respect to the damage, delay, disruption, or interference that is the subject of the adjustment. Contractor's entitlement to an adjustment of the Contract Times is conditioned on such adjustment being essential to Contractor's ability to complete the Work within the Contract Times.

B. Contractor shall take reasonable and customary measures to avoid damaging, delaying, disrupting, or interfering with the work of Owner, any other contractor, or any utility owner performing other work at or adjacent to the Site. If Contractor fails to take such measures and as a result damages, delays, disrupts, or interferes with the work of any such other contractor or utility owner, then Owner may impose a set-off against payments due to Contractor, and assign to such other contractor or utility owner the Owner's contractual rights against Contractor with respect to the breach of the obligations set forth in this paragraph.

C. When Owner is performing other work at or adjacent to the Site with Owner's employees, Contractor shall be liable to Owner for damage to such other work, and for the reasonable direct delay, disruption, and interference costs incurred by Owner as a result of Contractor's failure to take reasonable and customary measures with respect to Owner's other work. In response to such damage, delay, disruption, or interference, Owner may impose a set-off against payments due to Contractor.

Copyright © 2013 National Society of Professional Engineers, American Council of Engineering Companies, and American Society of Civil Engineers. All rights reserved.

D. If Contractor damages, delays, disrupts, or interferes with the work of any other contractor, or any utility owner performing other work at or adjacent to the Site, through Contractor's failure to take reasonable and customary measures to avoid such impacts, or if any claim arising out of Contractor's actions, inactions, or negligence in performance of the Work at or adjacent to the Site is made by any such other contractor or utility owner against Contractor, Owner, or Engineer, then Contractor shall (1) promptly attempt to settle the claim as to all parties through negotiations with such other contractor or utility owner, or otherwise resolve the claim by arbitration or other dispute resolution proceeding or at law, and (2) indemnify and hold harmless Owner and Engineer, and the officers, directors, members, partners, employees, agents, consultants and subcontractors of each and any of them from and against any such claims, and against all costs, losses, and damages (including but not limited to all fees and charges of engineers, architects, attorneys, and other professionals and all court or arbitration or other dispute resolution costs) arising out of or relating to such damage, delay, disruption, or interference.

ARTICLE 9 – OWNER'S RESPONSIBILITIES

9.01 *Communications to Contractor*

A. Except as otherwise provided in these General Conditions, Owner shall issue all communications to Contractor through Engineer.

9.02 *Replacement of Engineer*

A. Owner may at its discretion appoint an engineer to replace Engineer, provided Contractor makes no reasonable objection to the replacement engineer. The replacement engineer's status under the Contract Documents shall be that of the former Engineer.

9.03 *Furnish Data*

A. Owner shall promptly furnish the data required of Owner under the Contract Documents.

9.04 *Pay When Due*

A. Owner shall make payments to Contractor when they are due as provided in the Agreement.

9.05 *Lands and Easements; Reports, Tests, and Drawings*

A. Owner's duties with respect to providing lands and easements are set forth in Paragraph 5.01.

B. Owner's duties with respect to providing engineering surveys to establish reference points are set forth in Paragraph 4.03.

C. Article 5 refers to Owner's identifying and making available to Contractor copies of reports of explorations and tests of conditions at the Site, and drawings of physical conditions relating to existing surface or subsurface structures at the Site.

9.06 *Insurance*

A. Owner's responsibilities, if any, with respect to purchasing and maintaining liability and property insurance are set forth in Article 6.

9.07 *Change Orders*

A. Owner's responsibilities with respect to Change Orders are set forth in Article 11.

Copyright © 2013 National Society of Professional Engineers, American Council of Engineering Companies, and American Society of Civil Engineers. All rights reserved.

9.08 *Inspections, Tests, and Approvals*

A. Owner's responsibility with respect to certain inspections, tests, and approvals is set forth in Paragraph 14.02.B.

9.09 *Limitations on Owner's Responsibilities*

A. The Owner shall not supervise, direct, or have control or authority over, nor be responsible for, Contractor's means, methods, techniques, sequences, or procedures of construction, or the safety precautions and programs incident thereto, or for any failure of Contractor to comply with Laws and Regulations applicable to the performance of the Work. Owner will not be responsible for Contractor's failure to perform the Work in accordance with the Contract Documents.

9.10 *Undisclosed Hazardous Environmental Condition*

A. Owner's responsibility in respect to an undisclosed Hazardous Environmental Condition is set forth in Paragraph 5.06.

9.11 *Evidence of Financial Arrangements*

A. Upon request of Contractor, Owner shall furnish Contractor reasonable evidence that financial arrangements have been made to satisfy Owner's obligations under the Contract Documents (including obligations under proposed changes in the Work).

9.12 *Safety Programs*

A. While at the Site, Owner's employees and representatives shall comply with the specific applicable requirements of Contractor's safety programs of which Owner has been informed.

B. Owner shall furnish copies of any applicable Owner safety programs to Contractor.

ARTICLE 10 – ENGINEER'S STATUS DURING CONSTRUCTION

10.01 *Owner's Representative*

A. Engineer will be Owner's representative during the construction period. The duties and responsibilities and the limitations of authority of Engineer as Owner's representative during construction are set forth in the Contract.

10.02 *Visits to Site*

A. Engineer will make visits to the Site at intervals appropriate to the various stages of construction as Engineer deems necessary in order to observe as an experienced and qualified design professional the progress that has been made and the quality of the various aspects of Contractor's executed Work. Based on information obtained during such visits and observations, Engineer, for the benefit of Owner, will determine, in general, if the Work is proceeding in accordance with the Contract Documents. Engineer will not be required to make exhaustive or continuous inspections on the Site to check the quality or quantity of the Work. Engineer's efforts will be directed toward providing for Owner a greater degree of confidence that the completed Work will conform generally to the Contract Documents. On the basis of such visits and observations, Engineer will keep Owner informed of the progress of the Work and will endeavor to guard Owner against defective Work.

B. Engineer's visits and observations are subject to all the limitations on Engineer's authority and responsibility set forth in Paragraph 10.08. Particularly, but without limitation, during

Copyright © 2013 National Society of Professional Engineers, American Council of Engineering Companies, and American Society of Civil Engineers. All rights reserved.

or as a result of Engineer's visits or observations of Contractor's Work, Engineer will not supervise, direct, control, or have authority over or be responsible for Contractor's means, methods, techniques, sequences, or procedures of construction, or the safety precautions and programs incident thereto, or for any failure of Contractor to comply with Laws and Regulations applicable to the performance of the Work.

10.03 *Project Representative*

A. If Owner and Engineer have agreed that Engineer will furnish a Resident Project Representative to represent Engineer at the Site and assist Engineer in observing the progress and quality of the Work, then the authority and responsibilities of any such Resident Project Representative will be as provided in the Supplementary Conditions, and limitations on the responsibilities thereof will be as provided in Paragraph 10.08. If Owner designates another representative or agent to represent Owner at the Site who is not Engineer's consultant, agent, or employee, the responsibilities and authority and limitations thereon of such other individual or entity will be as provided in the Supplementary Conditions.

10.04 *Rejecting Defective Work*

A. Engineer has the authority to reject Work in accordance with Article 14.

10.05 *Shop Drawings, Change Orders and Payments*

A. Engineer's authority, and limitations thereof, as to Shop Drawings and Samples, are set forth in Paragraph 7.16.

B. Engineer's authority, and limitations thereof, as to design calculations and design drawings submitted in response to a delegation of professional design services, if any, are set forth in Paragraph 7.19.

C. Engineer's authority as to Change Orders is set forth in Article 11.

D. Engineer's authority as to Applications for Payment is set forth in Article 15.

10.06 *Determinations for Unit Price Work*

A. Engineer will determine the actual quantities and classifications of Unit Price Work performed by Contractor as set forth in Paragraph 13.03.

10.07 *Decisions on Requirements of Contract Documents and Acceptability of Work*

A. Engineer will render decisions regarding the requirements of the Contract Documents, and judge the acceptability of the Work, pursuant to the specific procedures set forth herein for initial interpretations, Change Proposals, and acceptance of the Work. In rendering such decisions and judgments, Engineer will not show partiality to Owner or Contractor, and will not be liable to Owner, Contractor, or others in connection with any proceedings, interpretations, decisions, or judgments conducted or rendered in good faith.

10.08 *Limitations on Engineer's Authority and Responsibilities*

A. Neither Engineer's authority or responsibility under this Article 10 or under any other provision of the Contract, nor any decision made by Engineer in good faith either to exercise or not exercise such authority or responsibility or the undertaking, exercise, or performance of any authority or responsibility by Engineer, shall create, impose, or give rise to any duty in contract, tort, or otherwise owed by Engineer to Contractor, any Subcontractor, any Supplier, any other individual or entity, or to any surety for or employee or agent of any of them.

Copyright © 2013 National Society of Professional Engineers, American Council of Engineering Companies, and American Society of Civil Engineers. All rights reserved.

B. Engineer will not supervise, direct, control, or have authority over or be responsible for Contractor's means, methods, techniques, sequences, or procedures of construction, or the safety precautions and programs incident thereto, or for any failure of Contractor to comply with Laws and Regulations applicable to the performance of the Work. Engineer will not be responsible for Contractor's failure to perform the Work in accordance with the Contract Documents.

C. Engineer will not be responsible for the acts or omissions of Contractor or of any Subcontractor, any Supplier, or of any other individual or entity performing any of the Work.

D. Engineer's review of the final Application for Payment and accompanying documentation and all maintenance and operating instructions, schedules, guarantees, bonds, certificates of inspection, tests and approvals, and other documentation required to be delivered by Paragraph 15.06.A will only be to determine generally that their content complies with the requirements of, and in the case of certificates of inspections, tests, and approvals, that the results certified indicate compliance with the Contract Documents.

E. The limitations upon authority and responsibility set forth in this Paragraph 10.08 shall also apply to the Resident Project Representative, if any.

10.09 *Compliance with Safety Program*

A. While at the Site, Engineer's employees and representatives will comply with the specific applicable requirements of Owner's and Contractor's safety programs (if any) of which Engineer has been informed.

ARTICLE 11 – AMENDING THE CONTRACT DOCUMENTS; CHANGES IN THE WORK

11.01 *Amending and Supplementing Contract Documents*

A. The Contract Documents may be amended or supplemented by a Change Order, a Work Change Directive, or a Field Order.

1. *Change Orders*:

a. If an amendment or supplement to the Contract Documents includes a change in the Contract Price or the Contract Times, such amendment or supplement must be set forth in a Change Order. A Change Order also may be used to establish amendments and supplements of the Contract Documents that do not affect the Contract Price or Contract Times.

b. Owner and Contractor may amend those terms and conditions of the Contract Documents that do not involve (1) the performance or acceptability of the Work, (2) the design (as set forth in the Drawings, Specifications, or otherwise), or (3) other engineering or technical matters, without the recommendation of the Engineer. Such an amendment shall be set forth in a Change Order.

2. *Work Change Directives*: A Work Change Directive will not change the Contract Price or the Contract Times but is evidence that the parties expect that the modification ordered or documented by a Work Change Directive will be incorporated in a subsequently issued Change Order, following negotiations by the parties as to the Work Change Directive's effect, if any, on the Contract Price and Contract Times; or, if negotiations are unsuccessful, by a determination under the terms of the Contract Documents governing adjustments, expressly including Paragraph 11.04 regarding change of Contract Price. Contractor must submit any Change Proposal seeking an

Copyright © 2013 National Society of Professional Engineers, American Council of Engineering Companies, and American Society of Civil Engineers. All rights reserved.

adjustment of the Contract Price or the Contract Times, or both, no later than 30 days after the completion of the Work set out in the Work Change Directive. Owner must submit any Claim seeking an adjustment of the Contract Price or the Contract Times, or both, no later than 60 days after issuance of the Work Change Directive.

3. *Field Orders*: Engineer may authorize minor changes in the Work if the changes do not involve an adjustment in the Contract Price or the Contract Times and are compatible with the design concept of the completed Project as a functioning whole as indicated by the Contract Documents. Such changes will be accomplished by a Field Order and will be binding on Owner and also on Contractor, which shall perform the Work involved promptly. If Contractor believes that a Field Order justifies an adjustment in the Contract Price or Contract Times, or both, then before proceeding with the Work at issue, Contractor shall submit a Change Proposal as provided herein.

11.02 *Owner-Authorized Changes in the Work*

A. Without invalidating the Contract and without notice to any surety, Owner may, at any time or from time to time, order additions, deletions, or revisions in the Work. Such changes shall be supported by Engineer's recommendation, to the extent the change involves the design (as set forth in the Drawings, Specifications, or otherwise), or other engineering or technical matters. Such changes may be accomplished by a Change Order, if Owner and Contractor have agreed as to the effect, if any, of the changes on Contract Times or Contract Price; or by a Work Change Directive. Upon receipt of any such document, Contractor shall promptly proceed with the Work involved; or, in the case of a deletion in the Work, promptly cease construction activities with respect to such deleted Work. Added or revised Work shall be performed under the applicable conditions of the Contract Documents. Nothing in this paragraph shall obligate Contractor to undertake work that Contractor reasonably concludes cannot be performed in a manner consistent with Contractor's safety obligations under the Contract Documents or Laws and Regulations.

11.03 *Unauthorized Changes in the Work*

A. Contractor shall not be entitled to an increase in the Contract Price or an extension of the Contract Times with respect to any work performed that is not required by the Contract Documents, as amended, modified, or supplemented, except in the case of an emergency as provided in Paragraph 7.15 or in the case of uncovering Work as provided in Paragraph 14.05.

11.04 *Change of Contract Price*

A. The Contract Price may only be changed by a Change Order. Any Change Proposal for an adjustment in the Contract Price shall comply with the provisions of Paragraph 11.06. Any Claim for an adjustment of Contract Price shall comply with the provisions of Article 12.

B. An adjustment in the Contract Price will be determined as follows:

1. where the Work involved is covered by unit prices contained in the Contract Documents, then by application of such unit prices to the quantities of the items involved (subject to the provisions of Paragraph 13.03); or

2. where the Work involved is not covered by unit prices contained in the Contract Documents, then by a mutually agreed lump sum (which may include an allowance for overhead and profit not necessarily in accordance with Paragraph 11.04.C.2); or

3. where the Work involved is not covered by unit prices contained in the Contract Documents and the parties do not reach mutual agreement to a lump sum, then on

Copyright © 2013 National Society of Professional Engineers, American Council of Engineering Companies, and American Society of Civil Engineers. All rights reserved.

the basis of the Cost of the Work (determined as provided in Paragraph 13.01) plus a Contractor's fee for overhead and profit (determined as provided in Paragraph 11.04.C).

C. *Contractor's Fee*: When applicable, the Contractor's fee for overhead and profit shall be determined as follows:

1. a mutually acceptable fixed fee; or

2. if a fixed fee is not agreed upon, then a fee based on the following percentages of the various portions of the Cost of the Work:

a. for costs incurred under Paragraphs 13.01.B.1 and 13.01.B.2, the Contractor's fee shall be 15 percent;

b. for costs incurred under Paragraph 13.01.B.3, the Contractor's fee shall be five percent;

c. where one or more tiers of subcontracts are on the basis of Cost of the Work plus a fee and no fixed fee is agreed upon, the intent of Paragraphs 11.04.C.2.a and 11.04.C.2.b is that the Contractor's fee shall be based on: (1) a fee of 15 percent of the costs incurred under Paragraphs 13.01.A.1 and 13.01.A.2 by the Subcontractor that actually performs the Work, at whatever tier, and (2) with respect to Contractor itself and to any Subcontractors of a tier higher than that of the Subcontractor that actually performs the Work, a fee of five percent of the amount (fee plus underlying costs incurred) attributable to the next lower tier Subcontractor; provided, however, that for any such subcontracted work the maximum total fee to be paid by Owner shall be no greater than 27 percent of the costs incurred by the Subcontractor that actually performs the work;

d. no fee shall be payable on the basis of costs itemized under Paragraphs 13.01.B.4, 13.01.B.5, and 13.01.C;

e. the amount of credit to be allowed by Contractor to Owner for any change which results in a net decrease in cost will be the amount of the actual net decrease in cost plus a deduction in Contractor's fee by an amount equal to five percent of such net decrease; and

f. when both additions and credits are involved in any one change, the adjustment in Contractor's fee shall be computed on the basis of the net change in accordance with Paragraphs 11.04.C.2.a through 11.04.C.2.e, inclusive.

11.05 *Change of Contract Times*

A. The Contract Times may only be changed by a Change Order. Any Change Proposal for an adjustment in the Contract Times shall comply with the provisions of Paragraph 11.06. Any Claim for an adjustment in the Contract Times shall comply with the provisions of Article 12.

B. An adjustment of the Contract Times shall be subject to the limitations set forth in Paragraph 4.05, concerning delays in Contractor's progress.

11.06 *Change Proposals*

A. Contractor shall submit a Change Proposal to Engineer to request an adjustment in the Contract Times or Contract Price; appeal an initial decision by Engineer concerning the requirements of the Contract Documents or relating to the acceptability of the Work under the Contract Documents; contest a set-off against payment due; or seek other relief under

Copyright © 2013 National Society of Professional Engineers, American Council of Engineering Companies, and American Society of Civil Engineers. All rights reserved.

the Contract. The Change Proposal shall specify any proposed change in Contract Times or Contract Price, or both, or other proposed relief, and explain the reason for the proposed change, with citations to any governing or applicable provisions of the Contract Documents.

1. *Procedures*: Contractor shall submit each Change Proposal to Engineer promptly (but in no event later than 30 days) after the start of the event giving rise thereto, or after such initial decision. The Contractor shall submit supporting data, including the proposed change in Contract Price or Contract Time (if any), to the Engineer and Owner within 15 days after the submittal of the Change Proposal. The supporting data shall be accompanied by a written statement that the supporting data are accurate and complete, and that any requested time or price adjustment is the entire adjustment to which Contractor believes it is entitled as a result of said event. Engineer will advise Owner regarding the Change Proposal, and consider any comments or response from Owner regarding the Change Proposal.

2. *Engineer's Action*: Engineer will review each Change Proposal and, within 30 days after receipt of the Contractor's supporting data, either deny the Change Proposal in whole, approve it in whole, or deny it in part and approve it in part. Such actions shall be in writing, with a copy provided to Owner and Contractor. If Engineer does not take action on the Change Proposal within 30 days, then either Owner or Contractor may at any time thereafter submit a letter to the other party indicating that as a result of Engineer's inaction the Change Proposal is deemed denied, thereby commencing the time for appeal of the denial under Article 12.

3. *Binding Decision*: Engineer's decision will be final and binding upon Owner and Contractor, unless Owner or Contractor appeals the decision by filing a Claim under Article 12.

B. *Resolution of Certain Change Proposals*: If the Change Proposal does not involve the design (as set forth in the Drawings, Specifications, or otherwise), the acceptability of the Work, or other engineering or technical matters, then Engineer will notify the parties that the Engineer is unable to resolve the Change Proposal. For purposes of further resolution of such a Change Proposal, such notice shall be deemed a denial, and Contractor may choose to seek resolution under the terms of Article 12.

11.07 *Execution of Change Orders*

A. Owner and Contractor shall execute appropriate Change Orders covering:

1. changes in the Contract Price or Contract Times which are agreed to by the parties, including any undisputed sum or amount of time for Work actually performed in accordance with a Work Change Directive;

2. changes in Contract Price resulting from an Owner set-off, unless Contractor has duly contested such set-off;

3. changes in the Work which are: (a) ordered by Owner pursuant to Paragraph 11.02, (b) required because of Owner's acceptance of defective Work under Paragraph 14.04 or Owner's correction of defective Work under Paragraph 14.07, or (c) agreed to by the parties, subject to the need for Engineer's recommendation if the change in the Work involves the design (as set forth in the Drawings, Specifications, or otherwise), or other engineering or technical matters; and

4. changes in the Contract Price or Contract Times, or other changes, which embody the substance of any final and binding results under Paragraph 11.06, or Article 12.

Copyright © 2013 National Society of Professional Engineers, American Council of Engineering Companies, and American Society of Civil Engineers. All rights reserved.

B. If Owner or Contractor refuses to execute a Change Order that is required to be executed under the terms of this Paragraph 11.07, it shall be deemed to be of full force and effect, as if fully executed.

11.08 *Notification to Surety*

A. If the provisions of any bond require notice to be given to a surety of any change affecting the general scope of the Work or the provisions of the Contract Documents (including, but not limited to, Contract Price or Contract Times), the giving of any such notice will be Contractor's responsibility. The amount of each applicable bond will be adjusted to reflect the effect of any such change.

ARTICLE 12 – CLAIMS

12.01 *Claims*

A. *Claims Process*: The following disputes between Owner and Contractor shall be submitted to the Claims process set forth in this Article:

1. Appeals by Owner or Contractor of Engineer's decisions regarding Change Proposals;

2. Owner demands for adjustments in the Contract Price or Contract Times, or other relief under the Contract Documents; and

3. Disputes that Engineer has been unable to address because they do not involve the design (as set forth in the Drawings, Specifications, or otherwise), the acceptability of the Work, or other engineering or technical matters.

B. *Submittal of Claim*: The party submitting a Claim shall deliver it directly to the other party to the Contract promptly (but in no event later than 30 days) after the start of the event giving rise thereto; in the case of appeals regarding Change Proposals within 30 days of the decision under appeal. The party submitting the Claim shall also furnish a copy to the Engineer, for its information only. The responsibility to substantiate a Claim shall rest with the party making the Claim. In the case of a Claim by Contractor seeking an increase in the Contract Times or Contract Price, or both, Contractor shall certify that the Claim is made in good faith, that the supporting data are accurate and complete, and that to the best of Contractor's knowledge and belief the amount of time or money requested accurately reflects the full amount to which Contractor is entitled.

C. *Review and Resolution*: The party receiving a Claim shall review it thoroughly, giving full consideration to its merits. The two parties shall seek to resolve the Claim through the exchange of information and direct negotiations. The parties may extend the time for resolving the Claim by mutual agreement. All actions taken on a Claim shall be stated in writing and submitted to the other party, with a copy to Engineer.

D. *Mediation*:

1. At any time after initiation of a Claim, Owner and Contractor may mutually agree to mediation of the underlying dispute. The agreement to mediate shall stay the Claim submittal and response process.

2. If Owner and Contractor agree to mediation, then after 60 days from such agreement, either Owner or Contractor may unilaterally terminate the mediation process, and the Claim submittal and decision process shall resume as of the date of the termination. If the mediation proceeds but is unsuccessful in resolving the dispute, the Claim

Copyright © 2013 National Society of Professional Engineers, American Council of Engineering Companies, and American Society of Civil Engineers. All rights reserved.

submittal and decision process shall resume as of the date of the conclusion of the mediation, as determined by the mediator.

3. Owner and Contractor shall each pay one-half of the mediator's fees and costs.

E. *Partial Approval*: If the party receiving a Claim approves the Claim in part and denies it in part, such action shall be final and binding unless within 30 days of such action the other party invokes the procedure set forth in Article 17 for final resolution of disputes.

F. *Denial of Claim*: If efforts to resolve a Claim are not successful, the party receiving the Claim may deny it by giving written notice of denial to the other party. If the receiving party does not take action on the Claim within 90 days, then either Owner or Contractor may at any time thereafter submit a letter to the other party indicating that as a result of the inaction, the Claim is deemed denied, thereby commencing the time for appeal of the denial. A denial of the Claim shall be final and binding unless within 30 days of the denial the other party invokes the procedure set forth in Article 17 for the final resolution of disputes.

G. *Final and Binding Results*: If the parties reach a mutual agreement regarding a Claim, whether through approval of the Claim, direct negotiations, mediation, or otherwise; or if a Claim is approved in part and denied in part, or denied in full, and such actions become final and binding; then the results of the agreement or action on the Claim shall be incorporated in a Change Order to the extent they affect the Contract, including the Work, the Contract Times, or the Contract Price.

ARTICLE 13 – COST OF THE WORK; ALLOWANCES; UNIT PRICE WORK

13.01 *Cost of the Work*

A. *Purposes for Determination of Cost of the Work*: The term Cost of the Work means the sum of all costs necessary for the proper performance of the Work at issue, as further defined below. The provisions of this Paragraph 13.01 are used for two distinct purposes:

1. To determine Cost of the Work when Cost of the Work is a component of the Contract Price, under cost-plus-fee, time-and-materials, or other cost-based terms; or

2. To determine the value of a Change Order, Change Proposal, Claim, set-off, or other adjustment in Contract Price. When the value of any such adjustment is determined on the basis of Cost of the Work, Contractor is entitled only to those additional or incremental costs required because of the change in the Work or because of the event giving rise to the adjustment.

B. *Costs Included*: Except as otherwise may be agreed to in writing by Owner, costs included in the Cost of the Work shall be in amounts no higher than those prevailing in the locality of the Project, shall not include any of the costs itemized in Paragraph 13.01.C, and shall include only the following items:

1. Payroll costs for employees in the direct employ of Contractor in the performance of the Work under schedules of job classifications agreed upon by Owner and Contractor. Such employees shall include, without limitation, superintendents, foremen, and other personnel employed full time on the Work. Payroll costs for employees not employed full time on the Work shall be apportioned on the basis of their time spent on the Work. Payroll costs shall include, but not be limited to, salaries and wages plus the cost of fringe benefits, which shall include social security contributions, unemployment, excise, and payroll taxes, workers' compensation, health and retirement benefits, bonuses, sick leave, and vacation and holiday pay applicable

Copyright © 2013 National Society of Professional Engineers, American Council of Engineering Companies, and American Society of Civil Engineers. All rights reserved.

thereto. The expenses of performing Work outside of regular working hours, on Saturday, Sunday, or legal holidays, shall be included in the above to the extent authorized by Owner.

2. Cost of all materials and equipment furnished and incorporated in the Work, including costs of transportation and storage thereof, and Suppliers' field services required in connection therewith. All cash discounts shall accrue to Contractor unless Owner deposits funds with Contractor with which to make payments, in which case the cash discounts shall accrue to Owner. All trade discounts, rebates, and refunds and returns from sale of surplus materials and equipment shall accrue to Owner, and Contractor shall make provisions so that they may be obtained.

3. Payments made by Contractor to Subcontractors for Work performed by Subcontractors. If required by Owner, Contractor shall obtain competitive bids from subcontractors acceptable to Owner and Contractor and shall deliver such bids to Owner, who will then determine, with the advice of Engineer, which bids, if any, will be acceptable. If any subcontract provides that the Subcontractor is to be paid on the basis of Cost of the Work plus a fee, the Subcontractor's Cost of the Work and fee shall be determined in the same manner as Contractor's Cost of the Work and fee as provided in this Paragraph 13.01.

4. Costs of special consultants (including but not limited to engineers, architects, testing laboratories, surveyors, attorneys, and accountants) employed for services specifically related to the Work.

5. Supplemental costs including the following:

    a. The proportion of necessary transportation, travel, and subsistence expenses of Contractor's employees incurred in discharge of duties connected with the Work.

    b. Cost, including transportation and maintenance, of all materials, supplies, equipment, machinery, appliances, office, and temporary facilities at the Site, and hand tools not owned by the workers, which are consumed in the performance of the Work, and cost, less market value, of such items used but not consumed which remain the property of Contractor.

    c. Rentals of all construction equipment and machinery, and the parts thereof, whether rented from Contractor or others in accordance with rental agreements approved by Owner with the advice of Engineer, and the costs of transportation, loading, unloading, assembly, dismantling, and removal thereof. All such costs shall be in accordance with the terms of said rental agreements. The rental of any such equipment, machinery, or parts shall cease when the use thereof is no longer necessary for the Work.

    d. Sales, consumer, use, and other similar taxes related to the Work, and for which Contractor is liable, as imposed by Laws and Regulations.

    e. Deposits lost for causes other than negligence of Contractor, any Subcontractor, or anyone directly or indirectly employed by any of them or for whose acts any of them may be liable, and royalty payments and fees for permits and licenses.

    f. Losses and damages (and related expenses) caused by damage to the Work, not compensated by insurance or otherwise, sustained by Contractor in connection with the performance of the Work (except losses and damages within the deductible amounts of property insurance established in accordance with Paragraph 6.05), provided such losses and damages have resulted from causes

Copyright © 2013 National Society of Professional Engineers, American Council of Engineering Companies, and American Society of Civil Engineers. All rights reserved.

other than the negligence of Contractor, any Subcontractor, or anyone directly or indirectly employed by any of them or for whose acts any of them may be liable. Such losses shall include settlements made with the written consent and approval of Owner. No such losses, damages, and expenses shall be included in the Cost of the Work for the purpose of determining Contractor's fee.

g. The cost of utilities, fuel, and sanitary facilities at the Site.

h. Minor expenses such as communication service at the Site, express and courier services, and similar petty cash items in connection with the Work.

i. The costs of premiums for all bonds and insurance that Contractor is required by the Contract Documents to purchase and maintain.

C. *Costs Excluded*: The term Cost of the Work shall not include any of the following items:

1. Payroll costs and other compensation of Contractor's officers, executives, principals (of partnerships and sole proprietorships), general managers, safety managers, engineers, architects, estimators, attorneys, auditors, accountants, purchasing and contracting agents, expediters, timekeepers, clerks, and other personnel employed by Contractor, whether at the Site or in Contractor's principal or branch office for general administration of the Work and not specifically included in the agreed upon schedule of job classifications referred to in Paragraph 13.01.B.1 or specifically covered by Paragraph 13.01.B.4. The payroll costs and other compensation excluded here are to be considered administrative costs covered by the Contractor's fee.

2. Expenses of Contractor's principal and branch offices other than Contractor's office at the Site.

3. Any part of Contractor's capital expenses, including interest on Contractor's capital employed for the Work and charges against Contractor for delinquent payments.

4. Costs due to the negligence of Contractor, any Subcontractor, or anyone directly or indirectly employed by any of them or for whose acts any of them may be liable, including but not limited to, the correction of defective Work, disposal of materials or equipment wrongly supplied, and making good any damage to property.

5. Other overhead or general expense costs of any kind and the costs of any item not specifically and expressly included in Paragraph 13.01.B.

D. *Contractor's Fee*: When the Work as a whole is performed on the basis of cost-plus, Contractor's fee shall be determined as set forth in the Agreement. When the value of any Work covered by a Change Order, Change Proposal, Claim, set-off, or other adjustment in Contract Price is determined on the basis of Cost of the Work, Contractor's fee shall be determined as set forth in Paragraph 11.04.C.

E. *Documentation*: Whenever the Cost of the Work for any purpose is to be determined pursuant to this Article 13, Contractor will establish and maintain records thereof in accordance with generally accepted accounting practices and submit in a form acceptable to Engineer an itemized cost breakdown together with supporting data.

13.02 *Allowances*

A. It is understood that Contractor has included in the Contract Price all allowances so named in the Contract Documents and shall cause the Work so covered to be performed for such sums and by such persons or entities as may be acceptable to Owner and Engineer.

Copyright © 2013 National Society of Professional Engineers, American Council of Engineering Companies, and American Society of Civil Engineers. All rights reserved.

B. *Cash Allowances*: Contractor agrees that:

1. the cash allowances include the cost to Contractor (less any applicable trade discounts) of materials and equipment required by the allowances to be delivered at the Site, and all applicable taxes; and

2. Contractor's costs for unloading and handling on the Site, labor, installation, overhead, profit, and other expenses contemplated for the cash allowances have been included in the Contract Price and not in the allowances, and no demand for additional payment on account of any of the foregoing will be valid.

C. *Contingency Allowance*: Contractor agrees that a contingency allowance, if any, is for the sole use of Owner to cover unanticipated costs.

D. Prior to final payment, an appropriate Change Order will be issued as recommended by Engineer to reflect actual amounts due Contractor on account of Work covered by allowances, and the Contract Price shall be correspondingly adjusted.

13.03 *Unit Price Work*

A. Where the Contract Documents provide that all or part of the Work is to be Unit Price Work, initially the Contract Price will be deemed to include for all Unit Price Work an amount equal to the sum of the unit price for each separately identified item of Unit Price Work times the estimated quantity of each item as indicated in the Agreement.

B. The estimated quantities of items of Unit Price Work are not guaranteed and are solely for the purpose of comparison of Bids and determining an initial Contract Price. Payments to Contractor for Unit Price Work will be based on actual quantities.

C. Each unit price will be deemed to include an amount considered by Contractor to be adequate to cover Contractor's overhead and profit for each separately identified item.

D. Engineer will determine the actual quantities and classifications of Unit Price Work performed by Contractor. Engineer will review with Contractor the Engineer's preliminary determinations on such matters before rendering a written decision thereon (by recommendation of an Application for Payment or otherwise). Engineer's written decision thereon will be final and binding (except as modified by Engineer to reflect changed factual conditions or more accurate data) upon Owner and Contractor, subject to the provisions of the following paragraph.

E. Within 30 days of Engineer's written decision under the preceding paragraph, Contractor may submit a Change Proposal, or Owner may file a Claim, seeking an adjustment in the Contract Price if:

1. the quantity of any item of Unit Price Work performed by Contractor differs materially and significantly from the estimated quantity of such item indicated in the Agreement;

2. there is no corresponding adjustment with respect to any other item of Work; and

3. Contractor believes that it is entitled to an increase in Contract Price as a result of having incurred additional expense or Owner believes that Owner is entitled to a decrease in Contract Price, and the parties are unable to agree as to the amount of any such increase or decrease.

Copyright © 2013 National Society of Professional Engineers, American Council of Engineering Companies, and American Society of Civil Engineers. All rights reserved.

ARTICLE 14 – TESTS AND INSPECTIONS; CORRECTION, REMOVAL OR ACCEPTANCE OF DEFECTIVE WORK

14.01 *Access to Work*

A. Owner, Engineer, their consultants and other representatives and personnel of Owner, independent testing laboratories, and authorities having jurisdiction will have access to the Site and the Work at reasonable times for their observation, inspection, and testing. Contractor shall provide them proper and safe conditions for such access and advise them of Contractor's safety procedures and programs so that they may comply therewith as applicable.

14.02 *Tests, Inspections, and Approvals*

A. Contractor shall give Engineer timely notice of readiness of the Work (or specific parts thereof) for all required inspections and tests, and shall cooperate with inspection and testing personnel to facilitate required inspections and tests.

B. Owner shall retain and pay for the services of an independent inspector, testing laboratory, or other qualified individual or entity to perform all inspections and tests expressly required by the Contract Documents to be furnished and paid for by Owner, except that costs incurred in connection with tests or inspections of covered Work shall be governed by the provisions of Paragraph 14.05.

C. If Laws or Regulations of any public body having jurisdiction require any Work (or part thereof) specifically to be inspected, tested, or approved by an employee or other representative of such public body, Contractor shall assume full responsibility for arranging and obtaining such inspections, tests, or approvals, pay all costs in connection therewith, and furnish Engineer the required certificates of inspection or approval.

D. Contractor shall be responsible for arranging, obtaining, and paying for all inspections and tests required:

1. by the Contract Documents, unless the Contract Documents expressly allocate responsibility for a specific inspection or test to Owner;

2. to attain Owner's and Engineer's acceptance of materials or equipment to be incorporated in the Work;

3. by manufacturers of equipment furnished under the Contract Documents;

4. for testing, adjusting, and balancing of mechanical, electrical, and other equipment to be incorporated into the Work; and

5. for acceptance of materials, mix designs, or equipment submitted for approval prior to Contractor's purchase thereof for incorporation in the Work.

Such inspections and tests shall be performed by independent inspectors, testing laboratories, or other qualified individuals or entities acceptable to Owner and Engineer.

E. If the Contract Documents require the Work (or part thereof) to be approved by Owner, Engineer, or another designated individual or entity, then Contractor shall assume full responsibility for arranging and obtaining such approvals.

F. If any Work (or the work of others) that is to be inspected, tested, or approved is covered by Contractor without written concurrence of Engineer, Contractor shall, if requested by Engineer, uncover such Work for observation. Such uncovering shall be at Contractor's expense unless Contractor had given Engineer timely notice of Contractor's intention to

Copyright © 2013 National Society of Professional Engineers, American Council of Engineering Companies, and American Society of Civil Engineers. All rights reserved.

cover the same and Engineer had not acted with reasonable promptness in response to such notice.

14.03 *Defective Work*

A. *Contractor's Obligation*: It is Contractor's obligation to assure that the Work is not defective.

B. *Engineer's Authority*: Engineer has the authority to determine whether Work is defective, and to reject defective Work.

C. *Notice of Defects*: Prompt notice of all defective Work of which Owner or Engineer has actual knowledge will be given to Contractor.

D. *Correction, or Removal and Replacement*: Promptly after receipt of written notice of defective Work, Contractor shall correct all such defective Work, whether or not fabricated, installed, or completed, or, if Engineer has rejected the defective Work, remove it from the Project and replace it with Work that is not defective.

E. *Preservation of Warranties*: When correcting defective Work, Contractor shall take no action that would void or otherwise impair Owner's special warranty and guarantee, if any, on said Work.

F. *Costs and Damages*: In addition to its correction, removal, and replacement obligations with respect to defective Work, Contractor shall pay all claims, costs, losses, and damages arising out of or relating to defective Work, including but not limited to the cost of the inspection, testing, correction, removal, replacement, or reconstruction of such defective Work, fines levied against Owner by governmental authorities because the Work is defective, and the costs of repair or replacement of work of others resulting from defective Work. Prior to final payment, if Owner and Contractor are unable to agree as to the measure of such claims, costs, losses, and damages resulting from defective Work, then Owner may impose a reasonable set-off against payments due under Article 15.

14.04 *Acceptance of Defective Work*

A. If, instead of requiring correction or removal and replacement of defective Work, Owner prefers to accept it, Owner may do so (subject, if such acceptance occurs prior to final payment, to Engineer's confirmation that such acceptance is in general accord with the design intent and applicable engineering principles, and will not endanger public safety). Contractor shall pay all claims, costs, losses, and damages attributable to Owner's evaluation of and determination to accept such defective Work (such costs to be approved by Engineer as to reasonableness), and for the diminished value of the Work to the extent not otherwise paid by Contractor. If any such acceptance occurs prior to final payment, the necessary revisions in the Contract Documents with respect to the Work shall be incorporated in a Change Order. If the parties are unable to agree as to the decrease in the Contract Price, reflecting the diminished value of Work so accepted, then Owner may impose a reasonable set-off against payments due under Article 15. If the acceptance of defective Work occurs after final payment, Contractor shall pay an appropriate amount to Owner.

14.05 *Uncovering Work*

A. Engineer has the authority to require additional inspection or testing of the Work, whether or not the Work is fabricated, installed, or completed.

Copyright © 2013 National Society of Professional Engineers, American Council of Engineering Companies, and American Society of Civil Engineers. All rights reserved.

B. If any Work is covered contrary to the written request of Engineer, then Contractor shall, if requested by Engineer, uncover such Work for Engineer's observation, and then replace the covering, all at Contractor's expense.

C. If Engineer considers it necessary or advisable that covered Work be observed by Engineer or inspected or tested by others, then Contractor, at Engineer's request, shall uncover, expose, or otherwise make available for observation, inspection, or testing as Engineer may require, that portion of the Work in question, and provide all necessary labor, material, and equipment.

1. If it is found that the uncovered Work is defective, Contractor shall be responsible for all claims, costs, losses, and damages arising out of or relating to such uncovering, exposure, observation, inspection, and testing, and of satisfactory replacement or reconstruction (including but not limited to all costs of repair or replacement of work of others); and pending Contractor's full discharge of this responsibility the Owner shall be entitled to impose a reasonable set-off against payments due under Article 15.

2. If the uncovered Work is not found to be defective, Contractor shall be allowed an increase in the Contract Price or an extension of the Contract Times, or both, directly attributable to such uncovering, exposure, observation, inspection, testing, replacement, and reconstruction. If the parties are unable to agree as to the amount or extent thereof, then Contractor may submit a Change Proposal within 30 days of the determination that the Work is not defective.

14.06 *Owner May Stop the Work*

A. If the Work is defective, or Contractor fails to supply sufficient skilled workers or suitable materials or equipment, or fails to perform the Work in such a way that the completed Work will conform to the Contract Documents, then Owner may order Contractor to stop the Work, or any portion thereof, until the cause for such order has been eliminated; however, this right of Owner to stop the Work shall not give rise to any duty on the part of Owner to exercise this right for the benefit of Contractor, any Subcontractor, any Supplier, any other individual or entity, or any surety for, or employee or agent of any of them.

14.07 *Owner May Correct Defective Work*

A. If Contractor fails within a reasonable time after written notice from Engineer to correct defective Work, or to remove and replace rejected Work as required by Engineer, or if Contractor fails to perform the Work in accordance with the Contract Documents, or if Contractor fails to comply with any other provision of the Contract Documents, then Owner may, after seven days written notice to Contractor, correct or remedy any such deficiency.

B. In exercising the rights and remedies under this Paragraph 14.07, Owner shall proceed expeditiously. In connection with such corrective or remedial action, Owner may exclude Contractor from all or part of the Site, take possession of all or part of the Work and suspend Contractor's services related thereto, and incorporate in the Work all materials and equipment stored at the Site or for which Owner has paid Contractor but which are stored elsewhere. Contractor shall allow Owner, Owner's representatives, agents and employees, Owner's other contractors, and Engineer and Engineer's consultants access to the Site to enable Owner to exercise the rights and remedies under this paragraph.

C. All claims, costs, losses, and damages incurred or sustained by Owner in exercising the rights and remedies under this Paragraph 14.07 will be charged against Contractor as set-offs against payments due under Article 15. Such claims, costs, losses and damages will

Copyright © 2013 National Society of Professional Engineers, American Council of Engineering Companies, and American Society of Civil Engineers. All rights reserved.

include but not be limited to all costs of repair, or replacement of work of others destroyed or damaged by correction, removal, or replacement of Contractor's defective Work.

D. Contractor shall not be allowed an extension of the Contract Times because of any delay in the performance of the Work attributable to the exercise by Owner of Owner's rights and remedies under this Paragraph 14.07.

ARTICLE 15 – PAYMENTS TO CONTRACTOR; SET-OFFS; COMPLETION; CORRECTION PERIOD

15.01 *Progress Payments*

A. *Basis for Progress Payments*: The Schedule of Values established as provided in Article 2 will serve as the basis for progress payments and will be incorporated into a form of Application for Payment acceptable to Engineer. Progress payments on account of Unit Price Work will be based on the number of units completed during the pay period, as determined under the provisions of Paragraph 13.03. Progress payments for cost-based Work will be based on Cost of the Work completed by Contractor during the pay period.

B. *Applications for Payments*:

1. At least 20 days before the date established in the Agreement for each progress payment (but not more often than once a month), Contractor shall submit to Engineer for review an Application for Payment filled out and signed by Contractor covering the Work completed as of the date of the Application and accompanied by such supporting documentation as is required by the Contract Documents. If payment is requested on the basis of materials and equipment not incorporated in the Work but delivered and suitably stored at the Site or at another location agreed to in writing, the Application for Payment shall also be accompanied by a bill of sale, invoice, or other documentation warranting that Owner has received the materials and equipment free and clear of all Liens, and evidence that the materials and equipment are covered by appropriate property insurance, a warehouse bond, or other arrangements to protect Owner's interest therein, all of which must be satisfactory to Owner.

2. Beginning with the second Application for Payment, each Application shall include an affidavit of Contractor stating that all previous progress payments received on account of the Work have been applied on account to discharge Contractor's legitimate obligations associated with prior Applications for Payment.

3. The amount of retainage with respect to progress payments will be as stipulated in the Agreement.

C. *Review of Applications*:

1. Engineer will, within 10 days after receipt of each Application for Payment, including each resubmittal, either indicate in writing a recommendation of payment and present the Application to Owner, or return the Application to Contractor indicating in writing Engineer's reasons for refusing to recommend payment. In the latter case, Contractor may make the necessary corrections and resubmit the Application.

2. Engineer's recommendation of any payment requested in an Application for Payment will constitute a representation by Engineer to Owner, based on Engineer's observations of the executed Work as an experienced and qualified design professional, and on Engineer's review of the Application for Payment and the accompanying data and schedules, that to the best of Engineer's knowledge, information and belief:

Copyright © 2013 National Society of Professional Engineers, American Council of Engineering Companies, and American Society of Civil Engineers. All rights reserved.

a. the Work has progressed to the point indicated;

b. the quality of the Work is generally in accordance with the Contract Documents (subject to an evaluation of the Work as a functioning whole prior to or upon Substantial Completion, the results of any subsequent tests called for in the Contract Documents, a final determination of quantities and classifications for Unit Price Work under Paragraph 13.03, and any other qualifications stated in the recommendation); and

c. the conditions precedent to Contractor's being entitled to such payment appear to have been fulfilled in so far as it is Engineer's responsibility to observe the Work.

3. By recommending any such payment Engineer will not thereby be deemed to have represented that:

a. inspections made to check the quality or the quantity of the Work as it has been performed have been exhaustive, extended to every aspect of the Work in progress, or involved detailed inspections of the Work beyond the responsibilities specifically assigned to Engineer in the Contract; or

b. there may not be other matters or issues between the parties that might entitle Contractor to be paid additionally by Owner or entitle Owner to withhold payment to Contractor.

4. Neither Engineer's review of Contractor's Work for the purposes of recommending payments nor Engineer's recommendation of any payment, including final payment, will impose responsibility on Engineer:

a. to supervise, direct, or control the Work, or

b. for the means, methods, techniques, sequences, or procedures of construction, or the safety precautions and programs incident thereto, or

c. for Contractor's failure to comply with Laws and Regulations applicable to Contractor's performance of the Work, or

d. to make any examination to ascertain how or for what purposes Contractor has used the money paid on account of the Contract Price, or

e. to determine that title to any of the Work, materials, or equipment has passed to Owner free and clear of any Liens.

5. Engineer may refuse to recommend the whole or any part of any payment if, in Engineer's opinion, it would be incorrect to make the representations to Owner stated in Paragraph 15.01.C.2.

6. Engineer will recommend reductions in payment (set-offs) necessary in Engineer's opinion to protect Owner from loss because:

a. the Work is defective, requiring correction or replacement;

b. the Contract Price has been reduced by Change Orders;

c. Owner has been required to correct defective Work in accordance with Paragraph 14.07, or has accepted defective Work pursuant to Paragraph 14.04;

d. Owner has been required to remove or remediate a Hazardous Environmental Condition for which Contractor is responsible; or

Copyright © 2013 National Society of Professional Engineers, American Council of Engineering Companies, and American Society of Civil Engineers. All rights reserved.

e. Engineer has actual knowledge of the occurrence of any of the events that would constitute a default by Contractor and therefore justify termination for cause under the Contract Documents.

D. *Payment Becomes Due*:

1. Ten days after presentation of the Application for Payment to Owner with Engineer's recommendation, the amount recommended (subject to any Owner set-offs) will become due, and when due will be paid by Owner to Contractor.

E. *Reductions in Payment by Owner*:

1. In addition to any reductions in payment (set-offs) recommended by Engineer, Owner is entitled to impose a set-off against payment based on any of the following:

a. claims have been made against Owner on account of Contractor's conduct in the performance or furnishing of the Work, or Owner has incurred costs, losses, or damages on account of Contractor's conduct in the performance or furnishing of the Work, including but not limited to claims, costs, losses, or damages from workplace injuries, adjacent property damage, non-compliance with Laws and Regulations, and patent infringement;

b. Contractor has failed to take reasonable and customary measures to avoid damage, delay, disruption, and interference with other work at or adjacent to the Site;

c. Contractor has failed to provide and maintain required bonds or insurance;

d. Owner has been required to remove or remediate a Hazardous Environmental Condition for which Contractor is responsible;

e. Owner has incurred extra charges or engineering costs related to submittal reviews, evaluations of proposed substitutes, tests and inspections, or return visits to manufacturing or assembly facilities;

f. the Work is defective, requiring correction or replacement;

g. Owner has been required to correct defective Work in accordance with Paragraph 14.07, or has accepted defective Work pursuant to Paragraph 14.04;

h. the Contract Price has been reduced by Change Orders;

i. an event that would constitute a default by Contractor and therefore justify a termination for cause has occurred;

j. liquidated damages have accrued as a result of Contractor's failure to achieve Milestones, Substantial Completion, or final completion of the Work;

k. Liens have been filed in connection with the Work, except where Contractor has delivered a specific bond satisfactory to Owner to secure the satisfaction and discharge of such Liens;

l. there are other items entitling Owner to a set off against the amount recommended.

2. If Owner imposes any set-off against payment, whether based on its own knowledge or on the written recommendations of Engineer, Owner will give Contractor immediate written notice (with a copy to Engineer) stating the reasons for such action and the specific amount of the reduction, and promptly pay Contractor any amount

Copyright © 2013 National Society of Professional Engineers, American Council of Engineering Companies, and American Society of Civil Engineers. All rights reserved.

remaining after deduction of the amount so withheld. Owner shall promptly pay Contractor the amount so withheld, or any adjustment thereto agreed to by Owner and Contractor, if Contractor remedies the reasons for such action. The reduction imposed shall be binding on Contractor unless it duly submits a Change Proposal contesting the reduction.

3. Upon a subsequent determination that Owner's refusal of payment was not justified, the amount wrongfully withheld shall be treated as an amount due as determined by Paragraph 15.01.C.1 and subject to interest as provided in the Agreement.

15.02 *Contractor's Warranty of Title*

A. Contractor warrants and guarantees that title to all Work, materials, and equipment furnished under the Contract will pass to Owner free and clear of (1) all Liens and other title defects, and (2) all patent, licensing, copyright, or royalty obligations, no later than seven days after the time of payment by Owner.

15.03 *Substantial Completion*

A. When Contractor considers the entire Work ready for its intended use Contractor shall notify Owner and Engineer in writing that the entire Work is substantially complete and request that Engineer issue a certificate of Substantial Completion. Contractor shall at the same time submit to Owner and Engineer an initial draft of punch list items to be completed or corrected before final payment.

B. Promptly after Contractor's notification, Owner, Contractor, and Engineer shall make an inspection of the Work to determine the status of completion. If Engineer does not consider the Work substantially complete, Engineer will notify Contractor in writing giving the reasons therefor.

C. If Engineer considers the Work substantially complete, Engineer will deliver to Owner a preliminary certificate of Substantial Completion which shall fix the date of Substantial Completion. Engineer shall attach to the certificate a punch list of items to be completed or corrected before final payment. Owner shall have seven days after receipt of the preliminary certificate during which to make written objection to Engineer as to any provisions of the certificate or attached punch list. If, after considering the objections to the provisions of the preliminary certificate, Engineer concludes that the Work is not substantially complete, Engineer will, within 14 days after submission of the preliminary certificate to Owner, notify Contractor in writing that the Work is not substantially complete, stating the reasons therefor. If Owner does not object to the provisions of the certificate, or if despite consideration of Owner's objections Engineer concludes that the Work is substantially complete, then Engineer will, within said 14 days, execute and deliver to Owner and Contractor a final certificate of Substantial Completion (with a revised punch list of items to be completed or corrected) reflecting such changes from the preliminary certificate as Engineer believes justified after consideration of any objections from Owner.

D. At the time of receipt of the preliminary certificate of Substantial Completion, Owner and Contractor will confer regarding Owner's use or occupancy of the Work following Substantial Completion, review the builder's risk insurance policy with respect to the end of the builder's risk coverage, and confirm the transition to coverage of the Work under a permanent property insurance policy held by Owner. Unless Owner and Contractor agree otherwise in writing, Owner shall bear responsibility for security, operation, protection of the Work, property insurance, maintenance, heat, and utilities upon Owner's use or occupancy of the Work.

Copyright © 2013 National Society of Professional Engineers, American Council of Engineering Companies, and American Society of Civil Engineers. All rights reserved.

E. After Substantial Completion the Contractor shall promptly begin work on the punch list of items to be completed or corrected prior to final payment. In appropriate cases Contractor may submit monthly Applications for Payment for completed punch list items, following the progress payment procedures set forth above.

F. Owner shall have the right to exclude Contractor from the Site after the date of Substantial Completion subject to allowing Contractor reasonable access to remove its property and complete or correct items on the punch list.

15.04 *Partial Use or Occupancy*

A. Prior to Substantial Completion of all the Work, Owner may use or occupy any substantially completed part of the Work which has specifically been identified in the Contract Documents, or which Owner, Engineer, and Contractor agree constitutes a separately functioning and usable part of the Work that can be used by Owner for its intended purpose without significant interference with Contractor's performance of the remainder of the Work, subject to the following conditions:

1. At any time Owner may request in writing that Contractor permit Owner to use or occupy any such part of the Work that Owner believes to be substantially complete. If and when Contractor agrees that such part of the Work is substantially complete, Contractor, Owner, and Engineer will follow the procedures of Paragraph 15.03.A through E for that part of the Work.

2. At any time Contractor may notify Owner and Engineer in writing that Contractor considers any such part of the Work substantially complete and request Engineer to issue a certificate of Substantial Completion for that part of the Work.

3. Within a reasonable time after either such request, Owner, Contractor, and Engineer shall make an inspection of that part of the Work to determine its status of completion. If Engineer does not consider that part of the Work to be substantially complete, Engineer will notify Owner and Contractor in writing giving the reasons therefor. If Engineer considers that part of the Work to be substantially complete, the provisions of Paragraph 15.03 will apply with respect to certification of Substantial Completion of that part of the Work and the division of responsibility in respect thereof and access thereto.

4. No use or occupancy or separate operation of part of the Work may occur prior to compliance with the requirements of Paragraph 6.05 regarding builder's risk or other property insurance.

15.05 *Final Inspection*

A. Upon written notice from Contractor that the entire Work or an agreed portion thereof is complete, Engineer will promptly make a final inspection with Owner and Contractor and will notify Contractor in writing of all particulars in which this inspection reveals that the Work, or agreed portion thereof, is incomplete or defective. Contractor shall immediately take such measures as are necessary to complete such Work or remedy such deficiencies.

15.06 *Final Payment*

A. *Application for Payment*:

1. After Contractor has, in the opinion of Engineer, satisfactorily completed all corrections identified during the final inspection and has delivered, in accordance with the Contract Documents, all maintenance and operating instructions, schedules, guarantees, bonds, certificates or other evidence of insurance, certificates of

Copyright © 2013 National Society of Professional Engineers, American Council of Engineering Companies, and American Society of Civil Engineers. All rights reserved.

inspection, annotated record documents (as provided in Paragraph 7.11), and other documents, Contractor may make application for final payment.

2. The final Application for Payment shall be accompanied (except as previously delivered) by:

   a. all documentation called for in the Contract Documents;

   b. consent of the surety, if any, to final payment;

   c. satisfactory evidence that all title issues have been resolved such that title to all Work, materials, and equipment has passed to Owner free and clear of any Liens or other title defects, or will so pass upon final payment.

   d. a list of all disputes that Contractor believes are unsettled; and

   e. complete and legally effective releases or waivers (satisfactory to Owner) of all Lien rights arising out of the Work, and of Liens filed in connection with the Work.

3. In lieu of the releases or waivers of Liens specified in Paragraph 15.06.A.2 and as approved by Owner, Contractor may furnish receipts or releases in full and an affidavit of Contractor that: (a) the releases and receipts include all labor, services, material, and equipment for which a Lien could be filed; and (b) all payrolls, material and equipment bills, and other indebtedness connected with the Work for which Owner might in any way be responsible, or which might in any way result in liens or other burdens on Owner's property, have been paid or otherwise satisfied. If any Subcontractor or Supplier fails to furnish such a release or receipt in full, Contractor may furnish a bond or other collateral satisfactory to Owner to indemnify Owner against any Lien, or Owner at its option may issue joint checks payable to Contractor and specified Subcontractors and Suppliers.

B. *Engineer's Review of Application and Acceptance*:

1. If, on the basis of Engineer's observation of the Work during construction and final inspection, and Engineer's review of the final Application for Payment and accompanying documentation as required by the Contract Documents, Engineer is satisfied that the Work has been completed and Contractor's other obligations under the Contract have been fulfilled, Engineer will, within ten days after receipt of the final Application for Payment, indicate in writing Engineer's recommendation of final payment and present the Application for Payment to Owner for payment. Such recommendation shall account for any set-offs against payment that are necessary in Engineer's opinion to protect Owner from loss for the reasons stated above with respect to progress payments. At the same time Engineer will also give written notice to Owner and Contractor that the Work is acceptable, subject to the provisions of Paragraph 15.07. Otherwise, Engineer will return the Application for Payment to Contractor, indicating in writing the reasons for refusing to recommend final payment, in which case Contractor shall make the necessary corrections and resubmit the Application for Payment.

C. *Completion of Work*: The Work is complete (subject to surviving obligations) when it is ready for final payment as established by the Engineer's written recommendation of final payment.

D. *Payment Becomes Due*: Thirty days after the presentation to Owner of the final Application for Payment and accompanying documentation, the amount recommended by Engineer (less any further sum Owner is entitled to set off against Engineer's recommendation,

Copyright © 2013 National Society of Professional Engineers, American Council of Engineering Companies, and American Society of Civil Engineers. All rights reserved.

including but not limited to set-offs for liquidated damages and set-offs allowed under the provisions above with respect to progress payments) will become due and shall be paid by Owner to Contractor.

15.07 *Waiver of Claims*

A. The making of final payment will not constitute a waiver by Owner of claims or rights against Contractor. Owner expressly reserves claims and rights arising from unsettled Liens, from defective Work appearing after final inspection pursuant to Paragraph 15.05, from Contractor's failure to comply with the Contract Documents or the terms of any special guarantees specified therein, from outstanding Claims by Owner, or from Contractor's continuing obligations under the Contract Documents.

B. The acceptance of final payment by Contractor will constitute a waiver by Contractor of all claims and rights against Owner other than those pending matters that have been duly submitted or appealed under the provisions of Article 17.

15.08 *Correction Period*

A. If within one year after the date of Substantial Completion (or such longer period of time as may be prescribed by the terms of any applicable special guarantee required by the Contract Documents, or by any specific provision of the Contract Documents), any Work is found to be defective, or if the repair of any damages to the Site, adjacent areas that Contractor has arranged to use through construction easements or otherwise, and other adjacent areas used by Contractor as permitted by Laws and Regulations, is found to be defective, then Contractor shall promptly, without cost to Owner and in accordance with Owner's written instructions:

1. correct the defective repairs to the Site or such other adjacent areas;
2. correct such defective Work;
3. if the defective Work has been rejected by Owner, remove it from the Project and replace it with Work that is not defective, and
4. satisfactorily correct or repair or remove and replace any damage to other Work, to the work of others, or to other land or areas resulting therefrom.

B. If Contractor does not promptly comply with the terms of Owner's written instructions, or in an emergency where delay would cause serious risk of loss or damage, Owner may have the defective Work corrected or repaired or may have the rejected Work removed and replaced. Contractor shall pay all claims, costs, losses, and damages (including but not limited to all fees and charges of engineers, architects, attorneys, and other professionals and all court or arbitration or other dispute resolution costs) arising out of or relating to such correction or repair or such removal and replacement (including but not limited to all costs of repair or replacement of work of others).

C. In special circumstances where a particular item of equipment is placed in continuous service before Substantial Completion of all the Work, the correction period for that item may start to run from an earlier date if so provided in the Specifications.

D. Where defective Work (and damage to other Work resulting therefrom) has been corrected or removed and replaced under this paragraph, the correction period hereunder with respect to such Work will be extended for an additional period of one year after such correction or removal and replacement has been satisfactorily completed.

Copyright © 2013 National Society of Professional Engineers, American Council of Engineering Companies, and American Society of Civil Engineers. All rights reserved.

E. Contractor's obligations under this paragraph are in addition to all other obligations and warranties. The provisions of this paragraph shall not be construed as a substitute for, or a waiver of, the provisions of any applicable statute of limitation or repose.

ARTICLE 16 – SUSPENSION OF WORK AND TERMINATION

16.01 *Owner May Suspend Work*

A. At any time and without cause, Owner may suspend the Work or any portion thereof for a period of not more than 90 consecutive days by written notice to Contractor and Engineer. Such notice will fix the date on which Work will be resumed. Contractor shall resume the Work on the date so fixed. Contractor shall be entitled to an adjustment in the Contract Price or an extension of the Contract Times, or both, directly attributable to any such suspension. Any Change Proposal seeking such adjustments shall be submitted no later than 30 days after the date fixed for resumption of Work.

16.02 *Owner May Terminate for Cause*

A. The occurrence of any one or more of the following events will constitute a default by Contractor and justify termination for cause:

1. Contractor's persistent failure to perform the Work in accordance with the Contract Documents (including, but not limited to, failure to supply sufficient skilled workers or suitable materials or equipment or failure to adhere to the Progress Schedule);

2. Failure of Contractor to perform or otherwise to comply with a material term of the Contract Documents;

3. Contractor's disregard of Laws or Regulations of any public body having jurisdiction; or

4. Contractor's repeated disregard of the authority of Owner or Engineer.

B. If one or more of the events identified in Paragraph 16.02.A occurs, then after giving Contractor (and any surety) ten days written notice that Owner is considering a declaration that Contractor is in default and termination of the contract, Owner may proceed to:

1. declare Contractor to be in default, and give Contractor (and any surety) notice that the Contract is terminated; and

2. enforce the rights available to Owner under any applicable performance bond.

C. Subject to the terms and operation of any applicable performance bond, if Owner has terminated the Contract for cause, Owner may exclude Contractor from the Site, take possession of the Work, incorporate in the Work all materials and equipment stored at the Site or for which Owner has paid Contractor but which are stored elsewhere, and complete the Work as Owner may deem expedient.

D. Owner may not proceed with termination of the Contract under Paragraph 16.02.B if Contractor within seven days of receipt of notice of intent to terminate begins to correct its failure to perform and proceeds diligently to cure such failure.

E. If Owner proceeds as provided in Paragraph 16.02.B, Contractor shall not be entitled to receive any further payment until the Work is completed. If the unpaid balance of the Contract Price exceeds the cost to complete the Work, including all related claims, costs, losses, and damages (including but not limited to all fees and charges of engineers, architects, attorneys, and other professionals) sustained by Owner, such excess will be paid to Contractor. If the cost to complete the Work including such related claims, costs, losses,

Copyright © 2013 National Society of Professional Engineers, American Council of Engineering Companies, and American Society of Civil Engineers. All rights reserved.

and damages exceeds such unpaid balance, Contractor shall pay the difference to Owner. Such claims, costs, losses, and damages incurred by Owner will be reviewed by Engineer as to their reasonableness and, when so approved by Engineer, incorporated in a Change Order. When exercising any rights or remedies under this paragraph, Owner shall not be required to obtain the lowest price for the Work performed.

F. Where Contractor's services have been so terminated by Owner, the termination will not affect any rights or remedies of Owner against Contractor then existing or which may thereafter accrue, or any rights or remedies of Owner against Contractor or any surety under any payment bond or performance bond. Any retention or payment of money due Contractor by Owner will not release Contractor from liability.

G. If and to the extent that Contractor has provided a performance bond under the provisions of Paragraph 6.01.A, the provisions of that bond shall govern over any inconsistent provisions of Paragraphs 16.02.B and 16.02.D.

16.03 *Owner May Terminate For Convenience*

A. Upon seven days written notice to Contractor and Engineer, Owner may, without cause and without prejudice to any other right or remedy of Owner, terminate the Contract. In such case, Contractor shall be paid for (without duplication of any items):

1. completed and acceptable Work executed in accordance with the Contract Documents prior to the effective date of termination, including fair and reasonable sums for overhead and profit on such Work;

2. expenses sustained prior to the effective date of termination in performing services and furnishing labor, materials, or equipment as required by the Contract Documents in connection with uncompleted Work, plus fair and reasonable sums for overhead and profit on such expenses; and

3. other reasonable expenses directly attributable to termination, including costs incurred to prepare a termination for convenience cost proposal.

B. Contractor shall not be paid on account of loss of anticipated overhead, profits, or revenue, or other economic loss arising out of or resulting from such termination.

16.04 *Contractor May Stop Work or Terminate*

A. If, through no act or fault of Contractor, (1) the Work is suspended for more than 90 consecutive days by Owner or under an order of court or other public authority, or (2) Engineer fails to act on any Application for Payment within 30 days after it is submitted, or (3) Owner fails for 30 days to pay Contractor any sum finally determined to be due, then Contractor may, upon seven days written notice to Owner and Engineer, and provided Owner or Engineer do not remedy such suspension or failure within that time, terminate the contract and recover from Owner payment on the same terms as provided in Paragraph 16.03.

B. In lieu of terminating the Contract and without prejudice to any other right or remedy, if Engineer has failed to act on an Application for Payment within 30 days after it is submitted, or Owner has failed for 30 days to pay Contractor any sum finally determined to be due, Contractor may, seven days after written notice to Owner and Engineer, stop the Work until payment is made of all such amounts due Contractor, including interest thereon. The provisions of this paragraph are not intended to preclude Contractor from submitting a Change Proposal for an adjustment in Contract Price or Contract Times or otherwise for

Copyright © 2013 National Society of Professional Engineers, American Council of Engineering Companies, and American Society of Civil Engineers. All rights reserved.

expenses or damage directly attributable to Contractor's stopping the Work as permitted by this paragraph.

ARTICLE 17 – FINAL RESOLUTION OF DISPUTES

17.01 *Methods and Procedures*

A. *Disputes Subject to Final Resolution*: The following disputed matters are subject to final resolution under the provisions of this Article:

1. A timely appeal of an approval in part and denial in part of a Claim, or of a denial in full; and
2. Disputes between Owner and Contractor concerning the Work or obligations under the Contract Documents, and arising after final payment has been made.

B. *Final Resolution of Disputes*: For any dispute subject to resolution under this Article, Owner or Contractor may:

1. elect in writing to invoke the dispute resolution process provided for in the Supplementary Conditions; or
2. agree with the other party to submit the dispute to another dispute resolution process; or
3. if no dispute resolution process is provided for in the Supplementary Conditions or mutually agreed to, give written notice to the other party of the intent to submit the dispute to a court of competent jurisdiction.

ARTICLE 18 – MISCELLANEOUS

18.01 *Giving Notice*

A. Whenever any provision of the Contract Documents requires the giving of written notice, it will be deemed to have been validly given if:

1. delivered in person, by a commercial courier service or otherwise, to the individual or to a member of the firm or to an officer of the corporation for which it is intended; or
2. delivered at or sent by registered or certified mail, postage prepaid, to the last business address known to the sender of the notice.

18.02 *Computation of Times*

A. When any period of time is referred to in the Contract by days, it will be computed to exclude the first and include the last day of such period. If the last day of any such period falls on a Saturday or Sunday or on a day made a legal holiday by the law of the applicable jurisdiction, such day will be omitted from the computation.

18.03 *Cumulative Remedies*

A. The duties and obligations imposed by these General Conditions and the rights and remedies available hereunder to the parties hereto are in addition to, and are not to be construed in any way as a limitation of, any rights and remedies available to any or all of them which are otherwise imposed or available by Laws or Regulations, by special warranty or guarantee, or by other provisions of the Contract. The provisions of this paragraph will be as effective as if repeated specifically in the Contract Documents in connection with each particular duty, obligation, right, and remedy to which they apply.

Copyright © 2013 National Society of Professional Engineers, American Council of Engineering Companies, and American Society of Civil Engineers. All rights reserved.

18.04 *Limitation of Damages*

A. With respect to any and all Change Proposals, Claims, disputes subject to final resolution, and other matters at issue, neither Owner nor Engineer, nor any of their officers, directors, members, partners, employees, agents, consultants, or subcontractors, shall be liable to Contractor for any claims, costs, losses, or damages sustained by Contractor on or in connection with any other project or anticipated project.

18.05 *No Waiver*

A. A party's non-enforcement of any provision shall not constitute a waiver of that provision, nor shall it affect the enforceability of that provision or of the remainder of this Contract.

18.06 *Survival of Obligations*

A. All representations, indemnifications, warranties, and guarantees made in, required by, or given in accordance with the Contract, as well as all continuing obligations indicated in the Contract, will survive final payment, completion, and acceptance of the Work or termination or completion of the Contract or termination of the services of Contractor.

18.07 *Controlling Law*

A. This Contract is to be governed by the law of the state in which the Project is located.

18.08 *Headings*

A. Article and paragraph headings are inserted for convenience only and do not constitute parts of these General Conditions.

Copyright © 2013 National Society of Professional Engineers, American Council of Engineering Companies, and American Society of Civil Engineers. All rights reserved.

SUPPLEMENTARY CONDITIONS TO THE GENERAL CONDITIONS

SECTION 00800

SUPPLEMENTARY CONDITIONS TO THE STANDARD GENERAL CONDITIONS

These Supplementary Conditions amend or supplement the Standard General Conditions of the Construction Contract as indicated below. All provisions in the Standard General Conditions that are not so amended or supplemented remain in full force and effect.

The terms used in the Supplementary Conditions have the meanings stated in the Standard General Conditions. Addition terms used in these Supplementary Conditions have the meanings stated below, which are applicable to both singular and plural thereof. The address system used in these Supplementary Conditions is the same as the address system used in the Standard General Conditions, with the prefix "SC" added thereto.

ARTICLE 1 – DEFINITIONS AND TERMINOLOGY

SC-1.01 Defined Terms

SC-1.01.A Add to the list of definitions in Paragraph 1.01.A by inserting the following as numbered items in their proper alphabetical positions:

Abnormal Weather Conditions – Conditions of extreme or unusual weather for a given region, elevation, or season as determined by Engineer. Extreme or unusual weather that is typical for a given region, elevation, or season will not be considered Abnormal Weather Conditions Abnormal precipitation in the context of project Delays is considered an event with a recurrence interval less frequent than every ten years by a local, reputable weather station.

Standard Specifications – Wherever in these Contract Documents reference is made to Standard Specifications, said reference shall be understood as referring to the most current version of the Washington State Department of Transportation (WSDOT) Standard Specifications for Road, Bridge, and Municipal Construction and all applicable amendments which applicable parts are incorporated herein and made a part of these Contract Documents by specific reference thereto. If requirements contained in these Standard Specifications are in conflict with these Contract Documents, the requirements of the Contract Documents shall prevail.

ARTICLE 2 – PRELIMINARY MATTERS

SC-2.01 Delivery of Bonds and Evidence of Insurance

SC-2.01 Delete Paragraphs 2.01.A, B, and C in their entirety and insert the following in their place:

A. *Bonds*: Engineer shall furnish to Contractor six copies of the Agreement and other Contract Documents bound therewith. Contractor shall execute the Agreement, attach executed copies of the required Bonds and Power of Attorney and submit all copies to Engineer who will forward them to the Owner. Owner shall execute all copies and return two copies to the Contractor. Owner shall also furnish two counterparts or conformed copies to the Engineer and shall retain two copies.

B. *Evidence of Contractor's Insurance*: When Contractor delivers the executed counterparts of the Agreement to Engineer, Contractor shall also deliver to Engineer copies of the policies of insurance (including all endorsements, and identification of applicable self-insured retentions and deductibles) required to be provided by Contractor in Article 6. Contractor may block out (redact) any

confidential premium or pricing information contained in any policy or endorsement furnished under this provision.

C. *Evidence of Owner's Insurance*: After receipt from Contractor of the executed counterparts of the Agreement and all required bonds and insurance documentation, Owner shall promptly deliver to Contractor copies of the policies of insurance to be provided by Owner under Article 6 (if any). Owner may block out (redact) any confidential premium or pricing information contained in any policy or endorsement furnished under this provision.

SC-2.03 Before Starting Construction

SC-2.03.A Add the following new paragraph immediately after Paragraph 2.03.A.3:

4. a preliminary list of construction equipment with hourly rates, owned or rented by the Contractor and all Subcontractors that will be used in the performance of the Work. The equipment list will include information necessary to confirm the hourly rates per the General Conditions and SC-13.01.B.5.c, including make, model, and year of manufacture as well as the horse power, capacity or weight, and accessories.

SC-SC-2.04 Preconstruction Conference; Designation of Authorized Representatives

SC-2.04.A Delete Paragraph 2.04.A in its entirety and insert the following in its place:

Before any Work at the Site is started, a conference will be held to establish a working understanding among the parties as to the Work and to discuss the schedules referred to in Paragraph 2.03.A, procedures for handling Shop Drawings, Samples, and other submittals, processing Applications for Payment, electronic or digital transmittals, and maintaining required records.

The conference shall be attended by authorized representatives of Owner, Engineer, and their consultants; Contractor and its superintendent. The Contractor shall be responsible for ensuring that all major Subcontractors; Suppliers; and other concerned parties attend the conference. All participants at the conference shall be familiar with Project and authorized to conclude matters relating to the Work.

SC-2.05 Initial Acceptance of Schedules

SC-2.05.A Delete Paragraph 2.05.A in its entirety and insert the following in its place:

A. Prior to the first application for payment, all schedules and documents identified in paragraph 2.03.A shall be finalized and acceptable to the Engineer and Owner. No progress payment shall be made to Contractor until acceptable schedules are submitted to Engineer and Owner as provided below. Acceptance of these schedules and documents by either Engineer or Owner will neither impose on Engineer or Owner responsibility for the sequencing, scheduling or progress of the Work and will not interfere with or relieve Contractor from Contractor's full responsibility therefore.

SC-2.05.A Add the following new paragraph immediately after Paragraph 2.05.A.3:

4. Contractor's Schedule of Construction Equipment will be acceptable to Engineer as to form and substance if it provides the necessary information to reference the equipment and establish the hourly rates in accordance with the General Conditions and SC-13.01.B.5.c.

SC-2.06 Electronic Transmittals

SC-2.06.A Add the following new paragraph immediately after Paragraph 2.06.A:

1. Electronic data for Shop Drawings and other submittals may be relied upon if done in accordance with Section 01300.

ARTICLE 4 – COMMENCEMENT AND PROGRESS OF THE WORK

SC-4.01 Commencement of Contract Times; Notice to Proceed

SC-4.01.A Amend the first sentence of Paragraph 4.01.A to read as follows:

Following the execution of the Agreement by the Owner and the Contractor, written Notice to Proceed with the Work shall be given by the Owner to the Contractor. The Contract Time will commence to run on the day indicated in the Notice to Proceed.

SC-4.03 Reference Points

SC-4.03.A Add the following new paragraphs immediately after Paragraph 4.03.A:

1. In accordance with Washington Administrative Code 332-120-030, Contractor shall research records and physical area of Site, including road or street resurfacing projects, for purpose of locating and referencing any known or existing survey monuments. No survey monuments shall be removed or destroyed before a permit is obtained from Washington's Department of Natural Resources.

2. After completion of the activity that caused the removal or destruction of a monument, if applicable, Contractor shall conduct remonumentation activities and file survey monumentation records with Washington Administrative Code 332-120-060.

SC- 4.04 Progress Schedule

SC-4.04.A Delete Paragraph 4.04.A.1 in its entirety and insert the following in its place:

1. Contractor shall submit to Engineer with each application for payment an updated progress schedule reflecting the amount of work completed and adjustments to future work. Such adjustments will be acceptable to Engineer as providing an orderly progression of the Work to completion within any specified milestones and the Contract Time. No progress payment will be made to Contractor until the updated schedules are submitted to and acceptable to Engineer and Owner. Review and acceptance of progress schedules by the Engineer will neither impose on Engineer responsibility for the sequencing, scheduling or progress of the Work, nor interfere with or relieve Contractor from Contractor's full responsibility therefore.

SC-4.05 Delays in Contractors' Progress

SC-4.05.C.2 Amend Paragraph 4.05.C.2 by striking out the following words "abnormal weather conditions;" and inserting the following words "Abnormal Weather Conditions;".

ARTICLE 5 – AVAILABILITY OF LANDS; SUBSURFACE AND PHYSICAL CONDITIONS; HAZARDOUS ENVIRONMENTAL CONDITIONS

SC-5.01 Availability of Lands

SC-5.01 Add the following new paragraph at the end of Paragraph 5.01.C:

If it is necessary or desirable that the Contractor use land outside of the Owner's easement or right-of-way, the Contractor shall obtain consent from the property owner and tenant of the land. The Contractor shall not enter for materials delivery or occupy for

any other purpose with men, tools, equipment, construction materials, or with materials excavated from the site, any private property outside the designated construction easement boundaries or right-of-way without written permission from the property owner and tenant.

SC-5.03 Subsurface and Physical Conditions

SC-5.03.A Amend the first sentence of Paragraph 5.03.A to read as follows:

A. *Reports and Drawings:*

1. Reports are available for geotechnical explorations at the site. Drawings are also available for the recent site improvements project and past projects for the original lagoon installation, lagoon relining, and other site infrastructure development. Reports are available at the Owner's office for viewing during regular business hours.

SC-5.03.B Amend the first sentence of Paragraph 5.03.B to read as follows:

B. *Reliance by Contractor on Technical Data Authorized:* These reports and drawings are not part of the Contract Documents, but the "technical data" contained therein which Contractor may rely, as expressly identified and established above, are incorporated in the Contract Documents by reference. Contractor is not entitled to rely on any other information and data known to or identified by Owner.

SC-5.04 Differing Subsurface or Physical Conditions

SC-5.04.A Add the following new paragraphs at the end of Paragraph 5.04.A:

No claim for an adjustment in the contract price or contract times (or Milestones) will be valid for differing subsurface or physical conditions if procedures of this Paragraph 5.04 are not followed.

SC-5.05 Underground Facilities

SC-5.05.A Add the following new paragraph immediately after Paragraph 5.05.A.2.d:

3. At least 2 but not more than 10 business days before beginning any excavation, the Contractor shall, in accordance with MCA 69-4-502, notify all owners of underground facilities and coordinate the Work with the owners of such underground facilities. The information shown or indicated in the Contract Documents with respect to existing underground facilities is based on information and data obtained from the owners of the facilities without field exploration, and as such, Owner and Engineer are not responsible for the accuracy or completeness of such information or data.

SC-5.06 Hazardous Environmental Conditions

SC-5.06.A Add the following language to the end of Paragraph 5.06.A to read as follows:

A. Municipal solid waste (MSW) hazards, including but not to landfill gas, contact water (leachate), heavy equipment, and waste exist at this site and are within the scope of work for which Contractor is responsible.

ARTICLE 6 – BONDS AND INSURANCE

SC-6.01 Performance, Payment, and Other Bonds

SC-6.01.A Delete the first three sentences of Paragraph 6.01.A in its entirety and insert the following:

A. Contractor shall furnish a combined performance and payment in the full amount of the Agreement, as security for the faithful performance and payment of all Contractor's obligations under the Contract. This bond shall adhere to, at a minimum, the provisions included in the bond forms as made as part of the Contract, and shall remain in effect at least 1 year after the final payment becomes due, except as provided otherwise by Laws and Regulations or by the Contract Documents.

SC-6.03 SC-6.03.I Amend Paragraph 6.03.I.3 by striking out the words "10 days" and replacing them with the words "45 days", and as so amended, Paragraph 6.03.I.3 remains in effect.

SC 6.03 Add the following new paragraph immediately after Paragraph 6.03.J:

K. The limits of liability for the insurance required by Paragraph 6.03 of the General Conditions shall provide coverage for not less than the following amounts or greater where required by Laws and Regulations:

1. Workers' Compensation, and related coverages under Paragraphs 6.03.A.1 and A.2 of the General Conditions:

State:	Statutory
Federal, if applicable (e.g., Longshoreman's):	Statutory
Employer's Liability:	$ "Stop Gap"

2. Contractor's Commercial General Liability under Paragraphs 6.03.B and 6.03.C of the General Conditions:

General Aggregate	$ 1,000,000
Products - Completed Operations Aggregate	$ 1,000,000
Personal and Advertising Injury	$ 1,000,000
Each Occurrence (Bodily Injury and Property Damage)	$ 1,000,000

3. In addition to other requirements in the General Conditions, Coverage will include at a minimum:

   A. Premises – Operations
   B. Operations of Independent Contractor
   C. Contractual Liability
   D. Personal Injury
   E. Products and Completed Operations
   F. Per Project Aggregate
   G. NO Additional Exclusions that modify the standard ISO Commercial General Liability Policy form 1996 (or later) ISO commercial General Liability Form in regard to explosion, collapse, blasting, underground property damage, subsidence, or work performed by subcontractors will be acceptable.

4. Automobile Liability under Paragraph 6.03.D. of the General Conditions:

Bodily Injury:		
Each person	$	1,000,000
Each accident	$	1,000,000
Property Damage:		
Each accident	$	1,000,000
[or]		
Combined Single Limit of	$	1,000,000

SC-6.05 Property Insurance

SC-6.05.A Add the following to Paragraph 6.02.A.2:

A. In addition to the above listed perils, property insurance to include $5,000,000.

SC-6.05.A Add the following to paragraph 6.05.A

14. Cover materials and equipment in transit for incorporation in the Work or stored at the site or at another location prior to being incorporated in the Work, provided that such materials and equipment have been included in an Application for Payment recommended by Engineer.

ARTICLE 7 – CONTRACTOR'S RESPONSIBILITIES

SC-7.02 Labor; Working Hours

SC-7.02C Add the following new paragraph immediately following Paragraph 7.02.B:

Contractors and all its Subcontractors regular working hours shall consist of 10 working hours from Monday through Friday within a typical 11-hour period between 7 am and 6 pm, excluding weekends and all Owner observed holidays. Overtime work is considered a work week in excesses of 40 hours per week. Extraordinary overtime that is related to Owner's offsets per SC-15.01 is more than 50 hours work weeks and any weekend or holiday work.

SC-7.06 Concerning Subcontractors, Suppliers, and Others

SC-7.06.A Add the following to the end of Paragraph 7.06.A:

Contractor shall perform a minimum of 30 percent of the onsite labor with its own employees.

SC-7.10 Laws and Regulations

SC-7.10.D Add the following new paragraphs immediately following Paragraph 7.10.C:

While not intended to be inclusive of all Laws and Regulations for which Contractor may be responsible under Paragraph 7.10, the following Laws or Regulations are included as mandated by state statute:

1. Prevailing Wages:
   a. Contractor shall pay not less than the prevailing wages in accordance with Washington RCW 39.12.020. Certificates of wage payments by Contractor shall be submitted to the Department of Labor, with a copy to Owner, in accordance with RCW 39.12.040 and shall pay all fees associated therewith. Wage certification forms shall be provided by Contractor.
   b. No worker, laborer, or mechanic employed in the performance of any part of this Agreement shall be paid less than the "prevailing rate of wage" as determined by the State Statistician of the Department of Labor and Industries. The schedule of the prevailing wage rates for the locality or localities made a part of this Agreement as though fully set forth herein.
   c. In case a dispute arises as to what are prevailing rates of wages for work of a similar nature and such dispute cannot be adjusted by the parties in interest, including labor and management representatives, the matter shall be referred for arbitration to the Director of the Department of Labor and Industries of the State, and its decision therein shall be final and conclusive and binding on all parties involves in the dispute for by RCW 39.12.060.
   d. Owner does not guarantee that labor can be procured for the minimum wages in the wage scale. The rates of wages listed are minimum only, below which the Contractor cannot pay, and they do not constitute a representation that labor can be procured for the minimum listed. Contractor shall ascertain the wages above minimum set forth that may have to be paid.
2. Apprentices: In accordance with RCW 39.04.320, no less than 15 percent of labor hours shall be performed by apprentices.

SC- 7.12 Safety and Protection

SC-7.12.F Add following new paragraphs immediately after Paragraph 7.12.G:

H. It is expressly understood by the parties to this Agreement that the Contractor is solely responsible for initiating, maintaining, and supervising safety precautions and programs in connection with the Work. The right of the Owner and Engineer to observe or otherwise review the Work and operations shall not relieve the Contractor from any of his covenants and obligations hereunder. Contractor shall incorporate all safety requirements into his construction progress and work schedules including preconstruction and scheduled monthly safety meetings, posted safety rules, tailgate meetings, and site inspections by safety and other inspectors employed by the Contractor.

I. The Contractor shall be responsible for and shall take necessary precautions and provide all material and equipment to protect, shore, brace, support and maintain all underground pipes, conduits, drains, sewers, water mains, gas mains, cables, etc., and other underground construction uncovered in the proximity, or otherwise affected by the construction work performed by him. All pavement, surfacing, driveways, curbs, walks, buildings, grass areas, trees, utility poles or guy wires damaged by the Contractor's operations in the performance of this work shall be

repaired and/or replaced to the satisfaction of the Owner, Engineer, and effected property owner at the Contractor's expense. The Contractor shall also be responsible for all damage to streets, roads, highways, shoulders, ditches, embankments, culverts, bridges, or other public or private property or facility, regardless of location or character, which may be caused by moving, hauling, or otherwise transporting equipment, materials, or men to and from the work or any part of site thereof; whether by him or his subcontractors. The Contractor shall make satisfactory and acceptable arrangements with owner of, or the agency or authority having jurisdiction over, the damaged property or facility concerning its repair or replacement or payment of costs incurred in connection with said damage.

J. The Contractor shall conduct his work so as to interfere as little as possible with public travel, whether vehicular or pedestrian. Whenever it is necessary to cross, obstruct, or close roads, driveways, and walks, whether public or private, the Contractor shall obtain approval from the governing party and shall, at his own expense, provide and maintain suitable and safe bridges, detours, and other temporary expedients for the accommodation of public and private drives before interfering with them. The provisions for temporary expedients will not be required when the Contractor has obtained permission from the owner and tenant of the private property, or from the authority having jurisdiction over public property involved, to obstruct traffic at the designated point.

J. Safety provisions must be entirely adequate and meet with City or State and Federal regulations to protect the public on these streets and roads.

SC-7.18 Indemnification

SC-7.18.A Add the following new paragraph at the end of Paragraph 7.18.A:

While Owner and Engineer may have the right under this Contract to observe or otherwise review the work, progress and operations of the Contractor, it is expressly understood and agreed that such observation shall not relieve the Contractor from any of its covenants and obligations hereunder.

ARTICLE 8 – OTHER WORK AT THE SITE

SC-8.01 Other Work

SC-8.01.E Add the following new paragraph at the end of Paragraph 8.01.D:

Owner will hire an electrician to provide electrical service supply and connections to the various equipment and systems provided by the Contractor. Contractor's equipment supplier (and electrical contractor, if required) is responsible to provide all the electrical systems integral with the equipment for the application (Class 1 Division 1 space). Contractor's responsibility to work closely with the Owner, Owner's electrician, and its subcontractors and suppliers to successfully install, start-up, test, and commission all of the equipment and systems.

ARTICLE 9 – OWNER'S RESPONSIBILITIES

SC-9.13 Owner's Site Representative

SC-9.13 Add the following new paragraph immediately after Paragraph 9.12 of the General Conditions:

SC-9.13 Owner will furnish an "Owner's Site Representative" to represent Owner at the Site and observe the progress and quality of the Work. The Owner's Site Representative

is not Engineer's consultant, agent, or employee. The responsibilities, authorities, and limitations of authority of Owner's Site Representative are as specified for Engineer's RPR, with the exception that the Owner's Site Representative is not directed by the Engineer but is coordinated with the Engineer.

ARTICLE 10 – ENGINEER'S STATUS DURING CONSTRUCTION

SC-10.03 Project Representative

SC-10.03 Add the following new paragraphs immediately after Paragraph 10.03.A:

B. The Resident Project Representative (RPR) will be Engineer's representative at the Site, and will act as directed by and under the supervision of Engineer, and will confer with engineer regarding RPR's actions.

1. General: RPR's dealings in matters pertaining to the Work in general shall be with Engineer and Contractor. RPR's dealings with Subcontractors shall only be through or with the full knowledge and approval of Contractor. RPR shall generally communicate with Owner only with the knowledge of and under the direction of Engineer.

2. Schedules: Review the progress schedule, schedule of Shop Drawing and Sample submittals, and Schedule of Values prepared by Contractor and consult with Engineer concerning acceptability.

3. Conferences and Meetings: Attend meetings with Contractor, such as preconstruction conferences, progress meetings, job conferences, and other Project-related meetings, and prepare and circulate copies of minutes thereof.

4. Liaison:

   a. Serve as Engineer's liaison with Contractor. Working principally through Contractor's authorized representative or designee, assist in providing information regarding the provisions and intent of the Contract Documents.

   b. Assist Engineer in serving as Owner's liaison with Contractor when Contractor's operations affect Owner's on-Site operations.

   c. Assist in obtaining from Owner additional details or information, when required for proper execution of the Work.

5. Interpretation of Contract Documents: Report to Engineer when clarifications and interpretations of the Contract Documents are needed and transmit to Contractor clarifications and interpretations as issued by Engineer.

6. Shop Drawings and Samples:

   a. Record date of receipt of Samples and Contractor-approved Shop Drawings.

   b. Receive Samples which are furnished at the Site by Contractor, and notify Engineer of availability of Samples for examination.

   c. Advise Engineer and Contractor of the commencement of any portion of the Work requiring a Shop Drawing or Sample submittal for which RPR believes that the submittal has not been approved by Engineer.

7. Modifications: Consider and evaluate Contractor's suggestions for modifications in Drawings or Specifications and report such suggestions,

together with RPR's recommendations, if any, to Engineer. Transmit to Contractor in writing decisions as issued by Engineer.

8. Review of Work and Rejection of Defective Work:

    a. Conduct on-Site observations of Contractor's work in progress to assist Engineer in determining if the Work is in general proceeding in accordance with the Contract Documents.

    b. Report to Engineer whenever RPR believes that any part of Contractor's work in progress is defective, will not produce a completed Project that conforms generally to the Contract Documents, or will imperil the integrity of the design concept of the completed Project as a functioning whole as indicated in the Contract Documents, or has been damaged, or does not meet the requirements of any inspection, test or approval required to be made; and advise Engineer of that part of work in progress that RPR believes should be corrected or rejected or should be uncovered for observation, or requires special testing, inspection or approval.

9. Inspections, Tests, and System Start-ups:

    a. Verify that tests, equipment, and systems start-ups and operating and maintenance training are conducted in the presence of appropriate Owner's personnel, and that Contractor maintains adequate records thereof.

    b. Observe, record, and report to Engineer appropriate details relative to the test procedures and systems start-ups.

10. Records:

    a. Prepare a daily report or keep a diary or log book, recording Contractor's hours on the Site, Subcontractors present at the Site, weather conditions, data relative to questions of Change Orders, Field Orders, Work Change Directives, or changed conditions, Site visitors, deliveries of equipment or materials, daily activities, decisions, observations in general, and specific observations in more detail as in the case of observing test procedures; and send copies to Engineer.

    b. Record names, addresses, fax numbers, e-mail addresses, web site locations, and telephone numbers of all Contractors, Subcontractors, and major Suppliers of materials and equipment.

    c. Maintain records for use in preparing Project documentation.

11. Reports:

    a. Furnish to Engineer periodic reports as required of progress of the Work and of Contractor's compliance with the Progress Schedule and schedule of Shop Drawing and Sample submittals.

    b. Draft and recommend to Engineer proposed Change Orders, Work Change Directives, and Field Orders. Obtain backup material from Contractor.

    c. Immediately notify Engineer of the occurrence of any Site accidents, emergencies, acts of God endangering the Work, force majeure or delay events, damage to property by fire or other causes, or the discovery of any Constituent of Concern or Hazardous Environmental Condition.

12. Payment Requests: Review applications for payment with Contractor for compliance with the established procedure for their submission and forward with recommendations to Engineer, noting particularly the relationship of the payment requested to the Schedule of Values, Work completed, and materials and equipment delivered at the Site but not incorporated in the Work.

13. Certificates, Operation and Maintenance Manuals: During the course of the Work, verify that materials and equipment certificates, operation and maintenance manuals and other data required by the Contract Documents to be assembled and furnished by Contractor are applicable to the items actually installed and in accordance with the Contract Documents, and have these documents delivered to Engineer for review and forwarding to Owner prior to payment for that part of the Work.

14. Completion:

    a. Participate in Engineer's visits to the Site to determine Substantial Completion, assist in the determination of Substantial Completion and the preparation of a punch list of items to be completed or corrected.

    b. Participate in Engineer's final visit to the Site to determine completion of the Work, in the company of Owner and Contractor, and prepare a final punch list of items to be completed and deficiencies to be remedied.

    c. Observe whether all items on the final list have been completed or corrected and make recommendations to Engineer concerning acceptance and issuance of the notice of acceptability of the work.

C. The RPR shall not:

1. Authorize any deviation from the Contract Documents or substitution of materials or equipment (including "or-equal" items).

2. Exceed limitations of Engineer's authority as set forth in the Contract Documents.

3. Undertake any of the responsibilities of Contractor, Subcontractors, or Suppliers.

4. Advise on, issue directions relative to, or assume control over any aspect of the means, methods, techniques, sequences or procedures of Contractor's work.

5. Advise on, issue directions regarding, or assume control over security or safety practices, precautions, and programs in connection with the activities or operations of Owner or Contractor.

6. Participate in specialized field or laboratory tests or inspections conducted off-site by others except as specifically authorized by Engineer.

7. Accept Shop Drawing or Sample submittals from anyone other than Contractor.

8. Authorize Owner to occupy the Project in whole or in part.

ARTICLE 11 – AMENDING THE CONTRACT DOCUMENTS; CHANGES IN THE WORK

SC-11.04 Change in Contract Price

SC-11.04D Add the following new paragraph immediately after Paragraph 11.01C:

In the event that Contractor submits request for additional compensation as a result if a change or differing Site Conditions, or as a result of delays, acceleration, or loss of productivity, Owner reserves the right, upon written request, to audit and inspect Contractor's books relating to the project. Within 7 calendar days, Contractor shall make available such books for Owner's auditor. Records subject to review shall include product and equipment invoices, subcontractor and supplier invoices, payroll records, purchase orders, daily timesheets and daily logs, and all other associated costs and records associated with item(s) of requested audit.

ARTICLE 13 – COST OF THE WORK; ALLOWANCES; UNIT PRICE WORK

SC-13.01 Cost of the Work

SC-13.01.B.5.c Delete paragraph 13.01.B.5.c in its entirety and insert the following in its place:

c. The rental of all construction equipment and machinery and parts thereof whether rented from contractor or rented from others. The cost shall be calculated as follows and will include the costs of transportation, loading, unloading, assembly, dismantling and removal thereof for equipment involved only in the changed portion of the work covered under the cost of the Work method. Transportation, loading and assembly costs will not be included for equipment already on the site which is being used for other portions of the Work. The cost of any such equipment, machinery, or parts shall cease when the use thereof is no longer necessary for the Work. Hourly equipment and machinery rates shall be calculated from the Rental Rate Blue Book for Construction Equipment, and the Equipment List submitted according to SC-2.03 and SC-2.05, and as follows:

1. for working equipment, the hourly rate shall be the monthly rental rate divided by 176 hours per month plus the hourly operating cost.
2. for equipment on standby, the hourly rate shall be 50% of the monthly rental rate divided by 176 hours per month, and the hourly operating cost shall not be applied.
3. for specialized equipment rented for a short duration used for change order work or additional work not part of the scope of work bid, the equipment rental rates will be negotiated prior to the work being performed.

SC-13.03 Unit Price Work

SC 13.03.E Delete Paragraph 13.03.E in its entirety and insert the following in its place:

E. The unit price of an item of Unit Price Work shall be subject to reevaluation and adjustment under the following conditions:

1. if the extended price of a particular item of Unit Price Work amounts to twenty-five percent (25%) or more of the Contract Price (based on estimated quantities at the time of Contract formation) and the variation in the quantity of that particular item of Unit Price Work actually furnished or performed by Contractor differs by more than thirty percent (30%) from the estimated quantity of such item indicated in the Agreement; and

2. if there is no corresponding adjustment with respect to any other item of Work; and

3. if Contractor believes that Contractor has incurred additional expense as a result thereof, Contractor may submit a Change Proposal, or if Owner believes that the quantity variation entitles Owner to an adjustment in the unit price, Owner may make a Claim, seeking an adjustment in the Contract Price.

ARTICLE 15 – PAYMENTS TO CONTRACTOR; SET-OFFS; COMPLETION; CORRECTION PERIOD

SC-15.01 Progress Payments

SC-15.01.B.1 Add the following new paragraph at the end of Paragraph 15.01.B.1:

Reflect Change Orders approved as of the date of the Application in each Application for Payment.

For stored materials and equipment, provide clear descriptions of the materials and equipment, the relation of materials and equipment to individual bid items, and the dollar values of materials and equipment stored and in place. The amount allowed for materials and equipment in storage shall not exceed the value of material remaining to be installed less the value of installation. Progress payments for stored materials and equipment to Contractor will not include any overhead or profit.

SC-15.01.B.3 Add the following new paragraphs at the end of Paragraph 15.01.B.3:

Retainage may be used by the Owner to offset costs for any of the losses enumerated in Paragraphs 15.01.C.6.a through 15.01.C.6.e inclusive, 15.01.E.1.a through 15.01.E.1.l inclusive, or 16.02.E. In addition, retainage may be used by the Owner to protect against loss from failure by the Contractor to complete necessary work and to offset any liquidated damages due Owner.

SC-15.01.B.4 Add the following new paragraphs after Paragraph 15.01.B.3:

4. Each application for progress payment shall be accompanied by Contractor's updated progress schedule, shop drawing schedule, procurement schedule, and other data specified herein or reasonably required by Owner or Engineer. The Owner reserves the right to require submission of monthly certified payrolls by the Contractor.

SC-15.01.D.1 Delete Paragraph 15.01.D.1 in its entirety and insert the following in its place:

1. The Owner will, upon presentation of the Contractor's Application for Payment with Engineer's recommendation, review and act upon said payment request once each month on or about the day of each month stipulated by the Owner at the preconstruction conference. Payment will become due when Owner approves the application for payment and when due, will be paid by Owner to Contractor.

SC-15.01.E.4 Add the following new paragraph after 15.01.E.3:

Items entitling Owner to retain off-sets for engineering costs shall be charged to the Contractor at the Engineer's (Owner's representative or other hired consultant's) rate for labor plus expenses. In addition to those listed above, more specifically for:

a. Submittal reviews that are excessive, that is, more than two reviews by Engineer for the same submittal.

b. Evaluation of proposed substitutes and making changes to Contract Documents occasioned thereby.

c. Overtime worked by Contractor that necessitates Engineer or Owner's representative to work extraordinary overtime which is greater than 50 hours per week, weekend work, or work on holidays.

d. Contract delays as cause by Contractor to meet Substantial and Final Complete times.

e. Oversight and inspection of all defective Work or tests that have not be setup correctly, failed, or otherwise requiring Engineer or come back a second time for oversight or inspection of the same Work.

SC-15.02 Contractor's Warranty of Title

SC-15.02.B Add the following new paragraph immediately after Paragraph 15.02.A:

B. Neither recommendation of any progress payment by Engineer nor payment by the Owner to Contractor, nor any use or occupancy of the Work or any part thereof will release the Contractor from complying with the Contract Documents. Specifically, the Contractor shall maintain in accordance with Article 6, property insurance on all Work, materials, and equipment whether incorporated in the project or not and whether included in an application for payment or not, for the full insurable value thereof. Passing title to Owner for materials and equipment included in an application for payment does not relieve the Contractor of the Contractor's obligation to provide insurance (including property insurance) as required in Article 6 of the General Conditions and these Supplementary Conditions. All insurance shall remain in effect as provided in Article 6.

SC-15.04 Partial Use or Occupancy

SC-15.04 Add the following new paragraph immediately after Paragraph 15.04.A.4:

B. Owner has the right to take possession of or use any completed or substantially completed portions of the work at any time, but such taking possession or use will not be deemed an acceptance of any work not completed in accordance with the Contract Documents. Owner's use of any facilities so identified in the Contract Documents will not be grounds for extension of the contract time or change in the contract price. Owner's use of any facilities not specifically identified in the Contract Documents will be in accordance with conditions agreed to prior to such use, and any extra costs or delays in completion incurred and properly claimed by Contractor will be equitably adjusted with a Change Order. Facilities substantially completed in accordance with the Contract Documents which are occupied or used by Owner prior to substantial completion of the entire work will be done in accordance with General Conditions 15.03. Guarantee periods for accepted or substantially completed work including mechanical and electrical equipment will commence upon the start of continuous use by Owner. All tests and instruction of Owner's personnel must be satisfactorily completed, and Owner shall assume responsibility for and operation of all facilities occupied or used except as may arise through portions of work not yet completed by Contractor If the work has been substantially completed and the Engineer certifies that full completion thereof is materially delayed through no fault of the Contractor, the Owner shall, without terminating the Agreement, make payment of the balance due for the portion of the work fully completed and accepted.

SC-15.05 Final Inspection

SC-15.05 Add the following new paragraph immediately after Paragraph 15.05.A:

B. After Contractor has remedied all deficiencies to the satisfaction of the Engineer and delivered all construction records, maintenance and operating instructions, schedules, guarantees, bonds, certificates of inspection, and other documents (all as required by the Contract Documents), Owner and Contractor shall be promptly notified in writing by Engineer that the work is acceptable.

SC-15.06 Final Payment

SC-15.06.A.4 Add the following new paragraph immediately after Paragraph 15.06.A.3:

On contracts for public works, Final Payment of retained percentage will not be made until after Contractor has filed with Owner the affidavit required by RCW 39.12.040 certifying Contractor and its Subcontractors have paid not less than the prevailing rate of wages.

SC-15.06 Final Payment

SC-15.06.B.2 Add the following new paragraph immediately after Paragraph 15.06.B.1:

Upon receipt of (i) Engineer's recommendation of payment with Contractor's Final Application for Payment and accompanying documentation, and (ii) Engineer's written notice that the Work is acceptable subject to the provisions herein, Owner will notify the Department of Revenue of the completion of Work under these Contract Documents. Provided the Department of Revenue certifies there are no taxes or penalties due and owing from Contractor, and there are no other known Claims or Liens against the retained funds, Owner will make payment to Contractor in accordance with provisions herein and RCW 60.28.010. In the event that unsatisfied Claims, Liens for taxes, material, labor, and other services are known to exist, an amount will be further withheld from the retainage sufficient to satisfy the settlement of such Claims and Liens, including attorney's fees incurred, and remainder will be released from escrow, or released from retained funds and paid to Owner.

ARTICLE 17 – FINAL RESOLUTION OF DISPUTES

SC-17.02 Add Paragraph 17.02:

SC-17.02 Arbitration

A. All matters subject to final resolution under this Article will be decided by arbitration. This agreement to arbitrate and any other agreement or consent to arbitrate entered into will be specifically enforceable under the prevailing law of any court having jurisdiction.

B. The demand for arbitration will be filed in writing with the other party to the Contract and with the selected arbitrator or arbitration provider, and a copy will be sent to Engineer for information. The demand for arbitration will be made within the specific time required in this Article, or if no specified time is applicable within a reasonable time after the matter in question has arisen, and in no event shall any such demand be made after the date when institution of legal or equitable proceedings based on such matter in question would be barred by the applicable statute of limitations. The demand for arbitration should include specific reference to Paragraph SC-17.02.D below.

C. No arbitration arising out of or relating to the Contract shall include by consolidation, joinder, or in any other manner any other individual or entity (including Engineer, and Engineer's consultants and the officers, directors, partners, agents, employees or consultants of any of them) who is not a party to this Contract unless:

1. the inclusion of such other individual or entity is necessary if complete relief is to be afforded among those who are already parties to the arbitration; and
2. such other individual or entity is substantially involved in a question of law or fact which is common to those who are already parties to the arbitration and which will arise in such proceedings.

D. The award rendered by the arbitrator(s) shall be consistent with the agreement of the parties, in writing, and include a concise breakdown of the award, and a written explanation of the award specifically citing the Contract provisions deemed applicable and relied on in making the award.

E. The award will be final. Judgment may be entered upon it in any court having jurisdiction thereof, and it will not be subject to modification or appeal, subject to provisions of the Laws and Regulations relating to vacating or modifying an arbitral award.

F. The fees and expenses of the arbitrators and any arbitration service shall be shared equally by Owner and Contractor.

END OF SECTION

Reg. No. _____

Date: _____

STATEMENT OF INTENT TO PAY PREVAILING WAGE ON PUBLIC WORKS CONTRACT

Awarding Agency_____

Contract Number _____

Date Contract Awarded _____

Date Work Commencing _____

County in Which Work Performed_____

State of Washington Location Within County _____

County of Whitman Prime Contractor_____

Do you intent to use Subcontractors? _____

In compliance with RCW 39.12.040 I, the undersigned, being duly authorized representative of

_____

Contractor or Subcontractor Address

do hereby certify that the following rates of hourly wage and hourly fringe benefits will be paid to all laborers, workmen, and mechanics employed by me upon the public works project described above and that no laborer, workman, or mechanic will be paid less than the "Prevailing Rate of Wage" as determined by the Industrial Statistician of the Department of Labor and Industries.

CRAFT AND CLASSIFICATION OF LABOR	Rate of Hourly Pay	Rate of Hourly Fringe Benefits

NOTE: Attached additional sheets as needed.

_____ This _____day of _____, 20_____

By_____ _____

Authorized Representative Notary Public in and for the State of Washington

The purpose of this statement is to provide evidence of intent to comply with the prevailing wage requirements of Chapter 39.12 RCW IT IS PRELIMINARY FILING ONLY and cannot be construed as application for certification by the Director of Labor and Industries that the prevailing wage requirements as set forth in RCW 39.12.040 have been satisfied.

This space is for Director's Approval

APPROVED: Department of Labor and Industries Statistician

By: _____ Date: _____

BEFORE FINAL SETTLEMENT CAN BE MADE in connection with any public works project, it will be necessary for the Contractor and any subcontractor to produce evidence of certification by the Director that prevailing wages, including fringe benefits, have been paid to each classification of laborers, workmen, or mechanics employed on said project. Form S.F. 9843, "Affidavit of Wages Paid," or a similarly constructed form, should be submitted for the Director's Certification. These forms are available upon request from any office of the Department of Labor and Industries.

PROGRAM PAYMENTS: Each voucher claim submitted to an Owner by a Contractor for Payment on a project estimate shall state that prevailing wages have been paid in accordance with the pre-filed statement of intent to pay prevailing wages on file with the public agency.

COMPLETE AND MAIL ENTIRE SET FOR APPROVAL TO:

Industrial Relations Division, Department of Labor and Industries, General Administration Building, Olympia, Washington 98504.

END OF SECTION

AFFIDAVIT OF WAGES PAID ON PUBLIC WORKS CONTRACT

Awarding Agency_____

Contract Number _____

Date Contract Awarded _____

Date Contract Completed _____

County in Which Work Performed_____

State of Washington Location Within County _____

County of Whitman Was a Statement of Intent Filed?_____

In compliance with RCW 39.12.040 I, the undersigned, being duly authorized representative of

_____

Contractor or Subcontractor Address

do hereby certify that the following rates of hourly wage and hourly fringe benefits have been paid to all laborers, workmen, and mechanics employed by me upon the public works project described above and that no laborer, workman, or mechanic has been paid less than the "Prevailing Rate of Wage" as determined by the Industrial Statistician of the Department of Labor and Industries.

List below each classification of labor employed by you upon the project described above and the hourly pay and hourly fringe benefits paid to each classification. If apprentices have been employed, their names and/or registration numbers, their stages of progression, the rate of hourly pay, and the rate of hourly fringe benefits paid to each apprentice.

CRAFT AND CLASSIFICATION OF LABOR	Rate of Hourly Pay	Rate of Hourly Fringe Benefits

NOTE: Attached additional sheets as needed.

_____

Company Name Subscribed and sworn to me

By_____ This _____day of _____, 20_____

_____

Notary Public in and for the State of Washington

END OF SECTION

PART 3

TECHNICAL SPECIFICATIONS

DIVISION 1

GENERAL REQUIREMENTS

SECTION 01035

AMENDING AND SUPPLEMENTING CONTRACT DOCUMENTS

PART 1 GENERAL

1.1 GENERAL

A. Refer to the Standard Contract Conditions and Supplementary Conditions for the Project. Information included herein for amending and supplementing the Contract Documents is provided to assist with general processes and procedures. If in conflict with the Contract Conditions, the Contract Conditions shall be followed.

1.2 FIELD ORDERS

A. Field orders are written orders prepared by the Engineer which requires minor changes to the Work but does not change the Contract Price or Times.

B. Procedure:
1. Engineer will issue Field Orders (with Owner approval) to Contractor, transmitted by email.
2. Effective date of the Field Order shall be the date of signature by Engineer, unless otherwise indicated thereon.
3. Contractor shall acknowledge receipt by signing and returning to Engineer by email within 2 business days.

1.3 REQUEST FOR QUOTATION

A. Engineer and Owner may, in anticipation of ordering an addition, deletion, or revision to the Work, request Contractor to prepare a quotation of cost and times to perform contemplated Work change(s).

B. The Request for Quotation (RFQ) will be issued by the Engineer to the Contractor and will include reference number for tracking purposes and detailed description of the proposed change, and such additional information as appropriate and as may be required for Contractor to accurately estimate cost and time impact on Project.

C. Contractor's written quotation shall be transmitted to Engineer promptly, but not later than 5 calendar days after Contractor's receipt of request. Proposal shall remain firm and in full effect for a minimum period of 30 calendar days after receipt by Engineer.

D. RFQ is for information only; Contractor is neither authorized to execute proposed change nor to stop Work in progress as result of such request.

E. Owner may amend the RFQ based on the Contractor's response and negotiate cost and schedule changes with Contractor, requiring subsequent revision(s) to the Contractor's quote.

F. Owner may or may not order the work to be done. If decided to be acted on, a Work Change Directive (with eventual Change Order) or a Change Order will be issued for Contractor to perform such Work.

1.4 WORK CHANGE DIRECTIVES

A. A Work Change Directive (WCD) will be used to order revisions to the Contract which are expected to result in changes in the contract price, the contract time, or both. Cost and schedule changes associated with a WCD shall be incorporated into a subsequent Contract Change Order. WCDs bearing the Owner's signature will be transmitted as an electronic document via email to the Contractor's Project Manager.

B. Procedure: See flow chart below.

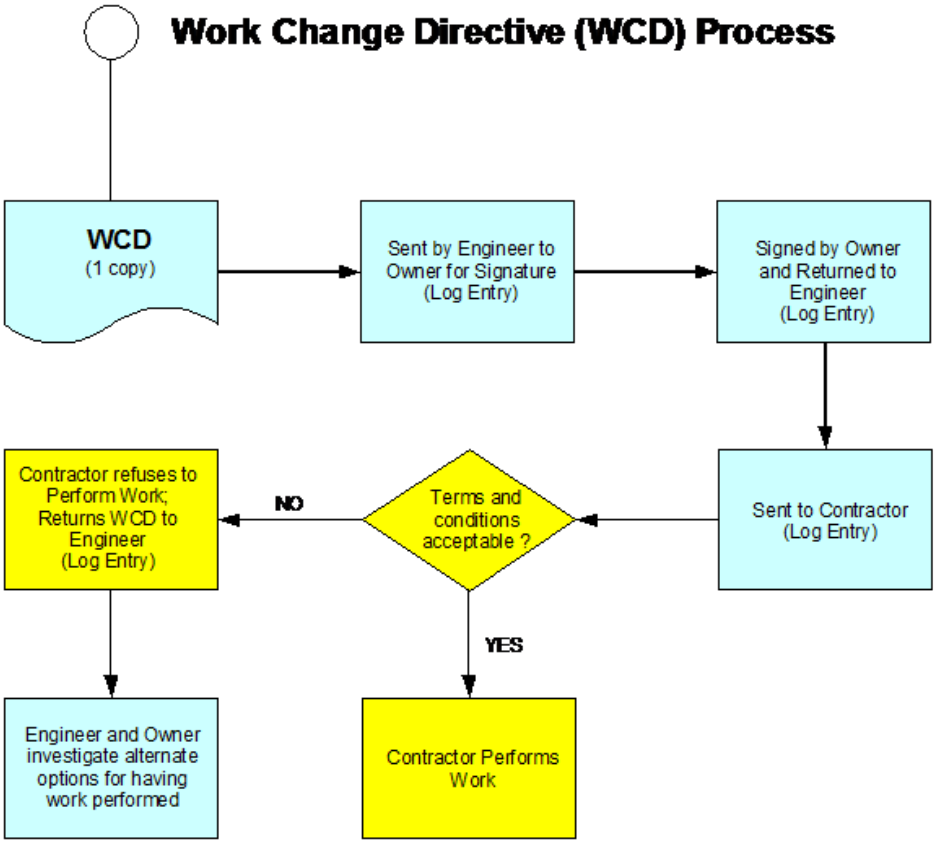

1.5 CHANGE ORDERS

A. Change Orders are a document that is signed by Owner and Contractor and authorizes addition, deletion, or revision in the Work or an adjustment in the Contract Price or Times, or other revisions to the Contract, issues on or after the Effective Date of the Contract.

B. Procedure:

1. Engineer will prepare an electronic copy of proposed Change Order and transmit such with Engineer's written recommendation and request to Contractor for signature.
2. Contractor shall, upon receipt, either: (i) promptly sign and return an electronic copy to Engineer for Owner's signature, or (ii) return unsigned electronic copy with written justification for not executing Change Order.
3. Engineer will, upon receipt of Contractor signed copy, promptly forward Engineer's written recommendation and partially executed copy for Owner's signature, or if Contractor fails to execute the Change Order, Engineer will promptly so notify Owner and transmit Contractor's justification to Owner.
4. Upon receipt of Contractor-executed Change Order, Owner will promptly either:
    a. Execute Change Order, and return an electronic copy to Engineer, or
    b. Return to Engineer unsigned copy with written justification for not executing Change Order.
5. Upon receipt of Owner-executed Change Order, Engineer will transmit an electronic copy to Contractor, or if Owner fails to execute the Change Order, Engineer will promptly so notify Contractor and transmit Owner's justification to Contractor.
6. Upon receipt of Owner-executed Change Order, Contractor shall:
    a. Perform Work covered by Change Order.
    b. Revise Schedule of Values to adjust Contract Price and submit with next Application for Payment.
    c. All items on the Approved Change Orders shall be incorporated into the schedule as separate activities prior to the subsequent schedule update. These activities shall be cost loaded in accordance to the "Schedule of Values."
    d. Revise progress schedule to reflect changes in Contract Times, if any, and to adjust times for other items of Work affected by change.
    e. Successors and Predecessors for activities in the Approved Change Orders shall also be identified and logic ties established accordingly in the schedule.
    f. Enter changes in Project record documents after completion of change related Work.

C. In signing a Change Order, Owner and Contractor acknowledge and agree that:
1. Stipulated compensation (Contract Price or Contract Times, or both) set forth includes payment for (i) the Cost of the Work covered by the Change Order or Written Amendment, (ii) Contractor's fee for overhead and profit, (iii) interruption of progress schedule, (iv) delay and impact, including cumulative impact, on other Work under the Contract Documents, and (v) extended overheads.
2. Change Order or Written Amendment constitutes full mutual accord and satisfaction for the change to the Work;
3. Unless otherwise stated in the Change Order or Written Amendment, all requirements of the original Contract Documents apply to the Work covered by the Change Order or Written Amendment.

1.6 CHANGE PROPOSAL

A. A written request by Contractor seeking an adjustment in Contract Price, Times, or both contesting an initial decision by Engineer concerning the requirements of the Contract Documents or the acceptability of Work under the Contract Documents, and challenging a setoff against payments due, or seeking relief with respect to the terms of the Contract.

B. Contractor shall submit any Change Proposal seeking adjustment in Contract Price, Times or both within 30 calendar days of commencement of such event that causes the delay, interruption, or interference.

1.7 CLAIMS

A. Claims are demands or assertions by Owner or Contractor seeking an adjustment of Contract Price or Times, or both contesting an initial decision by Engineer concerning the requirements of the Contract Documents or the acceptability of Work under the Contract Documents.

B. Include, at a minimum:

1. Specific references including (i) Drawing numbers, (ii) Specification section and article/paragraph number, and (iii) Submittal type, Submittal number, date reviewed, Engineer's comment, as applicable, with appropriate attachments.
2. If the Contractor considers that any direction of the Owner constitutes a change in the scope of works or is not permitted under this contract, or that the Owner has asserted a right of withholding or set-off not authorized under this contract, or is otherwise in breach of this contract (a "breach"), then the Contractor shall give the Owner notice thereof, with reasonable particulars, promptly, but in any event within fifteen (15) days after first becoming aware of the change or the breach. If the Contractor does not give notice within that time, the Contractor is deemed to irrevocably have waived any right to make any Claim against the Owner in respect of the change or the breach.
3. Stipulated facts and pertinent documents, including photographs and statements.
4. Interpretations relied upon.
5. Description of (i) nature and extent of claim, (ii) who or what caused the situation, (iii) impact to the Work and work of others, and (iv) discussion of claimant's justification for requesting a change to price or times or both.
6. Estimated adjustment in price claimant believes it is entitled to with full documentation and justification.
7. Requested Change in Contract Times: Include at least (i) progress schedule documentation showing logic diagram for request, (ii) documentation that float times available for Work have been used, and (iii) revised activity logic with durations including sub-network logic revisions, duration changes, and other interrelated schedule impacts, as appropriate.
8. Documentation as may be necessary as set forth below for Work Change Directive, and as Engineer may otherwise require.

PART 2 PRODUCTS (NOT USED)

PART 3 EXECUTION (NOT USED)

END OF SECTION

SECTION 01040

PROJECT COORDINATION

PART 1 - GENERAL

1.1 SUMMARY

A. This Section includes the required coordination between the Contractor, Owner, and the Owner's contractors.

1.2 SUBMITTALS

A. Informational:
1. Coordination work plan.

1.3 UTILITY NOTIFICATION AND COORDINATION

A. Coordinate the Work with utility companies and Owner. Notify applicable utilities prior to commencing Work, if damage occurs, or if conflicts or emergencies arise during Work.

1.4 FACILITY OPERATIONS

A. Continuous operation of Owner's facilities is of critical importance. Schedule and conduct activities to enable existing facilities and other construction work to operate continuously, unless otherwise specified. In the event of conflict between construction activities and facility operations and other construction, facility operations and other construction have priority unless otherwise specified.

B. Perform Work continuously during critical connections and changeovers, and as required to prevent interruption of Owner's operations.

C. When necessary, plan, design, and provide various temporary services, utilities, connections, access, and similar items to maintain continuous operations of Owner's facility.

D. Do not close lines, open or close valves, or take other action which would affect the operation of existing systems, except as specifically required by the Contract Documents and after authorization by the Owner. Such authorization will be considered within 48 hours after receipt of Contractor's written request.

E. Install and maintain bypass facilities and temporary connections required to keep Owner's facility operations online. Sequences other than those specified will be considered upon written request to Owner, provided they afford equivalent continuity of operations.

F. Do not proceed with Work affecting a facility's operation without obtaining Owner's advance approval of the need for, and duration of, such Work.

G. Relocation of Existing Facilities:
   1. If required, provide complete relocation of existing structures and underground facilities, including any piping, utilities, equipment, structures, electrical conduit wiring, electrical duct bank, and other necessary items.
   2. Use only new materials for relocated facility. Match materials of existing facility, unless otherwise shown or specified.
   3. Perform relocations to minimize downtime of existing facilities.
   4. Install new portions of existing facilities in their relocated position prior to removal of existing facilities, unless otherwise accepted by Engineer.

1.5 ADJACENT FACILITIES AND PROPERTIES

A. Examination:
   1. After Effective Date of the Agreement but before Work at site commences, Contractor, Engineer, and Owner shall make a thorough examination of pre-existing site conditions including existing buildings, structures, and other improvements in vicinity of the site Work, as applicable, which could be damaged by construction operations.
   2. Periodic reexamination shall be performed by the Contractor to include, but not limited to, cracks in structures, settlement, leakage, and similar conditions.

B. Documentation:
   1. Record and submit documentation of observations made on examination inspections in accordance with Article CONSTRUCTION PHOTOGRAPHS.

1.6 CONSTRUCTION PHOTOGRAPHS

A. The Contractor shall photographically document all phases of the project Work including preconstruction, construction progress, and post-construction.

B. Preconstruction and Post-construction:
   1. After Effective Date of the Agreement, but before Work at the site commences, and again upon issuance of Substantial Completion, take a minimum of 10 pictures of the construction site and area adjacent to perimeter of construction site.
   2. At least weekly, provide 10 pictures of the construction site and area adjacent to perimeter of the construction site to document construction progress.
   3. Format: Digital, minimum resolution of 756 by 504 pixels and 24 bit, millions of color.

C. Digital Images:
   1. Archive using a commercially available photograph management system.
   2. Label each storage media with Project and Owner's name, and week and year images were produced.

1.7 REFERENCE POINTS AND SURVEYS

A. Owner's Responsibilities:
   1. Provide benchmarks convenient to Work.

B. Location and elevation of benchmark(s) are shown on Drawings.

C. Contractor's Responsibilities:
   1. Provide additional survey and controls required to layout the Work.
   2. Check and establish exact location of existing facilities prior to construction of new facilities and any connections thereto.
   3. In event of discrepancy in data provided by Owner, request clarification before proceeding with Work.
   4. Retain professional land surveyor registered in Province of British Columbia who shall perform or supervise engineering surveying necessary for additional construction staking and layout.
   5. Maintain complete accurate log of survey Work as it progresses as a Record Document.
   6. Provide competent employee(s), tools, total station equipment, stakes, and other equipment and materials to:
      a. Establish control points, lines, and layout stakes.
      b. Check layout, survey, and measurement.
      c. Measure quantities for payment purposes.
      d. Be available at all times.

PART 2 PRODUCTS (NOT USED)

PART 3 EXECUTION (NOT USED)

3.1 SALVAGE OF MATERIALS

A. Refer to Section 02232, Site Preparation.

3.2 CUTTING, FITTING, AND PATCHING

A. Cut, fit, adjust, or patch Work and work of others, including excavation and backfill as required, to make Work complete.

B. Obtain prior written authorization of Owner before commencing Work to cut or otherwise alter existing facilities.

C. Refinish surfaces to provide an even finish.

D. Restore existing work, underground facilities, and surfaces that are to remain in completed Work.

E. Make restorations with new materials and appropriate methods as specified for new Work of similar nature; if not specified, use recommended practice of manufacturer or appropriate trade association.

F. Fit Work airtight to pipes, sleeves, and other penetrations through surfaces and fill voids.

G. Remove specimens of installed Work for testing when requested by Owner.

END OF SECTION

SECTION 01100

SUMMARY OF WORK

PART 1 - GENERAL

1.1 WORK COVERED BY CONTRACT DOCUMENTS

A. The completed Work will provide Owner with contact water tanks, lift station and associated appurtenances, a lined concrete basin, a new building drain and lift station, and a fire suppression water holding tank with pump and appurtenances at the Whitman County Carothers Road Solid Waste Facility.

B. Owner will perform site preparation and demolition in advance of the Contractor's Work. This includes demolition of the lined impoundment, decant facility, and appurtenances. Owner will prepare the earthen pad of the former lined impoundment floor as subgrade and install the underdrain system at the former lined impoundment. Contractor will be required to prepare the structural subgrade for the contact water tanks, lift station, and lined evaporation basin. Owner will excavate and prepare the earthen pad for the fire suppression water tank for Contractor's Work.

C. Contractor shall coordinate with Owner's electrician for site electrical work provided by Owner.

D. Refer to Attachment B for the Geotechnical Summary of Findings and Recommendation Letter.

E. The descriptions of Bid Items included herein are for general reference and do not necessarily name ALL incidental items required to complete the Work. The cost of all such incidentals shall be included in the various related items of Work and included in the Bid Form. It is the Contractor's responsibility to include all Work as shown and described in the Contract Documents.

F. The Work is broken down into the following items (in coordination with Section 00400, Bid Form and Section 01275, Measurement and Payment):

Item ID	Description	Summary of Work
LS-1	General Conditions	This Bid Item covers all General Condition items of the Project, including but not limited to bonds, insurance, permits, Contractor's quality control, surveying, submittals, project administration, contract closeout, and all other Work and administrative services to complete this Bid Item. In addition, this item includes all the Contractor's and its subcontractor's and supplier's coordination with the Owner and Engineer for implementing Construction Quality Assurance (CQA) on the project in accordance with the CQA Plan – See Attachment A to the Contract Documents.
LS-2	Temporary Facilities and Controls	This Bid Item covers all Work for Temporary Facilities and Controls, including but not limited to mobilization, demobilization, setup, and maintenance of all temporary facilities and associated utilities, temporary and

		erosion control systems, safety systems, and all other Work to complete this Bid Item.
LS-3	Site Preparation	This Bid Item covers all Work for readying the Site for construction, including site clearing and cleanup, subgrade compaction confirmation, general layout and staking, material stockpiling, demolition activities, utility locates and clearances, coordination with Owner's electrician, removal and salvage (for reuse) of existing contact water pressure line, abandoning/removing the existing building drain line, and all other Work to complete this Bid Item.
LS-4	General Site/Yard Work	This Bid Item covers all Work for the general site/yard not already included in other Bid Items, including layout and control staking, excavation, material segregation, material stockpiling, haul off and stockpiling of surplus and/or unsuitable materials, fill and backfill, compaction, testing, subgrade preparation, gravel surfacing placement, geotextile, restoring ditches, installing new ditches, permanent soil stabilization, bollards, catch basin, traffic control and protection, retrofit and connection of the building drain cleanout and tie-ins, and all other Work to complete this Bid Item. Topsoil material and general backfill material is available onsite for the Contractor to use. Crushed Surfacing Top Course material for surfacing of the drive areas and re-grading of yard areas will be Owner-supplied. Contractor shall assume material to be stockpiled near the work area for Contractor's use and placement.
LS-5	Contact Water Tanks	This Bid Item covers all Work for installation of two 10,000-gallon contact water tanks, including but not limited to layout and control staking, excavation, subgrade preparation, structural base, specialty tank backfill, general fill and backfill, compaction, testing, material import, ballast/dead-man system, connections to inlets and drain lines, vent piping, instrumentation and controls, monitoring systems, panels, mounting, coordination with the Owner's electrician for power supply and connection, system testing and certification, system start-up and training, and all other Work to complete this Bid Item. Shotrock and Crushed Surfacing Top Course Material for preparing the base for the tanks will be Owner-supplied. Contractor shall assume material to be stockpiled near the work area for Contractor's use and placement.
LS-6	Contact Water Lift Station	This Bid Item covers all Work for the installation of the contact water lift station, including but not limited to the layout and control staking, excavation, subgrade preparation, structural base, ballast/dead-man system, general fill and backfill, compaction, testing, material import, pump station assembly, pumps, piping, fittings and appurtenances, instrumentation and controls, panels, mounting, surface completions, coordination with the Owner's electrician for power supply and connection, connection to inlet and outlet piping, system testing and certifications, system start-up and training, and all other Work to complete this Bid Item. Included as part of this Bid Item is the stainless steel pressure piping, valves and fittings from the lift station to the truck fill station, insulation, enclosure and appurtenances, and the portable/removable hose and fitting. Crushed Surfacing Top Course Material for preparing the base for the lift station will be

		Owner-supplied. Contractor shall assume material to be stockpiled near the work area for Contractor's use and placement.
LS-7	Lined Concrete Evaporation Basin	This Bid Item covers all Work related to the construction of the lined concrete evaporation basin, including but not limited to layout and control staking, excavation, general backfill, subgrade preparation, structural base, compaction, testing, concrete and rebar, concrete embedment liner, curbing, safety railing and gate, cover system, testing (all materials, liner and leakage testing), and all other Work to complete this Bid Item. Shotrock and Crushed Surfacing Top Course Material for preparing the structural base for the basin will be Owner-supplied. Contractor shall assume material to be stockpiled near the work area for Contractor's use and placement.
LS-8	Building Drain Lift Station	This Bid Item covers all Work for the installation of the building drain lift station, including but not limited to layout and control staking, excavation, subgrade preparation, structural fill, general fill and backfill, compaction, testing, material import, pump station assembly, pumps, piping, fittings and appurtenances, instrumentation and controls, panels, mounting, surface completion, coordination with the Owner's electrician for power supply and connection, connection to inlet and outlet piping, system testing and certifications, system start-up and training, and all other Work to complete this Bid Item. Crushed Surfacing Top Course Material for preparing the base for the lift station will be Owner-supplied. Contractor shall assume material to be stockpiled near the work area for Contractor's use and placement.
LS-9	Fire Suppression Water Holding Tank	This Bid Item covers all Work for installation of one 15,000-gallon fire suppression water holding tank, including but not limited to layout and control staking, excavation, subgrade preparation, structural, ballast/deadman system, specialty tank backfill, general backfill, compaction, testing, connection to the fill line pipe, vent piping, lift station, instrumentation and controls, panels, mounting, waterline line (fill line) extension, skid, system testing and certification, coordination with the Owner's electrician for power supply and connection, system start-up and training, and all other Work to complete this Bid Item. Included is the disinfection of the potable water line and coordination with the health district, if testing is required. Shotrock and Crushed Surfacing Top Course Material for preparing the base for the tanks will be Owner-supplied. Contractor shall assume material to be stockpiled near the work area for Contractor's use and placement.
LS-10	Yard Piping and Valves	This Bid Item covers all Work for yard piping and valves, including but not limited to layout and control staking, excavation, trenching, backfill, trench stabilization, fittings and appurtenances, testing, connections to lift stations, cleanouts, compaction, testing, reuse of salvaged contact water pressure line, and all other Work to complete this Bid Item. Crushed Surfacing Top Course Material for the pipe zone of the pipe trenches will be Owner-supplied. Contractor shall assume material to be stockpiled near the work area for Contractor's use and placement.

PART 2 - PRODUCTS (NOT USED)

PART 3 - EXECUTION (NOT USED)

END OF SECTION

SECTION 01275

MEASUREMENT AND PAYMENT

PART 1 - GENERAL

1.1 SUMMARY

A. This Section includes administrative and procedural requirements for measurement and payment. Cross reference Section 00400, BID FORM and Section 01100, SUMMARY OF WORK.

1.2 SUBMITTALS

A. Informational Submittals:

1. Schedule of Values – Submit on Contractor's standard form as approved by Engineer.
2. Schedule of Estimated Progress Payments:
   a) Submit with initially accepted Schedule of Values
   b) Submit adjustments thereto with Application for Payment.
3. Application for Payment
4. Final Payment Application with Lien Releases.
5. Washington Professional Licensed Surveyor No. and Qualifications.

1.3 SCHEDULE OF VALUES

A. Prepare a separate Schedule of Values for each schedule of Work under the Agreement, if applicable.

B. Upon request by Engineer, provide documentation to support the accuracy of the Schedule of Values.

C. Lump Sum Work: List each of the major components of each lump sum bid item separately.

D. An unbalanced or front-end loaded schedule will not be acceptable.

E. Summation of the complete Schedule of Values representing all the Work shall equal the Contract Price.

F. Engineer will determine the actual quantities and classifications of Unit Price Work performed by the Contractor.

1.4 SCHEDULE OF ESTIMATED PROGRESS PAYMENTS

A. Show estimated payment requests throughout the Contract Times aggregating the initial Contract Price.

B. Based estimated progress payments on initially accepted progress schedule. Adjust to reflect subsequent adjustments in progress schedule and Contract Price as reflect by modifications to the Contract Documents.

PART 2 - PRODUCTS (NOT USED)

PART 3 - EXECUTION

3.1 APPLICATION FOR PAYMENT (PAYMENT REQUEST)

A. Use a detailed Application for Payment Form that is suitable to Engineer.

B. Include separate line item for each Change Order executed prior to date of submission. Provide further breakdown of such items as requested by Engineer.

C. Preparation

1. Coordinate with Owner at site to verify/confirm Work completed and materials on-hand.
2. Round values to the nearest whole dollar.
3. Submit Application for Payment listing all materials on-hand, and such supporting data as may be requested by Engineer.

3.2 MEASUREMENT

A. Weighing, measuring, and metering devices used to measure quantity of materials for Work shall be suitable for the purpose intended and conform to tolerances and specifications as specified in National Institute of Standards and Technology, Handbook 44.

B. Whenever pay quantities of material are determined by weight, material shall be weighed on scales furnished by Contractor and certified accurate by state agency responsible. Owner may make their scales available and Owner's discretion for Contractors use. Certified weight or load slips shall be provided and delivered to Owner's representative at point of material delivery.

C. Location and elevation of established controls for survey are shown on the Drawings.

D. Contractor's Responsibilities:

1. Retain a licensed professional surveyor (PLS) registered in the State of Washington who shall perform or supervise all project surveys (before start of construction, progress surveys, and as-built surveys). Surveyor shall produce electronic submittals of finished triangulated surfaces in:
   a) AutoCAD Civil 3D platform. Softdesk or Land Development *.tin files will not be accepted.
   b) In addition, all data points shall be submitted in an Excel spreadsheet or delimited text file formatted with point number, northing, easting, elevation, and description.
   c) Cross-sections will not be accepted.
   d) All submitted survey shall include the ties to construction survey control points as established by the Owner.
   e) The before start of construction and the compiled as-built survey shall also be provided in a signed delivered by the PLS.
2. Provide competent staff, materials, and equipment to perform the survey.
3. Provide additional construction control points as needed to survey the Work. If existing control monuments are destroyed during construction, coordinate with Owner for replacement at Contractor's sole expense.

Provide Engineer with electronic file of all newly added control points and identification markings.

4. Provide survey for measurement and payment of items as listed in the tables herein.
5. Submit progress payments to Engineer for approval before subsequent work is initiated that will alter or cover up the as-built (as-constructed) conditions.
6. General survey point density
   a) Roads/Yard Surface Areas: Survey points on 20-foot grid and 0.25 foot cord height intervals on horizontal curves unless otherwise indicated. Survey super-elevation application stations, horizontal and vertical points on curvature, and points on tangent locations. Survey centerline of roads, shoulder breaklines, edge of base.
   b) Pipelines: Survey along the centerline of pipes on 10-foot intervals and capturing all changes in vertical and horizontal directions, valves, fittings, and entry and exit into utility boxes and manholes/lift stations.
   c) Facilities and Infrastructure: Survey all corners, bends, and other distinct shapes to show the full extent of all facilities.

E. Lump Sum (LS) Items: Unit is one; no specific measurement will be made. Progress payments based on approved Schedule of Values and also may be based on some level of field measurement and/or survey to determine the percentage of Work completed for payment, as approved by the Owner's Representative.

F. PAYMENT

1. Payment for all Lump Sum (LS) work shown or specified in the Contract Documents is included in the Contract Price, and includes all labor, materials, services, and overhead. Payment will be based on a percentage basis of completed Work for each line item as approved in the Schedule of Values, and as agreed by Owner and Engineer.
2. Payment will be made by Owner within the agreed to times as per the Preconstruction Meeting.
3. Payment Schedule:

Item ID*	**Item Description**	**Measurement Method for Payment**
LS-1	General Conditions	Paragraph 3.2.E
LS-2	Temporary Facilities and Controls	Paragraph 3.2.E
LS-3	Site Preparation	Paragraph 3.2.E
LS-4	General Site/Yard Work	Paragraph 3.2.E
LS-5	Contact Water Tanks	Paragraph 3.2.E
LS-6	Contact Water Lift Station	Paragraph 3.2.E
LS-7	Lined Concrete Evaporation Basin	Paragraph 3.2.E
LS-8	Building Drain Lift Station	Paragraph 3.2.E

LS-9	Fire Suppression Water Holding Tank	Paragraph 3.2.E
LS-10	Yard Piping and Valves	Paragraph 3.2.E
*Refer to Section 01100, SUMMARY OF WORK, for a description of Bid Items.		

3.3 NONPAYMENT FOR REJECTED OR UNUSED PRODUCTS

A. Payment will not be made for the following:

1. Loading, hauling, and disposing of rejected materials.
2. Quantities of material wasted or disposed of in a manner not called for under the Contract Documents.
3. Rejected loads of material, including material rejected after is has been placed by reason of failure of Contractor to conform to the provisions of the Contract Documents.
4. Material not unloaded from transporting vehicle.
5. Damaged materials and equipment.
6. Defective Work not accepted by Engineer.
7. Material remaining on-hand after completion of Work.

3.4 PARTIAL PAYMENTS FOR STORED MATERIALS AND EQUIPMENT

A. No partial payments will be made for materials and equipment stored unless submittals for such materials and equipment have been approved and the materials are stored in a safe and protective manner, and insured by the Contractor. Payment will be allowed for pre-purchased items but must comply with the provisions of this Article, as approved by Engineer.

B. Final payment will be made only for products incorporated into the Work. Remaining products for which partial payments have been made shall revert to Contract unless otherwise agreed to and partial payments made for such items will be deducted from final payment.

3.5 PARTIAL PAYMENTS FOR UNDELIVERED MATERIALS AND EQUIPMENT

A. No partial payments will be made for materials and equipment not delivered to the site and incorporated into the Work or stored (see above paragraph).

B. Final payment will be made only for products delivered to the project site and incorporated into the Work.

END OF SECTION

SECTION 01300

SUBMITTALS

PART 1 - GENERAL

1.1 SUMMARY

A. This Section includes administrative and procedural requirements for submitting all submittals, including but not limited to, Shop Drawings, Product Data, Samples, and other miscellaneous submittals as required by the specifications.

B. Additional requirements may be specified in the General Conditions for the Contract.

C. Additional submittal requirements may be specified in the respective technical Specification Sections or on the Drawings.

1.2 DEFINITIONS

A. Action Submittal: Information submitted by Contractor that requires Engineer's responsive action.

B. Informational Submittal: Information submitted by the Contractor that does not require the Engineer's responsive action. Submittals may be rejected for not complying with requirements of the Contract.

1.3 PROCEDURES

A. Complete the Submittal Transmittal Form, to be provided by Engineer, and send Submittals to Engineer at the following address, unless directed otherwise:

Great West Engineering, Inc.
Attn: Travis Pyle, PE
3363 N. Lakeharbor Lane
Boise, Idaho 83703
E-mail: tpyle@greatwesteng.com

B. Electronic Submittals: <u>All submittals shall be provided in electronic format</u>, except for samples. If file size is too large to send via email, a fileshare site will be setup to allow files to be posted.

1. Each submittal shall be an electronic file in Adobe Acrobat Portable Document Format (PDF). Use the latest version of Adobe available at the time of Contract execution for file compatibility.
2. PDF files shall be setup to print legible at 8.5-inches by 11 inches, or 11 inches by 17 inches. No other paper sizes will be accepted.
3. Submit new electronic files for each resubmittal. Clearly identify changes to the resubmittal if reusing original submittal information.

4. The entire electronic submittal mist be provided as one file.
5. Include copy of the Transmittal of Contractor's Submittal form as provided by Engineer.
6. Engineer will reject submittal immediately if it is not electronically submitted, unless it is a sample or otherwise pre-approved to be transmitted otherwise.
7. Submittals will become the possession of the Engineer and Owner and will be distributed as needed. No other permission will be needed from the Contractor or its Subcontractors to distribute and share information.
8. Further procedures for electronic submission will be discussed at the Preconstruction conference.

C. General: Electronic copies of CAD Drawings of the Contract Drawings will not be provided by Engineer for Contractor's use in preparing submittals.

D. Coordination: Coordinate preparation and processing of submittals with performance of construction activities in accordance with the General Conditions.

E. Submittals Schedule: Submit per the General Conditions

F. Direct Transmittal from Contractor: Engineer will not accept submittals from anyone but the Contractor.

G. Processing Time: Allow enough time for submittal review, including time for resubmittals, as follows. Time for review shall commence on Engineer's receipt of submittal.
1. Initial Review: Allow 14 calendar days for initial review of each submittal. Allow additional time if processing must be delayed to permit coordination with subsequent submittals. Engineer will advise Contractor when a submittal being processed must be delayed for coordination.
2. Allow 10 calendar days for processing each resubmittal.
3. No extension of the Contract Time will be authorized because of failure to transmit submittals enough in advance of the Work to permit processing.

H. Contractor's Responsibilities
1. All submittals shall be clearly identified as follows:
   a. Date of Submission
   b. Contract Number
   c. Submittal Number
   d. Project Name
   e. Contractor Identification
      1) Contractor
      2) Supplier
      3) Manufacturer
      4) Manufacturer or supplier representative
   f. Identification of Product
   g. Reference to Contract Drawing
   h. Reference to Specification Number, Page, and Paragraph
   i. Reference to applicable standards, such as AWWA, ASTM, ASHTO, etc
   j. Indication of Contractor's approval
   k. Contractor's Certification statement

l. Identification of deviations or variances from the Contract Documents, if any
m. Reference to previous submittal (for resubmittals)
n. Made in America (when required by the Contract Documents)

2. Submittals shall be clear and legible, and of sufficient size for legibility and clarity of the presented data
3. Submittal Log. Maintain a log of all submittals. The submittal log shall be kept accurate and up to date. Provide the submittal log to the Engineer, if requested by the Owner or Engineer. This log should include the following items (as applicable):
   a. Description
   b. Submittal Number
   c. Date transmitted to the Engineer
   d. Date returned to Contractor (from Engineer)
   e. Status of Submittal (Reviewed/Reviewed and Noted/etc)
   f. Date of Resubmittal to Engineer and Return from Engineer (if applicable and repeat as necessary)
   g. Distribution to subcontractors, suppliers, fabricators, installers, authorities having jurisdiction, and others as required.
   h. Date material released for fabrication
   i. Projected (or actual) delivery date
4. Numbering System: Utilize the following submittal identification numbering system:
   a. The first five digits shall be the applicable Specification Section Number.
   b. The digits shall be the sequential number of each separate item or drawing submitted under each Specification Section, in the chronological order submitted, starting at 1.
   c. The last character shall be the letter, if a resubmittal is required, starting with A and continuing with sequential alphabetic naming. A typical submittal number would be as follows:
      a) 03300-3B
      b) 03300 = Specification section for Concrete.
      c) 3 = the third different submittal under this Section.
      d) B = the third submission (second resubmission) of that particular submittal.
5. Variances
   a. Notify the Engineer in writing, at the time of submittal, of any variations or deviations in the submittals from the requirements of the Contract Documents per the General Conditions.
   b. Notify the Engineer in writing, at the time of re-submittal (resubmission), of all variations or deviations from previous submission of that particular shop drawing, except those deviations which are the specific result of prior comments from the Engineer.
6. Contractor's Certification
   a. Each submittal shall have affixed to it the following Certification Statement:
      1) "Certification Statement: by this submittal, I hereby represent that I have determined and verified all field measurements, field construction criteria, materials, dimensions, catalog numbers, and similar data and I have checked and coordinated each item

with other applicable approved shop drawings and all required Contract requirements."

b. Each submittal shall bear the above Certification Statement on the cover sheet.

c. Each certification statement shall be signed and dated by the individual that reviewed and approved the information prior to submitting the documents to the Engineer.

I. Distribution: Furnish copies of final submittals to manufacturers, subcontractors, suppliers, fabricators, installers, authorities having jurisdiction, and others as necessary for performance of construction activities.

J. Use for Construction: Use only final submittals with mark indicating action taken by Engineer in connection with construction.

PART 2 - PRODUCTS

2.1 ACTION SUBMITTALS

A. General: Prepare and submit Action Submittals required by individual Specification Sections or as specified on the Drawings. Submittals covering more than one specification section will not be allowed.

1. Number of Copies: Submit one electronic copy of each submittal, unless it's a sample or otherwise indicated. Engineer will return one electronic copy to be retained as a Project Record Document.

B. Shop Drawings: Prepare Project-specific information, drawn accurately to scale. Do not base Shop Drawings on reproductions of the Contract Documents or standard printed data.

1. Preparation: Include the following information, as applicable:
   a. Dimensions.
   b. Identification of products.
   c. Fabrication and installation drawings.
   d. Roughing-in and setting diagrams.
   e. Wiring diagrams showing field-installed wiring, including power, signal, and control wiring.
   f. Shop work manufacturing instructions.
   g. Templates and patterns.
   h. Schedules.
   i. Design calculations.
   j. Compliance with specified standards.
   k. Notation of coordination requirements.
   l. Notation of dimensions established by field measurement.
2. Wiring Diagrams: Differentiate between manufacturer-installed and field-installed wiring.
3. Sheet Size: Except for templates, patterns, and similar full-size drawings, submit Shop Drawings on sheets at least 8-1/2 by 11 inches but no larger than 11 by 17 inches.

C. Product Data: Collect information into a single submittal for each element of construction and type of product or equipment.

1. If information must be specially prepared for submittal because standard printed data are not suitable for use, submit as Shop Drawings, not as Product Data.
2. Mark each copy of each submittal to show which products and options are applicable.
3. Include the following information, as applicable:
   a. Manufacturer's written recommendations.
   b. Manufacturer's product specifications.
   c. Manufacturer's installation instructions.
   d. Standard color charts.
   e. Manufacturer's catalog cuts.
   f. Wiring diagrams showing factory-installed wiring.
   g. Printed performance curves.
   h. Operational range diagrams.
   i. Mill reports.
   j. Standard product operating and maintenance manuals.
   k. Compliance with recognized trade association standards.
   l. Compliance with recognized testing agency standards.
   m. Application of testing agency labels and seals.
   n. Notation of coordination requirements.

D. Samples: Furnish samples required by the Contract Documents for the Engineer's approval. Samples shall be delivered to the Engineer as specified or directed. Unless specified otherwise, provide at least two samples of each required item. Materials or equipment for which samples are required shall not be used in the work unless and until approved by Engineer.

1. Preparation: Include the following information, as applicable:
   a. Physical examples of the work
   b. Small cuts or containers of materials
   c. Complete units of repetitively used products
   d. Color/texture/patterns swatches
   e. Specimens for coordination of visual effects, graphic symbols, and other specified units of work

E. Operation and Maintenance Manuals:

1. Submit in assembled manuals as specified in Division 1 Section "Contract Closeout." Such manuals shall include detailed instructions for Owner personnel on safe operation procedures, controls, start-up, shut-down, emergency procedures, storage, protection, lubrication, testing, trouble-shooting, adjustments, repair procedures, and other maintenance requirements.

F. Site Usage Plan:

1. Submit a proposed site staging plan, including but not limited to the location of office trailers, storage trailers and material laydown areas. Such plan shall be a graphic presentation (drawing) of the proposed locations; and, shall include on-site traffic modifications, and temporary utilities, as may be applicable.

G. Payment Application

1. If an application form is included in the Contract Documents, use that form unless otherwise approved by the Engineer and Owner. If an application form is

not included in the Contract Documents, Contractor may purpose a form for approval.

2.2 INFORMATIONAL SUBMITTALS

A. General: Prepare and submit Informational Submittals required by individual Specification Sections or as specified on the Drawings. Submittals covering more than one specification section will not be allowed.

1. Number of Copies: Submit one electronic copy of each submittal, unless it's otherwise indicated. Engineer will return one electronic copy to be retained as a Project Record Document.

B. Shop Drawing Schedule:

1. Prepare and submit a schedule indicating when shop drawings are required to be submitted to support the as-planned construction schedule. The submittal schedule shall allow sufficient time for preparation and submittal, review and response, and fabrication and delivery to support the construction schedule.

C. Progress Schedule:

1. Prepare and submit construction schedules and monthly status reports as specified.

D. Schedule of Submittals:

1. Prepare and submit schedule of submittals as specified in the General Conditions.

E. Construction Photography

1. Provide periodic construction photographs as specified.

F. Special Guarantee: Suppliers or manufacturer's guarantee as required in the specifications.

G. Statement of Qualifications: Evidence of qualification, certification, and/or registration as required by the Contract Documents to verify specific qualifications of subcontractors and suppliers. For example, land surveyor, engineer, materials testing laboratory, specialty subcontractor, trade, specialist, installer, and other professionals are required by the specifications or as noted on the Drawings.

H. Work Plans:

1. Prepare and submit copies of all work plans needed to demonstrate to the Owner that Contractor has adequately thought-out the means and methods of construction and their interface with existing facilities. Work plans and follow-up preparatory meetings shall be conducted for all major work items. All parties involved in the construction of that work item shall attend preparatory meeting.

I. Traffic Plans:

1. Prepare traffic plans where and when required by the Contract Documents and local ordinances or regulations. If Contractor is not already knowledgeable about local ordinances and regulations regarding traffic requirements, become familiar with such requirements and include all costs for preparation and submittal of traffic management plan, as specified. In addition, unless a supplemental

payment provision is provided in the bid form, include the cost of all police attendance, when required.

J. Outage Requests

1. Provide sufficient notification of any outages required (electrical, flow process, etc.) as may be required to tie-in new work into the existing facilities. Unless specified otherwise elsewhere, a minimum of seven calendar days' notice shall be provided.

K. Proposed Testing Procedures

1. Prepare and submit testing procedures proposed to perform testing required by the various technical specifications.

L. Test and Inspection Reports:

1. Comply with requirements in Section 01400, Contractor Quality Control.
2. Provide copies of all test records and reports as specified in the various technical specifications.
3. Material Test Reports: Prepare reports written by a qualified testing agency, on testing agency's standard form, indicating and interpreting test results of material for compliance with requirements.
4. Preconstruction Test Reports: Prepare reports written by a qualified testing agency, on testing agency's standard form, indicating and interpreting results of tests performed before installation of product, for compliance with performance requirements.
5. Compatibility Test Reports: Prepare reports written by a qualified testing agency, on testing agency's standard form, indicating and interpreting results of compatibility tests performed before installation of product. Include written recommendations for primers and substrate preparation needed for adhesion.
6. Field Test Reports: Prepare reports written by a qualified testing agency, on testing agency's standard form, indicating and interpreting results of field tests performed either during installation of product or after product is installed in its final location, for compliance with requirements.
7. Product Test Reports: Prepare written reports indicating current product produced by manufacturer complies with requirements. Base reports on evaluation of tests performed by manufacturer and witnessed by a qualified testing agency, or on comprehensive tests performed by a qualified testing agency.
8. Manufacturer's Field Reports: Prepare written information documenting factory-authorized service representative's tests and inspections. Include the following, as applicable:
    a. Name, address, and telephone number of factory-authorized service representative making report.
    b. Statement on condition of substrates and their acceptability for installation of product.
    c. Statement that products at Project site comply with requirements.
    d. Summary of installation procedures being followed, whether they comply with requirements and, if not, what corrective action was taken.
    e. Results of operational and other tests and a statement of whether observed performance complies with requirements.
    f. Statement whether conditions, products, and installation will affect warranty.

g. Other required items indicated in individual Specification Sections.

M. Vendor Training Outlines/Plans:

1. At least two weeks before scheduled training of Owner's personnel, provide lesson plans for vendor training in accordance with the specification for O&M manuals.

N. Test and Start-up Reports:

1. Manufacturer(s) shall perform all pre-start-up installation inspection, calibrations, alignments, and performance testing as specified in the respective technical specifications. Provide copies of all such test and start-up reports.

O. Certifications:

1. Provide various certifications as required by the technical specifications. Such certifications shall be signed by an officer (of the firm) or other individual authorized to sign documents of behalf of that entity.
2. Certifications may include, but are not limited to:
   a. Certifications of Installation, Testing and Training for all equipment
   b. Material Testing reports furnished by an independent testing firm
   c. Certifications from manufacturer(s) for specified factory testing
   d. Product Certificates: Prepare written statements on manufacturer's letterhead certifying that product complies with requirements.
   e. Installer Certificates: Prepare written statements on manufacturer's letterhead certifying that Installer complies with requirements and, where required, is authorized for this specific Project.
   f. Manufacturer Certificates: Prepare written statements on manufacturer's letterhead certifying that manufacturer complies with requirements. Include evidence of manufacturing experience where required.
   g. Material Certificates: Prepare written statements on manufacturer's letterhead certifying that material complies with requirements.

P. Design Data:

1. Prepare written and graphic information, including, but not limited to, performance and design criteria, list of applicable codes and regulations, and calculations. Include list of assumptions and other performance and design criteria and a summary of loads. Include load diagrams if applicable. Provide name and version of software, if any, used for calculations. Include page numbers.

Q. Manufacturer(s) Instructions:

1. Prepare written or published information that documents manufacturer's recommendations, guidelines, and procedures for installing or operating a product or equipment. Include name of product and name, address, and telephone number of manufacturer. Include the following, as applicable:
   a. Preparation of substrates.
   b. Required substrate tolerances.
   c. Sequence of installation or erection.
   d. Required installation tolerances.
   e. Required adjustments.
   f. Recommendations for cleaning and protection.

R. Record Drawings:
   1. No later than Substantial Completion, submit a record of all changes during construction not already incorporated into drawings – in accordance with Division 1 Contract Closeout.

S. Record Shop Drawings:
   1. Before final payment is made, furnish one set of record shop drawings to the Engineer. These record shop drawings shall be in conformance with the approved documents and should show any field conditions which may affect their accuracy.

T. Submittals required by laws, regulations and governing agencies:
   1. Prepare and submit all documentation required by state or local law, regulation or government agency directly to the applicable agency. This includes, but is not limited to, notifications, reports, certifications, certified payroll (for projects subject to wage requirements) and other documentation required to satisfy all requirements. Provide to Engineer one hard copy or electronic copy of each submittal made in accordance with this paragraph.

U. Warranties, Insurance Certificates and Bonds:
   1. Prepare written information indicating current status of insurance or bonding coverage. Include name of entity covered by insurance or bond, limits of coverage, amounts of deductibles, if any, and term of the coverage.
   2. Assemble a booklet or binder of all warranties and bonds as specified in the various technical specifications and in accordance with the Division 1 Contract Closeout. Provide two originals to the Engineer.

V. Contract Close-Out Documents:
   1. Submit documentation as indicated in Division 1 Section 01700, Contract Closeout.

W. Material Safety Data Sheets:
   1. Submit information directly to Owner. If submitted to Engineer, Engineer will not review this information but will return it with no action taken.

X. Other requirements of the technical Specification Sections:
   1. Comply with all other requirements of the technical specification sections.

PART 3 - EXECUTION

3.1 CONTRACTOR'S ACTION

A. Coordination of Submittal Times: Prepare and transmit each submittal sufficiently in advance of performing the related work or other applicable activities, or within the time specified in the individual work or other related Sections, so that the installation will not be delayed by processing times including disapproval and resubmittal (if required). Coordinate with other submittals, testing, purchasing, fabrication, delivery and similar sequenced activities.

B. Review all submittals in full to assure that the submittal meets the requirements of the specifications. Note any variances and request review as a substitute, where applicable.

C. Before submission to the Engineer, review shop drawings as follows:
   1. Make corrections and add field measurements, as required
   2. Use any color for its notations except red (reserved for the Engineer's notations) and black (to be able to distinguish notations on black and white documents)
   3. Include Contractor's Certification statement
   4. Provide field measurements (as needed)
   5. Coordinate with other submittals
   6. Indicate relationships to other features of the work
   7. Highlight information applicable to the work and/or delete information not applicable to the work

D. Resubmit as needed in a timely fashion and provide additional information and/or corrections in accordance with the Contract and the Engineer's response.

3.2 ENGINEER'S ACTION

A. General: Engineer will not review submittals that do not bear required certification statement, signature, and date of the responsible person and will return them without action.

B. Action Submittals: Engineer will review each submittal, make marks to indicate corrections or modifications required, and return it. Engineer will mark each submittal to indicate action taken, as follows:
   1. "Approved as Submitted (AAS)" – This code is assigned when there are no notations or comments on the submittal. When returned under this code the Contractor may release the equipment and/or material for manufacture, or move ahead with construction of that element of Work.
   2. "Approved as Noted (AAN)" – This code is assigned when there are notations or comments on the submittal. When returned under this code the Contractor may release the equipment and/or material for manufacture, or move ahead with construction of that element of Work; however, all notations and comments must be incorporated into the final product.
   3. "Partial Approval, Resubmit as Noted (PAR)" – This code is assigned when part of the submittal is approved and others require a resubmittal as noted. When returned under this code the Contractor may release the equipment and/or material for manufacture for portions of the Work that are approved, or move ahead with construction of that particular element of Work in accordance with Engineer's comments. However, elements that are interconnected or dependent on one another that have not been approved, should be carefully considered before moving on with the Work element.
   4. "Not Subject to Review (NSR)" – This code is assigned when a confirmation of notations and comments IS NOT required by the Contractor. The Contractor may release the equipment or material for manufacture; however, all notations and comments must be incorporated into the final product.
   5. "Revise and Resubmit (RAR)" –This combination of codes is assigned when notations and comments are extensive enough to require a resubmittal of the

entire package. This resubmittal is to address all comments, omissions and non-conforming items that were noted.

C. Informational Submittals: Engineer will review each submittal and return it as "ACCEPTED", or will reject and return it if it does not comply with requirements as "REJECTED (AS NOTED)."

D. Submittals not required by the Contract Documents will not be reviewed and may be discarded.

END OF SECTION

SECTION 01320

CONSTRUCTION PROGRESS DOCUMENTATION

PART 1 - GENERAL

1.1 SUMMARY

A. This Section includes administrative and procedural requirements for documenting the progress of construction during performance of the Work.

1.2 DEFINITIONS

A. Activity: A discrete part of a project that can be identified for planning, scheduling, monitoring, and controlling the construction project. Activities included in a construction schedule consume time and resources.
   1. Critical activities are activities on the critical path. They must start and finish on the planned early start and finish times.
   2. Predecessor activity is an activity that must be completed before a given activity can be started.

B. Event: The starting or ending point of an activity.

C. Float: The measure of leeway in starting and completing an activity.
   1. Float time is not for the exclusive use or benefit of either Owner or Contractor, but is a jointly owned, expiring Project resource available to both parties as needed to meet schedule milestones and Contract completion date.
   2. Free float is the amount of time an activity can be delayed without adversely affecting the early start of the following activity.
   3. Total float is the measure of leeway in starting or completing an activity without adversely affecting the planned Project completion date.

D. Milestone: A key or critical point in time for reference or measurement.

E. Network Diagram: A graphic diagram of a network schedule, showing activities and activity relationships.

1.3 SUBMITTALS

A. Informational Submittals:
   1. Preliminary Construction Schedule: Submit at the Preconstruction Meeting.
   2. Contractor's Detailed Construction Schedule: Submit initial detailed schedule within 15 calendar days after Effective Date of the Agreement. Submit Progress Schedule updates monthly thereafter.
      a. Submit with each progress schedule Contractor’s certification that the progress schedule submission is the actual schedule being utilized for execution of the Work.

b. Submit with each progress schedule a Narrative Progress Report

3. Prior to Final Payment submit a final Updated Progress Schedule.

1.4 COORDINATION

A. Coordinate preparation and processing of schedules and reports with performance of construction activities and with scheduling and reporting of separate contractors.

B. Coordinate Progress Schedule, list of subcontracts, Submittals Schedule, progress reports, payment requests, and other required schedules and reports.

1. Secure time commitments for performing critical elements of the Work from parties involved.
2. Coordinate each construction activity in the network with other activities and schedule them in proper sequence.

PART 2 - PRODUCTS

2.1 GENERAL

A. Time Frame: Extend schedule from date established for the Notice to Proceed to date of Substantial Completion.

1. Contract completion date shall not be changed by submission of a schedule that shows an early completion date, unless specifically authorized by Change Order.
2. Procurement Activities: Include procurement process activities for long lead items and major items, requiring a cycle of more than 60 days, as separate activities in schedule. Procurement cycle activities include, but are not limited to, submittals, approvals, purchasing, fabrication, and delivery.
3. Submittal Review Time: Include review and resubmittal times indicated in Division 1 Section "Submittal Procedures" in schedule. Coordinate submittal review times in Contractor's Construction Schedule with Submittals Schedule.
4. Startup and Testing Time: Include time for startup and testing.
5. Substantial Completion: Indicate completion in advance of date established for Substantial Completion, and allow time for Engineer's administrative procedures necessary for certification of Substantial Completion.

B. Constraints: Include constraints and work restrictions indicated in the Contract Documents and as follows in schedule, and show how the sequence of the Work is affected.

C. Milestones: Include milestones indicated in the Contract Documents in schedule, including, but not limited to, the Notice to Proceed, Substantial Completion, and Final Completion.

D. Contract Modifications: For each proposed contract modification and concurrent with its submission, prepare a time-impact analysis using fragnets to demonstrate the effect of the proposed change on the overall project schedule.

PART 3 - EXECUTION

3.1 PRELIMINARY CONSTRUCTION SCHEDULE

A. Bar-Chart (Gantt) Schedule: Submit preliminary horizontal bar-chart-type construction schedule at the Preconstruction Meeting.

B. Preparation: Indicate each significant construction activity separately. Identify first workday of each week with a continuous vertical line. Outline significant construction activities for construction.

3.2 CONTRACTOR'S CONSTRUCTION PROGRESS SCHEDULE

A. Build off the Engineer’s accepted Preliminary Construction Schedule to establish the baseline schedule for the project.

B. Bar-Chart (Gantt) Schedule: Submit horizontal bar-chart-type construction schedule.

C. Preparation: Indicate each significant construction activity separately. Identify first workday of each week with a continuous vertical line. Outline significant construction activities for construction breaking out in further detail the Work activities shown in the Preliminary Construction Schedule.

D. Contractor's Progress Schedule Updating: At monthly intervals, update schedule to reflect actual construction progress and activities. Progress schedule shall be submitted to the Engineer at least monthly.
   1. Include a report with updated schedule that indicates every change, including, but not limited to, changes in logic, durations, actual starts and finishes, and activity durations.
   2. As the Work progresses, indicate Actual Completion percentage for each activity.

E. For each weekly construction meeting, provide a 3-week look ahead schedule that further breaks out the Work activities shown in the Progress Schedule.

3.3 NARRATIVE PROGRESS REPORT

A. Format:
   1. Organized same as Progress Schedule with description of each activity.
   2. Identify the reporting period.

B. Contents:
   1. Number of days worked over the period, work force on-hand, construction equipment on-hand.
   2. General Work progress, including a listing of activities started and completed during the period, subcontractors and suppliers, and major work activities (milestones) achieved.
   3. Identification of any potential change orders and any new activities as a result of executed Change Orders.

4. Documentation of weather conditions and any resulting impacts to Work.
5. Description of any actual or potential delays, including related causes, and the steps taken or anticipated to be taken to mitigate their impact.
6. Any changes to the activity logic or critical path.
7. Identification of, and accompanying reason for, any activities added or deleted since the last report.
8. Steps to be taken for recovery of schedule from Contractor-caused delays.

C. SCHEDULE REVIEW AND ACCEPTANCE

1. Engineer's acceptance of a schedule will demonstrate by agreement that:
   a. Contract Times, including Substantial and Final Completion, and any and all Milestones are met within the specified times.
   b. Any specified Work sequences and constraints are shown.
   c. Any specified Owner-furnished equipment or materials arrival dates, and incorporation of such items into Work.
   d. Access restrictions are accurately reflected.
   e. Start-up and testing times are shown.
2. In all respects, Engineer's acceptance of Contractor's schedule indicates that in Engineer's judgment the schedule represents a reasonable plan for constructing the project in accordance with the Contract Documents. Engineer's review does not make any changes to the Contract requirements. Lack of comment will not does not indicate acceptance of a change unless Contractor has explicitly called the nonconformance to Engineer's attention in the submittal. The schedule remains the Contractor's responsibility throughout the duration of the project, and Contractor retains responsibility for performing all activities, for all activity durations, and activity sequences required to construct the project in accordance with the Contract Documents.
3. In the case of an unacceptable Preliminary Progress Schedule, Contractor shall make changes within 5 calendar days and resubmit until it is acceptable to Engineer as a baseline schedule through the resubmittal process. At which time, the Contractor shall update the schedule on a monthly basis to reflect actual progress and occurrences to date.
4. In the case of an unacceptable Detailed Progress Schedule, the Contractor shall make changes within 5 calendar days and resubmit until it is acceptable to Engineer through the resubmittal process.
5. Narrative Report: All changes to activity duration and sequences, including addition or deletion of activities subsequent to Engineer's acceptance of the baseline schedule shall be clearly explained in the report current with the proposed Progress Schedule.

END OF SECTION

SECTION 01340

REQUESTS FOR INFORMATION (RFI)

PART 1 - GENERAL

1.1 SUMMARY

A. This Section contains the procedures to be followed by Contractor for submitting a Request for Information (RFI) upon discovery of any apparent conflicts, omissions, or errors in the Contract Documents or Drawings or upon having any question concerning Information.

1.2 DEFINITIONS

A. Request for Information: A document submitted by the Contractor requesting clarification of a portion of the Contract Documents, hereinafter referred to as an RFI.

1.3 ADMINISTRATIVE REQUIREMENTS

A. Description: Section provides procedure for Contractors to obtain interpretation or clarification of the Contract Documents, or identify apparent conflicts, omissions, or errors in the Contract Documents.

B. Responsible Person for Contractor: Submit name of the individual authorized to receive Requests for Information documents, and who is responsible for forwarding Request.

C. RFI Format: Submit all Requests for Information on the form provided by the Engineer.

1.4 CONTRACTOR'S REQUESTS FOR INFORMATION (RFIs)

A. General: Should Contractor be unable to determine from the Contract Documents the exact material, process, or system to be installed; or when the elements of construction are required to occupy the same space (interference); or when an item of Work is described differently at more than one place in the Contract Documents; the Contractor shall request that the Engineer make an interpretation of the requirements of the Contract Documents to resolve such matters. Contractor shall comply with procedures specified herein.

B. Submission: RFIs shall be prepared and submitted on a form provided by the Engineer.
   1. Forms shall be completely filled in, and if prepared by hand, shall be fully legible after scanning or photocopying.
   2. Each RFI shall be given a discrete, consecutive number starting with 1.
   3. Each page of the RFI and each attachment to the RFI shall bear the following:
      a. Date of Submission
      b. Project Number

c. Project Name
d. RFI Number
e. Descriptive Title

4. Contractor shall sign all RFIs attesting to good faith effort to determine from the Contract Documents the information requested for Information. Frivolous RFIs shall be subject to reimbursement from Contractor to the Owner for fees charged by Engineer, Engineer's consultants and other design professions engaged by the Owner.

C. Subcontractor-Initiated and Supplier-Initiated RFIs: RFIs from subcontractors and material suppliers shall be submitted through, be reviewed by and be attached to an RFI prepared, signed, and submitted by Contractor. RFIs submitted directly by subcontractors or material suppliers will be returned unanswered to the Contractor.

1. Contractor shall review all subcontractor- and supplier-initiated RFIs and take actions to resolve issues of coordination, sequencing and layout of the Work.
2. RFIs submitted to request clarification of issues related to means, methods, techniques and sequences of construction or for establishing trade jurisdictions and scopes of subcontracts will be returned without Information. Such issues are solely the Contractor's responsibility.
3. Contractor shall be responsible for delays resulting from the necessity to resubmit an RFI due to insufficient or incorrect information presented in the RFI.

D. Unacceptable Uses for RFIs: RFIs shall not be used to request the following:

1. Approval of submittals (use procedure specified in Section 01300 - Submittals)
2. Approval of substitutions (refer to 01600 - Product Requirements)
3. Changes that entail change in Contract Time and Contract Sum (comply with provisions of the General Conditions)
4. Different methods of performing Work than those indicated in the Contract Drawings and Specifications (comply with provisions of the General Conditions).

E. RFI Log: Contractor shall prepare and maintain a log of RFIs, and at any time requested by the Engineer or Owner, the Contractor shall furnish copies of the log showing all outstanding RFIs.

PART 2 - PRODUCTS (NOT USED)

PART 3 - EXECUTION (NOT USED)

3.1 Submit per the General Conditions. Additionally, electronic RFI requests will be accepted. Notification time begins from the date stamp of the Engineer's mail or email received date.

3.2 Requested Information: Contractor shall carefully study the Contract Documents, in particular to ensure that information sufficient for Information of requirements of the Contract Documents is not included. RFIs that request Information of requirements clearly indicated in the Contract Documents will be returned without Information.

A. In all cases in which RFIs are issued to request clarification of issues related to means, methods, techniques and sequences of construction, for example, pipe and duct routing, clearances, specific locations of Work shown diagrammatically, apparent interferences and similar items, the Contractor shall furnish all information required for the Engineer or Owner to analyze and/or understand the circumstances causing the RFI and prepare a clarification or direction as to how the Contractor shall proceed.

B. If information included with this type RFI by the Contractor is insufficient, the RFI will be returned unanswered.

3.3 Response Time: Request clarifications or information immediately upon discovery of need. Submit RFI's in a timely manner allowing full response time to avoid impacting Progress Schedule.

A. Engineer, whose decision will be final, shall resolve issues and respond to questions of Contractor, in most cases, within ten calendar days. Actual time may be lengthened for complex issues, or shortened for expedited situations, as mutually agreed in writing.

B. After submission of an RFI by Contractor and prior to receipt of the RFI response from Engineer, the Contractor proceeds with affected Work at own risk. Any portion of the Work not constructed in accordance with Engineer interpretation, clarification, instruction or decision is subject to removal and replacement at Contractor expense.

3.4 Disputed Requirements: In the event the Contractor believes that a clarification by the Engineer results in additional cost or time, Contractor shall comply with the Contract General Conditions.

END OF SECTION

SECTION 01400

CONTRACTOR QUALITY CONTROL

PART 1 - GENERAL

1.1 SUMMARY

A. This Section includes administrative and procedural requirements for Contractor's construction quality control (CQC).
   1. Specific quality-control requirements for individual construction activities are specified in the Sections that specify those activities. Requirements in those Sections may also cover production of standard products.
   2. Specified tests, inspections, and related actions do not limit Contractor's quality-control procedures that facilitate compliance with the Contract Document requirements.
   3. Requirements for Contractor to provide quality-control services required by Engineer, Owner, or authorities having jurisdiction are not limited by provisions of this Section.

1.2 DEFINITIONS

A. Construction Quality Control (CQC): Tests, inspections, procedures, and related actions during and after execution of the Work by the Contractor to guard against defects and deficiencies and ensure that proposed construction complies with Contract requirements. CQC activities as administered by the Contractor shall be coordinated with all Owner's Construction Quality Assurance.

B. Construction Quality Assurance (CQA): Activities, actions, and procedures performed before and during execution of the Work by the Owner or its representative to monitor Work and provide an independent check of Contractor's Work. Refer to Article Owner's CQA for additional details related to CQA for this project.

C. Testing Agency: An agency hired by Contractor with the experience and capability to conduct testing and inspecting indicated, and that specializes in types of tests and inspections to be performed. Testing laboratory shall mean the same as testing agency.

D. Fabricator: A firm experienced in producing products similar to those indicated for this Project and with a record of successful in-service performance, as well as sufficient production capacity to produce required units.

E. Factory-Authorized Service Representative: An authorized representative of manufacturer who is trained and approved by manufacturer to inspect installation of manufacturer's products that are similar in material, design, and extent to those indicated for this Project.

F. Installer: A firm or individual experienced in installing, erecting, or assembling work similar in material, design, and extent to that indicated for this Project, whose work has resulted in construction with a record of successful in-service performance with all necessary training and certifications.

G. Manufacturer: A firm experienced in manufacturing products or systems similar to those indicated for this Project and with a record of successful in-service performance.

1.3 SUBMITTALS

A. Informational Submittals:

1. Qualification Data: For testing agencies specified to demonstrate their capabilities and experience. Include proof of qualifications in the form of a recent report on the inspection of the testing agency by a recognized authority.
2. CQC Plan: Submit no later than 10 calendar days after receipt of Notice to Proceed.
3. CQC Report: Submit weekly.
   a. Reports: Prepare and submit certified written reports that include the following:
      1) Date of issue.
      2) Project title and number.
      3) Name, address, and telephone number of testing agency.
      4) Dates and locations of samples and tests or inspections.
      5) Names of individuals making tests and inspections.
      6) Description of the Work and test and inspection method.
      7) Identification of product and Specification Section.
      8) Complete test or inspection data.
      9) Test and inspection results and an interpretation of test results.
      10) Ambient conditions at time of sample taking and testing and inspecting.
      11) Comments or professional opinion on whether tested or inspected Work complies with the Contract Document requirements.
      12) Name and signature of laboratory inspector.
      13) Recommendations on retesting and re-inspecting.
4. Permits, Licenses, and Certificates: For Owner's records, submit copies of permits, licenses, certifications, inspection reports, releases, jurisdictional settlements, notices, receipts for fee payments, judgments, correspondence, records, and similar documents, established for compliance with standards and regulations bearing on performance of the Work.

1.4 OWNER’S CQA

A. All Work is subject to Owner’s quality assurance inspection and testing at all locations and at all reasonable times before acceptance to ensure strict compliance with the terms of the Contract Documents.

B. In addition, specific CQA observations and testing for the contact water tanks and the lined concrete basin are required by state regulations. The Contractor is required to

perform these tests and CQA activities with observation by the Owner or the Owner's representative upon approval of such testing plans. Refer to Attachment A to the Contract Documents.

C. Independent inspecting services may be by the Owner or its agent to verify compliance with requirements specified or indicated. Independent testing may be conducted by the Owner separate of the Contractor's requirements, if warranted. These services do not relieve Contractor of responsibility for compliance with the Contract Document requirements, constitute or imply acceptance of Work, or affect the continuing rights of the Owner after acceptance of completed Work.

D. The presence or absence of a quality assurance inspector does not relieve Contractor from any Contract requirement.

E. Promptly furnish all facilities, labor, and materials reasonably needed for performing such safe and convenient inspections and tests as may be required for quality assurance.

F. Owner may charge Contractor for any additional costs of inspection or test when Work is not ready at the time specified by Contractor for inspection or test, or when prior rejection makes re-inspection or retest necessary, including for purposes of CQA.

G. Quality assurance inspections and tests will be performed in a manner that will not necessarily delay the Work; however, Contractor shall provide such time and coordination as necessary for quality assurance inspections and testing to be carried out.

1.5 CONTRACTOR'S CQC

A. General:
   1. The quality control system shall consist of plans, procedures, and an organization that is necessary to demonstrate that the Work complies with the Contract Documents. The system shall cover all work by the Contractor and its subcontractors, fabricators, and suppliers.
   2. Contractor shall, engage a qualified testing agency to perform these quality-control services.
      a. Contractor shall not employ the same entity engaged by Owner, unless agreed to in writing by Owner.
   3. Contractor shall, submit a certified written report of each quality-control service.
   4. Maintain complete inspection records and make them available at all times to the Owner and Owner's representative. Inspection records shall also be included in the weekly Progress Reports as specified in Section 01320, Construction Progress.

B. Preconstruction Testing: Contractor's Testing Agency shall perform preconstruction testing for compliance with specified requirements for performance and test methods.
   1. Contractor responsibilities include the following:
      a. Provide test specimens and assemblies representative of proposed materials and construction. Provide sizes and configurations of assemblies to adequately demonstrate capability of product to comply with performance requirements.

b. Submit specimens in a timely manner with sufficient time for testing and analyzing results to prevent delaying the Work.

C. Control of Installation

1. Monitor quality over suppliers, products, services, site conditions, and workmanship, to produce Work of specified quality.
2. Comply with manufacturers' instructions, including each step in sequence.
3. Examine the areas and conditions where Work is to be performed and notify the Owner of conditions detrimental to the proper and timely completion of the Work. Do not proceed with the Work until unsatisfactory conditions have been corrected by the Contractor in a manner acceptable to the Owner or Engineer.
4. Request clarification from Engineer should manufacturers' instructions conflict with Contract Documents. The clarification shall be received prior to proceeding.
5. Comply with specified standards as minimum quality for the Work except where more stringent tolerances, codes, or specified requirements indicate higher standards or more precise workmanship.
6. Work shall be performed by persons qualified to produce workmanship of specified quality.

D. Associated Services: Cooperate with agencies performing required tests, inspections, and similar quality-control services, and provide reasonable auxiliary services as requested. Notify agency sufficiently in advance of operations to permit assignment of personnel. Provide the following:

1. Access to the Work.
2. Incidental labor and facilities necessary to facilitate tests and inspections.
3. Adequate quantities of representative samples of materials that require testing and inspecting. Assist agency in obtaining samples.
4. Facilities for storage and field-curing of test samples.
5. Delivery of samples to testing agencies.
6. Preliminary design mix proposed for use for material mixes that require control by testing agency.
7. Security and protection for samples and for testing and inspecting equipment at Project site.

E. Manufacturer's Field Services: Where indicated, engage a factory-authorized service representative to inspect field-assembled components and equipment installation, including service connections. Report results in writing.

F. Retesting/Re-inspecting: Regardless of whether original tests or inspections were Contractor's responsibility, provide quality-control services, including retesting and re-inspecting, for construction that revised or replaced Work that failed to comply with requirements established by the Contract Documents. Contractor is liable for Owner’s CQA services related to retesting/re-inspecting of work.

PART 2 - PRODUCTS (NOT USED)

PART 3 - EXECUTION

3.1 CONTRACTOR'S CQC ORGANIZATION

A. The Contractor's quality control organization shall include the following individuals within the Contractor's organization with ample experience to fulfill the role and responsibilities of executing a quality control program.
   1. CQC System Manager: Provides overall management of CQC, is onsite during all construction activities (unless an alternate is approved in writing by Owner or Engineer) and has authority to act on all CQC matters for the Contractor.
   2. CQC Staff: Responsible person in-charge as directed by CQC System Manager to act on all CQC matters to ensure compliance with the Contract Documents.

3.2 CONTRACTOR'S CQC PLAN

A. An interim plan for the first 30 days of construction will be considered to expedite start of Work, before the entire plan is accepted. The interim plan, however, shall be submitted and accepted before any work covered by such plan is started.

B. Plan shall identify/describe the following:
   1. All staff, staff responsibilities, procedures, controls, instructions, and test records and forms to be used to successfully carry out CQC for the project.
   2. Notification of Changes: After acceptance of the CQC Plan, Contractor shall notify Owner or Engineer in writing a minimum of 5 calendar days prior to executing any proposed changes. All proposed changes are subject to acceptance by Owner or Engineer.

3.3 CONTRACTOR'S CQC REPORTS

A. Provide CQC reports for every 7 calendar days. Account for all days of Work through the duration of the project. Reports shall be signed and dated by the CQC System Manager. Include in the CQC Reports copies of test reports prepared by CQC staff and Testing Agency.

B. Records shall be provided in an acceptable form and shall have a complete description of all inspections, inspection results, and test logs. Records shall cover all conforming and deficient information, and associated corrective actions to bring work into conformance with the Contract Documents.

3.4 COORDINATION

A. General:
   1. Coordinate sequence of activities to accommodate required quality-assurance and quality-control services with a minimum of delay and to avoid necessity of removing and replacing construction to accommodate testing and inspecting.
      a. Schedule times for tests, inspections, obtaining samples, and similar activities.

B. Meetings:

1. After the Preconstruction Conference, but before start of construction, and prior to acceptance of the CQC Plan, schedule a meeting with the Engineer and Owner to discuss Contractor's quality control system.
    a. Develop a mutual understanding of the system details, including the forms that will be used for logging CQC testing and observations, control activities, testing, administration of Work, and the interrelationship with Owner's quality assurance.
2. There may be occasions when subsequent quality coordination meetings will be called by either party to reconfirm the mutual understanding of the system, address deficiencies or concerns, and discuss corrective actions to remedy such issues.

3.5 REPAIR AND PROTECTION

A. General: On completion of testing, inspecting, sample taking, and similar services, repair damaged construction and restore substrates and finishes.
    1. Provide materials and comply with installation requirements specified in other Sections of these Specifications. Restore patched areas and extend restoration into adjoining areas in a manner that eliminates evidence of patching.

B. Protect construction exposed by or for quality-control or quality-assurance service activities.

C. Repair and protection are Contractor's responsibility, regardless of the assignment of responsibility for quality-control services.

3.6 PROJECT COMPLETION INSPECTION

A. The CQC System Manager shall conduct an inspection of the Work at the completion of all major work activities or any milestones, established by the completion time stated in the Contract.

B. Punchlist:
    1. The CQC System Manager with its Staff shall develop a punchlist of items which do not conform to the Contract.
    2. Include the punchlist in the CQC Report, indicating the estimated date by which the Work will be finished or deficiencies will be corrected.
    3. The CQC Manager shall make a second (follow-up) inspection to ensure that Work has been finished or deficiencies have been corrected and notify the Owner for final sign-off and acceptance.

END OF SECTION

SECTION 01500

CONSTRUCTION AND TEMPORARY FACILITIES

PART 1 - GENERAL

1.1 SUMMARY

A. This Section includes requirements for temporary facilities and controls, including temporary utilities, support facilities, stormwater and erosion control management during construction, and security and protection facilities. Refer to Section 01040, Project Coordination for coordinating work at the site with Owner's full-time operations.

B. Temporary utilities include, but are not limited to, the following:
1. Sewers and drainage.
2. Water service and distribution.
3. Sanitary facilities, including toilets, wash facilities, and drinking-water facilities.
4. Heating and cooling facilities.
5. Ventilation.
6. Electric power service.
7. Lighting.
8. Telephone service.

C. Support facilities include, but are not limited to, the following:
1. Temporary roads and paving.
2. Dewatering facilities and drains.
3. Portable (temporary) Contact Water Tank(s) and management during the entire construction period.
4. Project identification and temporary signs.
5. Waste disposal facilities.
6. Field offices.
7. Storage and fabrication sheds.
8. Lifts and hoists.
9. Temporary elevator usage.
10. Temporary stairs.
11. Construction aids and miscellaneous services and facilities.

D. Security and protection facilities include, but are not limited to, the following:
1. Environmental protection.
2. Stormwater control.
3. Tree and plant protection.
4. Pest control.
5. Site enclosure fence.
6. Security enclosure and lockup.
7. Barricades, warning signs, and lights.
8. Covered walkways.
9. Temporary enclosures.
10. Temporary partitions.

11. Fire protection.

1.2 SUBMITTALS

A. Action Submittals:
1. Product and vendor data for commercial products and equipment.
2. Temporary Facilities and Controls Plan with the following information:
   a. Electrical power supply connection point and distribution
   b. Water supply and distribution (construction water)
   c. Portable (temporary) Contact Water Holding Tank(s).
   d. Dewatering systems
   e. Sanitary facilities
   f. Access Road and laydown areas
   g. Fencing and protective barrier locations
   h. Traffic Control (as specified herein)
   i. Dust Control
   j. Noise Control
3. Spill Prevention and Countermeasures Plan (SPCC)
4. Stormwater Management Plan and Permit(s). If required by federal and/or state rules, prepare a Stormwater Pollution Prevention Plan (SWPPP) for obtaining an NPDES Construction General Permit (CGP) by filing a Notice of Intent (NOI) and a Notice of Termination (NOT) at the conclusion of the project.

B. Informational Submittals:
1. Contractor's Health and Safety Plan.

1.3 MOBILIZATION

A. Mobilization shall include, but not be limited to the following:
1. Obtaining all required permits
2. Moving Contractor's field office, supplies, and equipment to the project site
3. Installing all temporary utilities – power and lighting facilities
4. Providing any onsite communications
5. Providing onsite sanitary and potable water as required by all laws
6. Arranging for a setup of Contractor's staging and laydown area(s) in designated areas as shown on the Drawings or agreed to otherwise with the Owner.
7. Posting all required OSHA-required notices and establishing all safety procedures
8. Having Contractor's Superintendent onsite at all times when Work activities are conducted.

1.4 PROTECTION OF WORK AND PROPERTY

A. General:
1. Comply with all Owner's safety rules while on Owner's property.
2. Use of explosives is prohibited.
3. Smoking is not allowed on the Owner's property, unless otherwise approved in designated areas.

4. Protect from damage and preserve trees, shrubs, and other plants at all times. If required as part of construction work, get Owner's approval before beginning such work that will affect trees and plantings.
5. Owner's gate will be locked during non-operating hours of the facility. Make arranges with Owner, and gain approval by Owner, for working outside of normal business operation times of the facility.
6. Protect the wetlands and stormwater drainage systems and ponds.
7. Should finds of an archaeological or paleontological nature be made within the site limits, immediately notify Owner and stop work.
8. Endangered and threatened species shall be protected. Notify Owner of construction activities that might threaten endangered or threatened species or their habitats.

1.5 EROSION AND STORMWATER MANAGEMENT DURING CONSTRUCTION

A. General:

1. Contractor shall prepare a Stormwater Pollution Prevention Plan (SWPPP) and file a Notice of Intent (NOI) with the Department of Ecology for a Construction General Permit (CGP) if triggered by the area of disturbance.
2. Contractor is responsible for instituting and maintaining all best management practices (BMPs) during the entire construction period. Manage stormwater and stabilize soil throughout the duration of construction. Cleanout features that restrict flow and accumulate sediment. Failed or overloaded BMPs shall be repaired or replaced immediately.
3. At the end of the construction period, all permanent sediment and erosion control features shall be in-place and stable. Remove any temporary measures as requested by Owner, and file a Notice of Termination (NOT) to terminate the CGP, if applicable.
4. All BMPs must be in-place and functional prior to beginning Work.
5. Protect the wetlands at all times. Stormwater is not permitted to discharge into the wetlands before being passed through a stormwater pond.
6. Contractor shall phase Work in areas to manage disturbed ground and help mitigate sediment runoff.
7. Contractor is responsible for cleaning out all ditches, culverts, catch basins, ponds, etc. that are impacted by Contractor's work to maintain performance/function throughout the entire construction period with a final cleanout at the conclusion of Work.
8. Design erosion and sediment controls to handle peak runoff conditions from a 25-year, 24-hour storm based on the U.S. Weather Bureau, "Rainfall-Frequency Atlas of the United States for Durations from 30 Minutes to 24 Hours and Return Periods from 1 to 100 years," Technical Paper No. 40, 1981, or equivalent.
9. Size temporary stormwater conveyances based on procedures presented in the U.S. Department of Agriculture, "Urban Hydrology for Small Watersheds," Soil Conservation Service Engineering Technical Release No. 55, 1986, or equal.

1.6 VEHICLE TRAFFIC

A. General:

1. Contractor's employees and all subcontractors and suppliers shall park in designated storage/laydown areas for the project. Only minimal and authorized vehicles are allowed outside of this area and shall be approved by Owner.
2. All vehicles shall access the site through the main access gate, or otherwise approved by Owner.
3. During the entire duration of this project, the facility will be open during normal business hours. It is the responsibility of the Contractor to not impede traffic and cause congestion or safety issues with operations and the customers that use this facility.

B. Traffic Control Plan:

1. Prepare and adhere to the traffic control plan as approved by the Owner and Engineer. Show and described sequences of Work that may affect the use of Owner's facilities. Use traffic control systems and features to provide safe and unrestricted passage of facility operations and customers, or a means to control traffic that may restrict use. Any and all restrictions shall be approved by Owner in advance of executing such Work.
2. Contractor shall use an electronic display board at the entrance of the facility warning customers of the construction and to follow signs and flagger's directions, where applicable.

1.7 USE CHARGES

A. General: Cost or use charges for temporary facilities are not chargeable to Owner or Engineer and shall be included in the Contractor's Contract Sum. Set up and meter electric power service use charges, whether for electricity used by all entities engaged in construction activities at Project site

1.8 PROJECT CONDITIONS

A. Conditions of Use: The following conditions apply to use of temporary services and facilities by all parties engaged in the Work:

1. Keep temporary services and facilities clean and neat.
2. Relocate temporary services and facilities as required by progress of the Work.
3. Tests and Inspections: Arrange for authorities having jurisdiction to test and inspect each temporary utility before use. Obtain required certifications and permits.

PART 2 - PRODUCTS

2.1 MATERIALS

A. General: Provide new materials. Undamaged, previously used materials in serviceable condition may be used if approved by Engineer. Provide materials suitable for use intended.

B. Use industrial-grade materials that are for the intended purpose of the application.

2.2 EQUIPMENT

A. General: Provide equipment suitable for intended use.

B. Field Offices: Mobile units or other suitable unit with lockable entrances, operable windows, and serviceable finishes; heated and air conditioned; on foundations adequate for normal loading.

C. Fire Extinguishers: Hand carried, portable, UL rated. Provide class and extinguishing agent as indicated or a combination of extinguishers of NFPA-recommended classes for exposures.
   1. Comply with NFPA 10 and NFPA 241 for classification, extinguishing agent, and size required by location and class of fire exposure.

D. Self-Contained Toilet Units: Single-occupant units of chemical, aerated recirculation, or combustion type; vented; fully enclosed with a glass-fiber-reinforced polyester shell or similar nonabsorbent material.

E. Drinking-Water Fixtures: Containerized, tap-dispenser, bottled-water drinking-water units, including paper cup supply.

F. Heating Equipment: Unless Owner authorizes use of permanent heating system, provide vented, self-contained, liquid-propane-gas or fuel-oil heaters with individual space thermostatic control.
   1. Use of gasoline-burning space heaters, open-flame heaters, or salamander-type heating units is prohibited.
   2. Heating Units: Listed and labeled, by a testing agency acceptable to authorities having jurisdiction, and marked for intended use for type of fuel being consumed.

G. Electrical Outlets: Properly configured, NEMA-polarized outlets to prevent insertion of 110- to 120-V plugs into higher-voltage outlets; equipped with ground-fault circuit interrupters, reset button, and pilot light.

H. Power Distribution System Circuits: Where permitted and overhead and exposed for surveillance, wiring circuits, not exceeding 125-V ac, 20-A rating, and lighting circuits may be nonmetallic sheathed cable.

I. Portable (Temporary) Contact Water Holding Tank(s): During the entirety of the project, the Contractor shall provide and manage onsite tank(s) to safely hold contact water until

the project is completed and the tanks are turned over for contact water storage. Management shall include hauling and disposal of such liquid. The storage capacity shall be a minimum of 250 gallons or larger to adequately store contact water in a safe and responsible manner through the entire duration of the project.

2.3 PROJECT SIGN

A. Provide and maintain one 8-foot wide by 4-foot tall sign constructed of ¾-inch exterior overlaid plywood. Sign should be professionally made and bear the name of the project, the Owner's name, Contractor's name, and Engineer's name. Letters shall be blue applied on a white background by a professional sign maker. Paint or decals shall be made for exterior applications. Post project sign near the entrance to the facility. Coordinate with Owner.

PART 3 - EXECUTION

3.1 INSTALLATION

A. General:
1. Locate facilities where they will serve Project adequately and result in minimum interference with performance of the Work. Relocate and modify facilities as required.
2. Provide each facility ready for use when needed to avoid delay. Maintain and modify as required. Do not remove until facilities are no longer needed or are replaced by authorized use of completed permanent facilities.
3. Install products in accordance with manufacturer's instructions.

3.2 TEMPORARY UTILITY INSTALLATION

A. General:
1. Engage appropriate local utility company to install temporary service or connect to existing service. Where utility company provides only part of the service, provide the remainder with matching, compatible materials and equipment. Comply with utility company recommendations.
   a. Arrange with utility company, Owner, and existing users for time when service can be interrupted, if necessary, to make connections for temporary services.
   b. Provide adequate capacity at each stage of construction. Before temporary utility is available, provide trucked-in services.
   c. Obtain easements to bring temporary utilities to Project site where Owner's easements cannot be used for that purpose.
   d. Contractor is <u>not</u> permitted to use Owner's facilities or utilities.

B. Construction Water: Construction water is not available onsite.

C. Sanitary Facilities: Provide temporary toilets, wash facilities, and drinking-water fixtures. Comply with regulations and health codes for type, number, location, operation, and maintenance of fixtures and facilities.

1. Disposable Supplies: Provide toilet tissue, paper towels, paper cups, and similar disposable materials for each facility. Maintain adequate supply. Provide covered waste containers for disposal of used material.
2. Toilets: Install self-contained toilet units. Shield toilets to ensure privacy.
3. Drinking-Water Facilities: Provide bottled-water, drinking-water units.

D. Heating and Cooling: Provide temporary heating and cooling required by construction activities for curing or drying of completed installations or for protecting installed construction from adverse effects of low temperatures or high humidity. Select equipment from that specified that will not have a harmful effect on completed installations or elements being installed.

E. Electric Distribution: Provide receptacle outlets adequate for connection of power tools and equipment.

1. Provide waterproof connectors to connect separate lengths of electrical power cords if single lengths will not reach areas where construction activities are in progress. Do not exceed safe length-voltage ratio.

3.3 SUPPORT FACILITIES INSTALLATION

A. General: Comply with the following:

1. Locate field offices, storage sheds, sanitary facilities, and other temporary construction and support facilities where approved by Owner.

B. Temporary Roads and Paved Areas: Construct and maintain temporary roads and paved areas adequate to support loads and to withstand exposure to traffic during construction period. Locate temporary roads and paved areas within construction limits indicated on Drawings.

1. Provide dust-control treatment that is nonpolluting and non-tracking. Reapply treatment as required to minimize dust.

C. Be responsible for dust control, providing all equipment and personnel for the work. Furnish Engineer with the name(s) and telephone numbers(s) of the person(s) responsible for dust control during evenings and weekends. If a responsible person cannot be contacted or does not respond, Owner may perform or contract out dust control duties at Contract's expense.

D. Dewatering Facilities and Drains: Comply with requirements in applicable Division 2 Sections for temporary drainage and dewatering facilities and operations not directly associated with construction activities included in individual Sections. Where feasible, use same facilities. Maintain Project site, excavations, and construction free of water.

1. Dispose of rainwater in a lawful manner that will not result in flooding Project or adjoining property nor endanger permanent Work or temporary facilities or wetlands.
2. Remove snow and ice as required to minimize accumulations.

E. Temporary Signs: Prepare signs in WSDOT or site-specific (as approved by Owner) standard sizes. Install signs to inform public and persons seeking entrance to Project and where approved by Owner.

F. Waste Disposal Facilities: Provide waste-collection containers in sizes adequate to handle waste from construction operations. Containerize and clearly label hazardous, dangerous, or unsanitary waste materials separately from other waste. Comply with all site cleaning requirements.
   1. If required by authorities having jurisdiction, provide separate containers, clearly labeled, for each type of waste material to be deposited.

G. Portable Contact Water Holding Tank(s):

3.4 SECURITY AND PROTECTION FACILITIES INSTALLATION

A. Environmental Protection: Provide protection, operate temporary facilities, and conduct construction in ways and by methods that comply with environmental regulations and that minimize possible air, waterway, and subsoil contamination or pollution or other undesirable effects. Avoid using tools and equipment that produce harmful noise. Restrict use of noisemaking tools and equipment to hours that will minimize complaints from persons or firms near Project site.

B. Barricades, Warning Signs, and Lights: Comply with standards and code requirements for erecting structurally adequate barricades. Paint with appropriate colors, graphics, and warning signs to inform personnel and public of possible hazard. Where appropriate and needed, provide lighting, including flashing red or amber lights.

C. Temporary Enclosures: Provide temporary enclosures, at Contractor's discretion, for protection of construction, in progress and completed, from exposure, foul weather, other construction operations, and similar activities. Provide temporary weathertight enclosure for building exterior.
   1. Where heating or cooling is needed and permanent enclosure is not complete, provide insulated temporary enclosures. Coordinate enclosure with ventilating and material drying or curing requirements to avoid dangerous conditions and effects.
   2. Vertical Openings: Close openings of 25 sq. ft. (2.3 sq. m) or less with plywood or similar materials.
   3. Horizontal Openings: Close openings in floor or roof decks and horizontal surfaces with load-bearing, wood-framed construction.
   4. Install tarpaulins securely using fire-retardant-treated wood framing and other materials.

D. Temporary Fire Protection: Until fire-protection needs are supplied by permanent facilities, install and maintain temporary fire-protection facilities of types needed to protect against reasonably predictable and controllable fire losses. Comply with NFPA 241.
   1. Provide fire extinguishers, installed on walls on mounting brackets, visible and accessible from space being served, with sign mounted above.
      a. Field Offices: Class A stored-pressure water-type extinguishers.
   2. Store combustible materials in containers in fire-safe locations.

3. Maintain unobstructed access to fire extinguishers, fire hydrants, temporary fire-protection facilities, stairways, and other access routes for firefighting. Prohibit smoking in hazardous fire-exposure areas.
4. Supervise welding operations, combustion-type temporary heating units, and similar sources of fire ignition.

3.5 HEALTH AND SAFETY

A. General:
1. This facility is a solid waste transfer site for municipal solid waste (MSW). Hazards related to such materials exist. As such, Contractor shall be fully aware of such hazards. A health and safety plan shall be prepared by Contractor whom is experienced and qualified for working in and around such hazards. The health and safety plan shall be followed at all times by Contractor's staff and its subcontractors and suppliers that will be working onsite.
2. If a serious accident occurs, it shall be reported immediately to the Owner. Contractor shall promptly report in writing to Owner all accidents whatsoever arising out of, or in connection with, the performance of the Work whether on, or adjacent to, the project site, giving full details and statements of witnesses.

3.6 OPERATION, TERMINATION, AND REMOVAL

A. Supervision: Enforce strict discipline in use of temporary facilities. To minimize waste and abuse, limit availability of temporary facilities to essential and intended uses.

B. Maintenance: Maintain facilities in good operating condition until removal. Protect from damage caused by freezing temperatures and similar elements.
1. Maintain operation of temporary enclosures, heating, cooling, humidity control, ventilation, and similar facilities on a 24-hour basis where required to achieve indicated results and to avoid possibility of damage.
2. Prevent water-filled piping from freezing. Maintain markers for underground lines. Protect from damage during excavation operations.

C. Termination and Removal: Remove each temporary facility when need for its service has ended, when it has been replaced by authorized use of a permanent facility, or no later than Substantial Completion. Complete or, if necessary, restore permanent construction that may have been delayed because of interference with temporary facility. Repair damaged Work, clean exposed surfaces, and replace construction that cannot be satisfactorily repaired.
1. Materials and facilities that constitute temporary facilities are the property of Contractor. Owner reserves right to take possession of Project identification signs.

END OF SECTION

SECTION 01600

PRODUCT REQUIREMENTS

PART 1 - GENERAL

1.1 SUMMARY

A. This Section includes administrative and procedural requirements for selection of products for use in the Project; product delivery, storage, and handling; manufacturers' standard warranties on products; special warranties; product substitutions; and comparable (“or-equal”) products.

1.2 DEFINITIONS

A. Products: Items purchased for incorporating into the Work, whether purchased for Project or taken from previously purchased stock. The term "product" includes the terms "material," "equipment," "system," and terms of similar intent.

1. Named Products: Items identified by manufacturer's product name, including make or model number or other designation, shown or listed in manufacturer's published product literature that is current as of date of the Contract Documents.
2. New Products: Items that have not previously been incorporated into another project or facility. Products salvaged or recycled from other projects are not considered new products.
3. Comparable (“Or-Equal”) Product: Product that is demonstrated and approved through submittal process to have the indicated qualities related to type, function, dimension, in-service performance, physical properties, appearance, and other characteristics that equal or exceed those of specified product.

B. Substitutions: Changes in products, materials, equipment, and methods of construction from those required by the Contract Documents and proposed by Contractor.

C. Basis-of-Design Product Specification: Where a specific manufacturer's product is named including make or model number or other designation, to establish the significant qualities related to type, function, dimension, in-service performance, physical properties, appearance, and other characteristics for purposes of evaluating comparable products of other named manufacturers.

D. Manufacturer's Warranty: Preprinted written warranty published by individual manufacturer for a particular product and specifically endorsed by manufacturer to Owner.

E. Special Warranty: Written warranty required by or incorporated into the Contract Documents, either to extend time limit provided by manufacturer's warranty or to provide more rights for Owner.

1.3 SUBMITTALS

A. Action Submittals:

1. Substitution Requests: Show compliance with requirements for substitutions and the following, as applicable:
   - a. Statement indicating why specified material or product cannot be provided.
   - b. Coordination information, including a list of changes or modifications needed to other parts of the Work and to construction performed by Owner and separate contractors that will be necessary to accommodate proposed substitution.
   - c. Detailed comparison of significant qualities of proposed substitution with those of the Work specified. Significant qualities may include attributes such as performance, weight, size, durability, visual effect, and specific features and requirements indicated.
   - d. Product Data, including drawings and descriptions of products and fabrication and installation procedures.
   - e. Samples, where applicable or requested.
   - f. List of similar installations for completed projects with project names and addresses and names and addresses of Engineers and owners.
   - g. Material test reports from a qualified testing agency indicating and interpreting test results for compliance with requirements indicated.
   - h. Detailed comparison of Contractor's Construction Schedule using proposed substitution with products specified for the Work, including effect on the overall Contract Time. If specified product or method of construction cannot be provided within the Contract Time, include letter from manufacturer, on manufacturer's letterhead, stating lack of availability or delays in delivery.
   - i. Cost information, including a proposal of change, if any, in the Contract Sum.
   - j. Contractor's certification that proposed substitution complies with requirements in the Contract Documents and is appropriate for applications indicated.
   - k. Contractor's waiver of rights to additional payment or time that may subsequently become necessary because of failure of proposed substitution to produce indicated results.

B. Informational Submittals:

1. Product Special Or Extended Warranties

1.4 PRODUCT DELIVERY, STORAGE, AND HANDLING

A. Deliver, store, and handle products using means and methods that will prevent damage, deterioration, and loss, including theft. Comply with manufacturer's written instructions.

1. Schedule delivery to minimize long-term storage at Project site and to prevent overcrowding of construction spaces.
2. Coordinate delivery with installation time to ensure minimum holding time for items that are flammable, hazardous, easily damaged, or sensitive to deterioration, theft, and other losses.

3. Deliver products to Project site in an undamaged condition in manufacturer's original sealed container or other packaging system, complete with labels and instructions for handling, storing, unpacking, protecting, and installing.
4. Inspect products on delivery to ensure compliance with the Contract Documents and to ensure that products are undamaged and properly protected.
5. Store products to allow for inspection and measurement of quantity or counting of units.
6. Store materials in a manner that will not endanger Project structure.
7. Store products that are subject to damage by the elements, under cover in a weathertight enclosure above ground, with ventilation adequate to prevent condensation.
8. Comply with product manufacturer's written instructions for temperature, humidity, ventilation, and weather-protection requirements for storage.
9. Protect stored products from damage.

1.5 PRODUCT WARRANTIES

A. Warranties specified in other Sections shall be in addition to, and run concurrent with, other warranties required by the Contract Documents. Manufacturer's disclaimers and limitations on product warranties do not relieve Contractor of obligations under requirements of the Contract Documents.

B. Special Warranties: Prepare a written document that contains appropriate terms and identification, ready for execution. Submit a draft for approval before final execution.
1. Refer to Divisions 2 through 16 Sections for specific content requirements and particular requirements for submitting special warranties.

C. Submittal Time: Comply with requirements in Division 1 Section "Closeout Procedures."

PART 2 - PRODUCTS

2.1 PRODUCT OPTIONS

A. Compatibility of Options: If Contractor is given option of selecting between two or more products for use on Project, product selected shall be compatible with products previously selected or currently in use at the site

B. General Product Requirements: Provide products that comply with the Contract Documents, that are undamaged, and unless otherwise indicated, that are new at time of installation.
1. Provide products complete with accessories, trim, finish, fasteners, and other items needed for a complete installation and indicated use and effect.
2. Standard Products: If available, and unless custom products or nonstandard options are specified, provide standard products of types that have been produced and used successfully in similar situations on other projects.
3. Or Equal: Where products are specified by name and accompanied by the term "or equal" or "or approved equal" or "or approved," comply with provisions in

"Comparable Products" Article to obtain approval for use of an unnamed product.

C. Product Selection Procedures: Procedures for product selection include the following:
1. Product: Where Specification paragraphs or subparagraphs titled "Product" name a single product and manufacturer, provide the product named. Or-equals will be considered.
   a. Substitutions may be considered.
2. Products: Where Specification paragraphs or subparagraphs titled "Products" introduce a list of names of both products and manufacturers, provide one of the products listed that complies with requirements. Or-equals will be considered.
   a. Substitutions may be considered, unless otherwise indicated.
3. Manufacturers: Where Specification paragraphs or subparagraphs titled "Manufacturers" introduce a list of manufacturers' names, provide a product by one of the manufacturers listed that complies with requirements. Or-equals will be considered.
   a. Substitutions may be considered, unless otherwise indicated.

2.2 PRODUCT SUBSTITUTIONS

A. Timing: Engineer will consider requests for substitution if received by the Engineer in a timely manner providing at least 14 calendar days of review time by Engineer. Requests not given ample review time may be considered or rejected at discretion of Engineer.

B. Conditions: Engineer will consider Contractor's request for substitution when the following conditions are satisfied. If the following conditions are not satisfied, Engineer will return requests without action, except to record noncompliance with these requirements:
1. Requested substitution offers Owner a substantial advantage in cost, time, energy conservation, or other considerations, after deducting additional responsibilities Owner must assume. Owner's additional responsibilities may include compensation to Engineer for redesign and evaluation services, increased cost of other construction by Owner, and similar considerations.
2. Requested substitution does not require extensive revisions to the Contract Documents.
3. Requested substitution is consistent with the Contract Documents and will produce indicated results.
4. Substitution request is fully documented and properly submitted.
5. Requested substitution will not adversely affect Contractor's Construction Schedule.
6. Requested substitution has received necessary approvals of authorities having jurisdiction.
7. Requested substitution is compatible with other portions of the Work.
8. Requested substitution has been coordinated with other portions of the Work.
9. Requested substitution provides specified warranty.

2.3 COMPARABLE (“OR EQUAL”) PRODUCTS

A. Where products or manufacturers are specified by name, submit the following, in addition to other required submittals, to obtain approval of an unnamed product:

1. Evidence that the proposed product does not require extensive revisions to the Contract Documents, that it is consistent with the Contract Documents (i.e., is not a substitution) and will produce the indicated results, and that it is compatible with other portions of the Work.
2. Detailed comparison of significant qualities of proposed product with those named in the Specifications. Significant qualities include attributes such as performance, weight, size, durability, visual effect, and specific features and requirements indicated.
3. Evidence that proposed product provides specified warranty.
4. List of similar installations for completed projects with project names and addresses and names and addresses of Engineers and owners, if requested.
5. Samples, if requested.

PART 3 - EXECUTION (NOT USED)

END OF SECTION

SECTION 01700

CONTRACT CLOSEOUT

PART 1 - GENERAL

1.1 SUMMARY

A. This Section includes administrative and procedural requirements for contract closeout, including, but not limited to, the following:
   1. Inspection procedures.
   2. Project record documents.
   3. Operation and maintenance manuals.
   4. Instruction of Owner's personnel.
   5. Final cleaning.

1.2 SUBMITTALS

A. Action Submittals:
   1. List of Incomplete Items (Punch list)
   2. Operation and Maintenance Manuals

1.3 SUBSTANTIAL COMPLETION

A. Preliminary Procedures: Before requesting inspection for determining date of Substantial Completion, complete the following list of items below. Also refer to the General Conditions for additional submittals and procedures for Substantial Completion.
   1. Prepare a list of items to be completed and corrected (punch list), the value of items on the list, and reasons why the Work is not complete.
   2. Advise Owner of pending insurance changeover requirements in accordance with the General Conditions.
   3. Submit specific warranties, Performance bonds, maintenance service agreements, final certifications, and similar documents.
   4. Obtain and submit releases permitting Owner unrestricted use of the Work and access to services and utilities. Include occupancy permits, operating certificates, and similar releases.
   5. Prepare and submit Project Record Documents, operation and maintenance manuals, damage or settlement surveys, property surveys, and/or similar final record information.
   6. Deliver tools, spare parts, extra materials, and similar items to location designated by Owner. Label with manufacturer's name and model number where applicable.
   7. Make final changeover of permanent locks and deliver keys to Owner. Advise Owner's personnel of changeover in security provisions.
   8. Complete startup testing of systems.
   9. Submit test/adjust/balance records.

10. Terminate and remove temporary facilities from Project site, construction tools, and similar elements.
11. Advise Owner of changeover in heat and other utilities.
12. Submit changeover information related to Owner's occupancy, use, operation, and maintenance.
13. Complete final cleaning requirements, including touchup painting.
14. Touch up and otherwise repair and restore marred exposed finishes to eliminate visual defects.

B. Inspection: Following the submittal of the preliminary documents described above, inspection of the Work shall be completed in accordance with the General Conditions.

1.4 FINAL COMPLETION

A. Preliminary Procedures: Before requesting final inspection for determining date of Final Completion, complete the following:
1. Submit a final Application for Payment.
2. Submit certified copy of Engineer's Substantial Completion inspection list of items to be completed or corrected (punch list), endorsed and dated by Engineer. The certified copy of the list shall state that each item has been completed or otherwise resolved for acceptance.
3. Submit evidence of final, continuing insurance coverage complying with insurance requirements.
4. Submit evidence that bonds shall be in effect until one year after the date when final payment becomes due or until completion of the correction period specified, whichever is later.
5. Instruct Owner's personnel in operation, adjustment, and maintenance of products, equipment, and systems.

B. Inspection: Submit a written request for final inspection for acceptance. On receipt of request, Engineer will either proceed with inspection or notify Contractor of unfulfilled requirements.
1. Re-inspection: Request re-inspection when the Work identified in previous inspections as incomplete is completed or corrected.

1.5 LIST OF INCOMPLETE ITEMS (PUNCH LIST)

A. Preparation: Include name and identification of each space and area affected by construction operations for incomplete items and items needing correction including, if necessary, areas disturbed by Contractor that are outside the limits of construction.
1. Organize list of areas in sequential order.
2. Organize items applying to each area by major element.
3. Include the following information at the top of each page:
   a. Project name.
   b. Date.
   c. Name of Engineer.
   d. Name of Contractor.
   e. Page number.

1.6 PROJECT RECORD DOCUMENTS

A. General: Do not use Project Record Documents for construction purposes. Maintain Record Documents in accordance with the General Conditions.

B. Mark Record Prints to show the actual installation where installation varies from that shown originally. Require individual or entity who obtained record data, whether individual or entity is installer, Subcontractor, or similar entity, to prepare the marked-up Record Prints. Record Prints shall, at a minimum, meet the following requirements:
   1. Give particular attention to information on concealed elements that cannot be readily identified and recorded later.
   2. Accurately record information in an understandable drawing technique.
   3. Record data as soon as possible after obtaining it. Record and check the markup before enclosing concealed installations.
   4. Mark Contract Drawings or Shop Drawings, whichever is most capable of showing actual physical conditions, completely and accurately. Where Shop Drawings are marked, show cross-reference on Contract Drawings.
   5. Mark record sets with erasable, red-colored pencil. Use other colors to distinguish between changes for different categories of the Work at the same location.
   6. Mark important additional information that was either shown schematically or omitted from original Drawings.
   7. Note Work Change Directive numbers, Change Order numbers, alternate numbers, and similar identification where applicable.
   8. Identify and date each Record Drawing; include the designation "PROJECT RECORD DRAWING" in a prominent location. Organize into manageable sets; bind each set with durable paper cover sheets. Include identification on cover sheets.

C. Miscellaneous Record Submittals: Assemble miscellaneous records required by other Specification Sections for miscellaneous record keeping and submittal in connection with actual performance of the Work. Bind or file miscellaneous records and identify each, ready for continued use and reference.

1.7 OPERATION AND MAINTENANCE MANUALS

A. Assemble a complete set of operation and maintenance data indicating the operation and maintenance of each system, subsystem, and piece of equipment not part of a system. Include operation and maintenance data required in individual Specification Sections and Drawings as follows:
   1. Operation Data:
      a. Emergency instructions and procedures.
      b. System, subsystem, and equipment descriptions, including operating standards.
      c. Operating procedures, including startup, shutdown, seasonal, and weekend operations.
      d. Description of controls and sequence of operations.
      e. Outline, cross section, and assembly drawings, engineering data, and wiring diagrams.
      f. Test data and performance curves, where applicable.

g. Piping diagrams.

2. Maintenance Data:
   a. Manufacturer's information, including list of spare parts.
   b. Name, address, and telephone number of installer or supplier.
   c. Maintenance procedures.
   d. Maintenance and service schedules for preventive and routine maintenance.
   e. Maintenance record forms.
   f. Guide to “troubleshooting”.
   g. Sources of spare parts and maintenance materials.
   h. Copies of maintenance service agreements.
   i. Copies of warranties and bonds.

B. Organize operation and maintenance manuals into suitable sets of manageable size. Bind and index data in heavy-duty, 3-ring, vinyl-covered, loose-leaf binders, in thickness necessary to accommodate contents, with pocket inside the covers to receive folded oversized sheets. Identify each binder on front and spine with the printed title "OPERATION AND MAINTENANCE MANUAL," Project name, and subject matter of contents.
   1. Submit two copies of the operation and maintenance data.
   2. Prepare a table of contents for each volume with each product or system identified.

PART 2 - EXECUTION

2.1 DEMONSTRATION AND TRAINING

A. Instruction: Instruct Owner's personnel to adjust, operate, and maintain systems, subsystems, and equipment not part of a system.
   1. Provide instructors experienced in operation and maintenance procedures.
   2. Provide instruction at mutually agreed-on times. For equipment that requires seasonal operation, provide similar instruction at the start of each season.
   3. Schedule training with Owner, through Engineer, with at least seven days’ advance notice.
   4. Coordinate instructors, including providing notification of dates, times, length of instruction, and course content.

B. Program Structure: Develop an instruction program that includes individual training modules for each system and equipment not part of a system, as required by individual Specification Sections. For each training module, develop a learning objective and teaching outline. Include instruction for the following:
   1. System design and operational philosophy.
   2. Review of documentation.
   3. Operations.
   4. Adjustments.
   5. Troubleshooting.
   6. Maintenance.
   7. Repair.

2.2 FINAL CLEANING

A. General: Provide final cleaning. Conduct cleaning and waste-removal operations to comply with local laws and ordinances and Federal and local environmental and antipollution regulations.

B. Cleaning: Employ experienced workers or professional cleaners for final cleaning. Comply with manufacturer's written instructions.

1. Complete the following cleaning operations before requesting inspection for certification of Substantial Completion for entire Project or for a portion of Project:

a. Clean project site, yard, and grounds, in areas disturbed by construction activities, including landscape development areas, of rubbish, waste material, litter, broken pipe, sheeting, worn-out parts, rejected materials, concrete, asphalt and other foreign substances.

b. Remove excess piles of gravel or soil deposited throughout project.

c. Final grade in unpaved, graveled, and un-graveled areas with a motor grader.

d. Remove all loose rocks, boulders, and coarse gravel pushed into a berm by final grading.

e. Restore surface drainage to original condition unless otherwise detailed in the project plans and specifications.

f. Sweep paved areas broom clean. Remove petrochemical spills, stains, and other foreign deposits.

g. Rake grounds that are neither planted nor paved to a smooth, even-textured surface.

h. Remove tools, construction equipment, machinery, and surplus material from Project site.

i. Clean exposed exterior and interior hard-surfaced finishes to a dirt-free condition, free of stains, films, and similar foreign substances. Avoid disturbing natural weathering of exterior surfaces. Restore reflective surfaces to their original condition.

j. Remove debris and surface dust from limited access spaces, including roofs, gutters, downspouts, plenums, shafts, trenches, equipment vaults, manholes, attics, and similar spaces.

k. Sweep concrete floors broom clean in unoccupied spaces.

l. Clean transparent materials, including mirrors and glass in doors and windows. Remove glazing compounds and other noticeable, vision-obscuring materials. Replace chipped or broken glass and other damaged transparent materials. Polish mirrors and glass, taking care not to scratch surfaces.

m. Remove labels that are not permanent.

n. Touch up and otherwise repair and restore marred, exposed finishes and surfaces. Replace finishes and surfaces that cannot be satisfactorily repaired or restored or that already show evidence of repair or restoration.

o. Do not paint over "UL" and similar labels, including mechanical and electrical nameplates.

p. Wipe surfaces of mechanical and electrical equipment, and similar equipment. Remove excess lubrication, paint and mortar droppings, and other foreign substances.

q. Replace parts subject to unusual operating conditions.

C. Comply with safety standards for cleaning. Do not burn waste materials. Do not bury debris or excess materials on Owner's property. Do not discharge volatile, harmful, or dangerous materials into drainage systems. Coordinate with Owner for management of waste onsite.

END OF SECTION

SECTION 01730

EXECUTION REQUIREMENTS

PART 1 - GENERAL

1.1 SUMMARY

A. This Section includes general procedural requirements governing execution of the Work including, but not limited to, the following:
   1. General installation of products.
   2. Coordination of Owner-installed products, if applicable.
   3. Progress cleaning.
   4. Starting and adjusting.
   5. Protection of installed construction.

PART 2 - PRODUCTS (NOT USED)

PART 3 - EXECUTION

3.1 PREPARATION

A. Existing Utility Information: Furnish information to local utility that is necessary to adjust, move, or relocate existing utility structures, utility poles, lines, services, or other utility appurtenances located in or affected by construction. Coordinate with authorities having jurisdiction.

B. Existing Utility Interruptions: Do not interrupt utilities serving facilities occupied by Owner or others unless permitted under the following conditions and then only after arranging to provide temporary utility services according to requirements indicated:
   1. Notify Engineer not less than two days in advance of proposed utility interruptions.
   2. Do not proceed with utility interruptions without Engineer's written permission.

C. Field Measurements: Take field measurements as required to fit the Work properly. Recheck measurements before installing each product. Where portions of the Work are indicated to fit to other construction, verify dimensions of other construction by field measurements before fabrication. Coordinate fabrication schedule with construction progress to avoid delaying the Work.

D. Space Requirements: Verify space requirements and dimensions of items shown diagrammatically on Drawings.

3.2 INSTALLATION

A. General: Locate the Work and components of the Work accurately, in correct alignment and elevation, as indicated.
   1. Make vertical work plumb and make horizontal work level.
   2. Where space is limited, install components to maximize space available for maintenance and ease of removal for replacement.

B. Comply with manufacturer's written instructions and recommendations for installing products in applications indicated.

C. Install products at the time and under conditions that will ensure the best possible results. Maintain conditions required for product performance until Substantial Completion.

D. Conduct construction operations so no part of the Work is subjected to damaging operations or loading in excess of that expected during normal conditions of occupancy.

E. Tools and Equipment: Do not use tools or equipment that produce harmful noise levels.

F. Anchors and Fasteners: Provide anchors and fasteners as required to anchor each component securely in place, accurately located and aligned with other portions of the Work.

G. Hazardous Materials: Use products, cleaners, and installation materials that are not considered hazardous.

3.3 PROGRESS CLEANING

A. General: Clean Project site and work areas daily, including common areas. Remove and properly dispose of excess material accumulated from demolition and construction (such as piles of gravel or soil, broken concrete, debris, papers, rejected materials, worn-out equipment parts, etc.) from the project site at the Contractor's expense. Coordinate progress cleaning for joint-use areas where more than one installer has worked. Enforce requirements strictly. Dispose of materials lawfully.
   1. Comply with requirements in NFPA 241 for removal of combustible waste materials and debris.
   2. Do not hold materials more than 7 days during normal weather or 3 days if the temperature is expected to rise above 80 deg F (27 deg C).
   3. Containerize hazardous and unsanitary waste materials separately from other waste. Mark containers appropriately and dispose of legally, according to regulations.

B. Site: Maintain Project site free of waste materials and debris.

C. Work Areas: Clean areas where work is in progress to the level of cleanliness necessary for proper execution of the Work.
   1. Remove liquid spills promptly.

D. Installed Work: Keep installed work clean. Clean installed surfaces according to written instructions of manufacturer or fabricator of product installed, using only cleaning materials specifically recommended. If specific cleaning materials are not recommended,

use cleaning materials that are not hazardous to health or property and that will not damage exposed surfaces.

E. Concealed Spaces: Remove debris from concealed spaces before enclosing the space.

F. Exposed Surfaces: Clean exposed surfaces and protect as necessary to ensure freedom from damage and deterioration at time of Substantial Completion.

G. Cutting and Patching: Clean areas and spaces where cutting and patching are performed. Completely remove paint, mortar, oils, putty, and similar materials.
   1. Thoroughly clean piping, conduit, and similar features before applying paint or other finishing materials. Restore damaged pipe covering to its original condition.

H. Waste Disposal: Burying or burning waste materials on-site is not be permitted. Washing waste materials down sewers or into waterways is not be permitted. Trash and debris may be disposed of onsite in the Owner's waste transfer facility. Coordinate with Owner.

I. During handling and installation, clean and protect construction in progress and adjoining materials already in place. Apply protective covering where required to ensure protection from damage or deterioration at Substantial Completion.

J. Clean and provide maintenance on completed construction as frequently as necessary through the remainder of the construction period. Adjust and lubricate operable components to ensure operability without damaging effects.

K. Limiting Exposures: Supervise construction operations to assure that no part of the construction, completed or in progress, is subject to harmful, dangerous, damaging, or otherwise deleterious exposure during the construction period.

3.4 PROTECTION OF INSTALLED CONSTRUCTION

A. Provide final protection and maintain conditions that ensure installed Work is without damage or deterioration at time of Substantial Completion.

END OF SECTION

SECTION 01800

EQUIPMENT TESTING AND SYSTEM STARTUP

PART 1 - GENERAL

1.1 SUMMARY

A. This section provides the requirements for equipment testing and system startup.

1.2 DEFINITIONS

A. Functional Test: Test or tests in presence of Engineer an/Owner to demonstrate that installed equipment meets manufacturer's installation, calibration, and adjustment requirements and other requirements as specified.

B. Performance Test: Test or tests performed after any required functional test in presence of Engineer an owner to demonstrate and confirm individual equipment meets performance requirements specified in individual specification sections.

C. Unit Process: As used in this section, a unit process is a portion of the facility that performs a specific process function.

D. System Performance Demonstration:
   1. A demonstration, conducted by Contractor, to demonstrate and document the performance of the operating system, both manually and automatically (if required), based on criteria developed in conjunction with Owner and as accepted by Engineer.
   2. Such demonstration is for the purposes of (i) verifying to Owner system performs as a whole, and (ii) documenting performance characteristics of completed system Owner's records. Neither the demonstration nor the evaluation is intended in any way to make performance of a unit process or the responsibility of Contractor, unless such performance is otherwise specified.

1.3 SUBMITTALS

A. Informational Submittals:
   1. System Startup and Performance Demonstration Plan.
   2. Functional and performance test results.
   3. Completed Unit Process Startup Form for each unit process.
   4. Completed system Performance Demonstration/Certification Form.

1.4 STARTUP AND PERFORMANCE DEMONSTRATION PLAN

A. Develop a written plan, in conjunction with Owner's operations personnel, to include the following:

1. Step-by-step instructions for startup of each unit process and the complete system.
2. Unit Process Startup Form (sample attached), to minimally include the following:
   a. Description of the unit process, including equipment numbers/ nomenclature of each item of equipment and all included devices.
   b. Detailed procedure for startup of the unit process, including valves to be opened/closed, order of equipment startup, etc.
   c. Startup requirements for each unit process, including water, power, chemicals, etc.
   d. Space for evaluation comments.
3. Performance Demonstration/Certification Form (sample attached), to minimally include the following:
   a. Description of unit processes included in the system startup.
   b. Sequence of unit process startup to achieve system startup.
   c. Description of computerized operations, if any, included in the facility.
   d. Contractor certification capable is capable of performing its intended function(s), including fully automatic operation.
   e. Signature spaces for Contractor and Owner.

PART 2 - PRODUCTS (NOT USED)

PART 3 - EXECUTION

3.1 GENERAL

A. Startup Meeting(s): Meeting(s) to discuss test schedule, test methods, materials, chemicals and liquids required, facilities operations interface, and Owner involvement.

B. Contractor’s Testing and Startup Representative:
   1. Designate and furnish one or more personnel to coordinate and expedite testing and system startup.
   2. Representative(s) shall be present during startup meetings and shall be available at all times during testing and startup.

C. Provide temporary valves, gauges, piping, test equipment, and other materials and equipment required for testing and startup.

D. Provide Subcontractor(s) and equipment supplier's staff adequate to prevent delays. Schedule ongoing work so as not to interfere with or delay testing and startup.

3.2 EQUIPMENT TESTING

A. Preparation:
   1. Complete installation of all equipment before testing.
   2. Furnish qualified supplier representatives.
   3. Equipment Test Report Form: Provide written test report for each item of equipment to be tested, to include the minimum information:
      a. Owner/Project Name.
      b. Equipment or item tested.

c. Date and time of test.
d. Type of test performed (Functional or Performance).
e. Test method.
f. Test conditions.
g. Test results.
h. Signature spaced for Contractor and Owner as witness.

4. Cleaning and Checking: Prior to beginning functional testing:
   a. Calibrate testing equipment in accordance with manufacturer’s instructions.
   b. Inspect and clean equipment, devices, connected piping, and structures to ensure they are free of foreign material.
   c. Lubricate equipment in accordance with manufacturer's instructions.
   d. Turn rotating equipment by hand when possible to confirm that equipment is not bound.
   e. Open and close valves by hand and operate other devices to check for binding, interference, or improper functioning.
   f. Check power supply to electric-powered equipment for correct voltage.
   g. Adjust clearances and torque.
   h. Test piping for leaks.
5. Ready-to-test determination will be by Owner based at least on the following:
   a. Acceptable Operation and Maintenance Data.
   b. Notification by Contractor of equipment readiness for testing.
   c. Adequate completion of Work adjacent to, or interfacing with equipment to be tested.
   d. Availability and acceptability of suppliers to assist in testing of respective equipment.
   e. Equipment tagging complete.
   f. Delivery of all spare parts and special tools.

B. Functional Testing:
1. Notify Owner and Engineer in writing at least 10 calendar days prior to scheduled date of testing.
2. Prepare Equipment Test Report summarizing test method and results.
3. When in Owner’s and Engineer’s opinion, equipment meets functional requirements specified, such equipment will be accepted for purposes of advancing to performance testing phase. Such acceptance will be evidenced by Engineer’s or Owner’s signature as witness to Equipment Test Report.

C. Performance Testing:
1. Notify Engineer and Owner in writing at least 10 calendar days prior to scheduled date of test.
2. Performance testing shall not commence until equipment has been accepted by Engineer and Owner as having satisfied functional test requirement specified.
3. Type of fluid, gas, or solid for testing shall be as specified.
4. Furnish labor, materials, and supplies for conducting the test and taking samples and performance measurements.
5. Prepare Equipment Test Report summarizing test method and results.
6. When, in Engineer’s or Owner’s, such equipment will be accepted as to conforming to Contract requirements. Such acceptance will be evidenced by Owner’s signature on Equipment Test Report.

3.3 STARTUP OF UNIT PROCESSES

A. Prior to unit process startup, equipment within unit process shall be accepted by Engineer or Owner as having met functional and performance testing requirements as specified.

B. Startup sequencing of unit processes shall be as chosen by Contractor to meet schedule requirements.

C. Make adjustments, repairs, and corrections necessary to complete unit process startup.

D. Startup shall be considered complete when, in opinion Owner or Engineer, unit process has operated in manner without significant interruption. This period is in addition to functional or performance test periods specified elsewhere.

E. Significant Interruption: May include any of the following events:
   1. Failure of Contractor to provide and maintain qualified onsite startup personnel as scheduled.
   2. Failure to meet specified functional operation.
   3. Failure of any critical equipment or unit process that is not satisfactorily corrected.
   4. Failure of any noncritical equipment or unit process that is not satisfactorily corrected.
   5. As determined by Engineer.

F. A significant interruption will require startup then in progress to be stopped. After corrections are made, startup test period to start from beginning again.

3.4 FACILITY PERFORMANCE DEMONSTRATION

A. When, in the opinion of Owner or Engineer, startup of all unit processes has been achieved, sequence each\unit process to the point that entire system is operational.

B. Demonstrate proper operation of required interfaces within and between individual unit processes.

C. After facility is operating, complete performance testing of equipment and systems not previously tested.

D. Document, as defined in System Startup and Performance Demonstration Plan, the performance of the facility.

E. Certify, on the System Performance Demonstration/Certification Form, that facility is capable of performing its intended function(s), including fully automatic operation.

3.5 SUPPLEMENTS

A. Supplements listed below, following "End of Section," are a part of this Specification:
   1. Unit Process Startup Form.
   2. System Performance Demonstration/Certification Form.

END OF SECTION

UNIT PROCESS STARTUP FORM

OWNER:_____ PROJECT:_____

Unit Process Description: (include description and equipment number of all equipment and devices):

_____

_____

_____

_____

Startup Procedure (describe procedure for sequential startup and evaluation, including valves to be opened/closed, order of equipment startup, etc.):

_____

_____

_____

_____

Startup Requirements (water, power, chemicals, etc.): _____

_____

_____

Evaluation Comments: _____

_____

_____

SYSTEM PERFORMANCE DEMONSTRATION/CERTIFICATION FORM

OWNER:_____ PROJECT: _____

Unit Process Description: (list unit processes involved in startup):

_____

_____

_____

_____

Unit Process Startup Sequence (describe sequence for startup, including computerized operations, if any):

_____

_____

_____

_____

Contractor Certification that Facility is capable of performing its intended function(s), including fully automatic operation:

Contractor:_____ Date_____, 20____

Owner :_____ Date_____, 20____
Authorized Signature

DIVISION 2

SITE CONSTRUCTION

SECTION 02221

TRENCHING

PART 1 - GENERAL

1.1 SUMMARY

A. This Section includes the following:
   1. Trench excavation.
   2. Bracing, shoring, and trench protection.
   3. Trench stabilization.
   4. Trench fill and backfill.
   5. Contractor's CQC.

1.2 DEFINITIONS

A. General: Refer to Section 02300, Earthwork.

B. Bedding Material: Granular material upon which pipes are placed. Minimum bedding depth as shown on the Drawings.

C. Pipe Zone: Backfill zone that includes the full trench width and extends from the prepared trench bottom to an upper limit above the outside surface of pipe as shown on the Drawing.

D. Prepared Trench Bottom: Graded trench bottom after excavation and installation of stabilization material, if required, but before installation of pipe bedding material.

E. Trench Stabilization Material: Backfill material to stabilization the trench bottom if it is not stable.

1.3 SUBMITTALS

A. Action Submittals:
   1. Samples, product information, and datasheets for all specified equipment and products herein and shown on the Drawings.

B. Informational Submittals:
   1. Material Test Reports: Certified test reports from a qualified testing agency for compliance with the specifications.

PART 2 - PRODUCTS

2.1 GENERAL

A. Materials from Trench Excavation:

1. Backfill material obtained from trench excavations must be free of cinders, ash, refuse, organic or frozen material, boulders, or other deleterious materials to be reused as trench backfill.

B. Imported Backfill Material:
1. Imported backfill material is from source(s) outside the project limits and is used when, in the opinion of the Engineer, an adequate volume of suitable backfill material is not available within the project limits.

2.2 PIPE BEDDING AND PIPE ZONE MATERIALS

A. Imported material that is unfrozen and friable, with no clay balls, roots, or other organic matter, trash, cinders or other deleterious materials.

B. Crushed stone within maximum particle size and other requirements as follows:
1. Pipes under 18-inches diameter: 3/4-inch maximum particle size.
2. Pipes greater than 18-inches: 1-1/2-inch maximum particle size.
3. Perforated pipe: Drain Gravel (as shown and specified)
4. Self-compacting materials.

2.3 GEOTEXTILE

A. Refer to Section 02300, Earthwork.

2.4 SELECT EARTHFILL

A. Refer to Section 02300, Earthwork.

2.5 DETECTABLE BURIED WARNING TAPE

A. Detectable buried warning tape is to have a minimum 3-inch width and 5 mil thickness and a solid aluminum core running the full length and width of the tape enclosed in a color coded inert plastic jacket, impervious to alkalis, chemical reagents and solvents in the soil. Tin or nickel-coated joining clips furnished by the tape manufacturer. The tape shall meet APWA/ULCC Color Code requirements.

2.6 TRENCH STABILIZATION MATERIAL

A. Imported material that is unfrozen and friable, with no clay balls, roots, or other organic matter, trash, cinders or other deleterious materials.

B. Crushed stone within maximum particle size of 3-inches, uniformly graded from coarse to fine, and less than 8 percent by weight passing the 1/4-inch sieve.

PART 3 - EXECUTION

3.1 PROTECTION OF EXISTING PROPERTIES

A. General:

1. Take precautions to protect all adjoining private and public property and facilities, including underground and overhead utilities, curbs, sidewalks, driveways, structures, and fences. Restore or replace all disturbed or damaged facilities to its original conditions at Contractor's expense.
2. Perform utility locates by a professional company (Call 811) before digging. Provide minimum 2 business days' advanced notice. Coordinate with Owner for known buried utilities.
3. Protect utilities exposed during the work and prevent damaging underground utilities adjacent to excavations. Immediately notify the utility owner of any construction damage. Repairs of damage to marked utilities are at the expense of the Contractor.
4. Relocate existing utilities where and if shown on the plans that conflict with new pipelines or structures.
5. Cut and replace existing service lines interfering with trenching operations only with the Engineer's permission and at the Contractor's expense.
6. Protect existing water and sewer mains and water and sewer services from freezing at all times during construction.

B. Existing Structures

1. Prevent damage to existing buildings or structures in the work area. Repair all construction related damage to the satisfaction of the Owner.

C. Existing Overhead Utilities

1. Use extreme caution to avoid conflict, contact or damage to overhead utilities during the work.

D. Maintenance of Flows

1. Maintain the flow of sewers, drains and water courses encountered during construction. Restore culverts, ditches, fences, crosswalks and structures disturbed by construction to their original condition upon completion of the work.

3.2 TRENCH EXCAVATION

A. General

1. Excavate at the specified locations for pipeline installations and appurtenant structures.
2. During excavation, stockpile backfill materials away from the trench banks to assure trench wall stability. Stockpile excavated materials on only one side of the trench without obstructing existing fire hydrants, valves, manholes and other appurtenances. Assure surface drainage of adjoining areas is unobstructed.
3. Remove and dispose of all excess or unsuitable excavated materials.
4. Prevent surface water from flowing into excavations. Promptly remove all water accumulating in trench excavations. Do not permit water to accumulate in any open trench. Remove and re-lay all pipe out of alignment or grade caused by trench flooding.

5. Grade the trench bottoms to the specified lines and grades. Assure bedding material provides uniform bearing and support for each pipe section along its entire length. Excavate for bell and joints after the trench bedding is graded, limiting the excavation to the required length, depth and width needed.
6. The use of trench digging machinery is permitted, except in places where its operation is likely to cause damage to existing structures or features, in which case hand methods are to be employed.
7. Perform the work so that trenches will remain open the minimum time required to accomplish the work.
8. Do not begin trench excavating until appropriate backfill materials, piping, and compaction equipment are onsite.

B. Trench Dimensions
1. Excavate to the trench dimensions specified below.
2. Width:
   a. Excavate to provide room to install and join the pipe. The minimum trench width is the pipe O.D. plus 18 inches, or 24 inches, whichever is greater.
3. Depth:
   a. Excavate the trench as required for the invert grade or pipe bury as shown on the plans, plus 4 inches for pipe bedding. If bedrock, boulders or large stones are encountered at the bottom of the trench, excavate at least 6 inches below the bottom and install pipe bedding.
4. Trench Bottom:
   a. Firm Subgrade: Grade with hand tools, remove loose and disturbed material, and trim off high areas and ridges left by excavating bucket teeth. Allow space for pipe bedding. Confirm that subgrade is firm and unyielding.
   b. Soft or Unsuitable Subgrade: When soft or unstable material is encountered at the trench bottom that will not uniformly support the pipe, excavate the material to the depth directed by the Engineer and backfill to trench subgrade elevation with trench stabilization material.
5. Water Control:
   a. Promptly remove and dispose of water entering the trench as necessary to for a prepared trench bottom. Do not lay pipe in water. Dewater as necessary, as specified in Section 02300, EARTHWORK.
   b. Divert surface water from draining into trenches.
   c. Remove water in a manner that limits soil erosion from the trench sides and bottom.
   d. Provide continuous water control during trenching.

C. Trenching Safety and Protection
1. Provide all shoring, bracing and tight sheeting required to prevent caving and protect workers at all times, meeting current Occupational Safety and Health Act Requirements, and to protect adjacent property and structures. The stability of construction excavations and associated worker safety, including slope geometry and shoring/bracing considerations, are the responsibility of the Contractor. Meet current OSHA regulations. This may require design of temporary slopes and or shoring by a licensed professional engineer at the cost of the Contractor. The cost of this shall be included in the cost for trench excavation.

3.3 TRENCH FILLING AND BACKFILLING

A. General

1. Backfill all trenches as specified immediately after grade, alignment, and pipe jointing has been inspected and approved by the Engineer. Conduct any pipe testing as specified before completing filling and backfilling. Correct all defects discovered by tests prior to completing backfilling.
2. Refer to Section 02300, Earthwork for compaction density requirements.

B. Trench Stabilization Material Placement, if required

1. Furnish imported trench stabilization material as specified.
2. Place over the full width and depths of trench in maximum 6-inch lifts.
3. Check grade and correct general irregularities in material for ease of placement of overlying bedding material.

C. Pipe Bedding Placement

1. Furnish imported bedding material as specified.
2. Place over the full width and depths of trench in maximum 6-inch lift. Hand-grade and compact to provide a firm and unyielding subgrade.
3. Check grade and correct irregularities in bedding material. Loosen top 1 inches to 2 inches of compacting bedding by rake to provide a cushion before laying pipe.
4. Couplings/Joints: Carefully excavate into bedding at each joint to allow for proper assembly and inspection of joint and uniform bearing along the barrel of the pipe. Provide concrete bedding under large buried features and assemblies.

D. Backfill Placement in Pipe Zone

1. After the pipe bedding material is placed, place the pipe zone material.
2. Restrain pipe as necessary to prevent movement under backfilling operations.
3. Place material simultaneously in lifts on both sides of pipe, and, if applicable, between pipes installed in the same trench.
4. The first lift shall be no more than 1/2-pipe diameter, but never more than 6 inches. Each successive lift shall be no more than 6 inches.
5. Thoroughly tamp each lift on sides and under haunches by “walking in” and working material under haunches with a shovel compacted as specified and backfill the trench.
6. After the full depth of the pipe zone material has been specified, compact the material by a minimum of three passes of a vibratory plate compactor. Do not use power-driven impact compactors, or bucket compacting techniques to compact the pipe zone material.

E. Detectable Buried Warning Tape

1. Continuously install marking tape along the centerline of all buried pipe on top of the pipe zone as shown on the plans.

F. Backfill Placement Above Pipe Zone:

1. After the pipe zone material is placed, place select backfill material above pipe zone.
2. Adjust moisture content to meet the specified compaction.
3. Do not allow the backfill material to free fall into the trench until at least 2 feet of material is placed in this zone.
4. Backfill to grade allowing for surface finishes, gravel, pavement, topsoil, etc.

G. Watering

1. Apply uncontaminated water, when required, at the locations and in the amounts required to compact the backfill material to the specified requirements. Maintain an adequate water supply during the work. Assure the equipment used for watering is of the capacity and design to provide uniform water application.
2. Apply water during the work to control dust and to maintain all embankment and base courses in a damp.

3.4 CONTRACTOR'S CQC

A. General:

1. Notify Engineer when trench excavations have reached required grade.
2. Notify Engineer when trench bottom and alignment is ready for inspection.
3. Notify Engineer when pipe is ready for backfilling, and whenever backfilling operations are resumed after a period of inactivity.
4. Notify Engineer when soft or loose materials are encountered.
5. Notify Engineer when fill material appears to be deviating from Specifications.
6. Geotechnical Testing Agency Qualifications: An independent testing agency qualified to conduct soil materials and rock-definition testing.
7. Provide adequate survey control to avoid overexcavation.

B. Source Testing:

1. As necessary to locate acceptable sources if imported material, minimum of one gradation test per imported material type, and additional index testing as required by Engineer to assure material meets the specifications.
2. During production of imported material, test each granular material on a frequency of one gradation test per 1,000 cubic yards. Provide additional index testing to confirm material meets specifications, as required by Engineer.

C. Field Testing:

1. Compaction (Density) Testing:
   a. Modified proctor laboratory density curves (5-point minimum) shall be submitted by Contractor for each material type in accordance with ASTM D1557. Samples of materials may be required, as requested by Engineer.
   b. Testing agency shall test in-place densities of soils and structural materials per ASTM D6938. Tests shall be performed at one per 100 linear feet of trench per lift:

END OF SECTION

SECTION 02232

SITE PREPARATION

PART 1 - GENERAL

1.1 SUMMARY

A. This Section includes the following:
1. Protecting existing trees and vegetation to remain.
2. Removing trees and other vegetation, where required and approved by Owner.
3. Clearing and grubbing.
4. Topsoil stripping.
5. Removing above-grade site improvements.
6. Disconnecting, capping or sealing, and abandoning site utilities in place.
7. Disconnecting, capping or sealing, and removing site utilities.
8. Demolition.

1.2 DEFINITIONS

A. Demolition: Dismantling, removing, destroying, or wrecking of any fixed building or structure, or any part thereof.

B. Salvage/Salvageable: Remove and deliver, to specified location(s), the equipment, building, building materials, or other items so identified to be saved from construction, damage, or waste; such property is to remain that of the Owner.

C. Topsoil: Natural or cultivated surface-soil layer containing organic matter and sand, silt, and clay particles; friable, pervious, and black or a darker shade of brown, gray, or red than underlying subsoil; reasonably free of subsoil, clay lumps, gravel, and other objects more than 2 inches (50 mm) in diameter; and free of weeds, roots, and other deleterious materials.

1.3 MATERIALS OWNERSHIP

A. Except for materials indicated to be stockpiled or to remain Owner's property, such as salvaged items, cleared materials shall become Contractor's property and shall be removed from the site.

1.4 SUBMITTALS

A. Informational Submittals:
1. Photographs, sufficiently detailed, of existing site conditions of trees and plantings, adjoining construction, and site improvements that might be misconstrued as damage caused by site clearing.
2. Demolition plan, if requested by Engineer.

1.5 REGULATORY AND SAFETY

A. When applicable, demolition Work shall be accomplished in strict accordance with 29 CFR 1926 Subpart T.

B. Comply with all federal, state and local hauling and disposal regulations.

C. Improvements on Adjoining Property: Work on adjoining properties is not included in the scope of this project.

D. Salvageable Improvements: Carefully remove items indicated to be salvaged and store on Owner's premises where indicated.

E. Notify utility locator service for area where Project is located before site clearing.

PART 2 - PRODUCTS (NOT USED)

PART 3 - EXECUTION

3.1 SITE PREPARATION

A. Protect and maintain benchmarks and survey control points from disturbance during construction.

B. Provide erosion-control measures to prevent soil erosion and discharge of soil-bearing water runoff or airborne dust to adjacent properties and walkways. Plan shall follow any permitting requirements that are applicable.

C. Locate and clearly flag trees and vegetation to remain or to be relocated. Coordinate with Owner.

D. Protect existing site improvements to remain from damage during construction.
   1. Restore damaged improvements to their original condition, as acceptable to Owner.

3.2 TREE PROTECTION

A. Erect and maintain a temporary fence around drip line of individual trees or around perimeter drip line of groups of trees to remain. Remove fence when construction is complete.
   1. Do not store construction materials, debris, or excavated material within drip line of remaining trees.
   2. Do not permit vehicles, equipment, or foot traffic within drip line of remaining trees.

B. Do not excavate within drip line of trees, unless otherwise indicated.

C. Where excavation for new construction is required within drip line of trees, hand clear and excavate to minimize damage to root systems. Use narrow-tine spading forks, comb soil to expose roots, and cleanly cut roots as close to excavation as possible.
   1. Cover exposed roots with burlap and water regularly.
   2. Temporarily support and protect roots from damage until they are permanently relocated and covered with soil.
   3. Coat cut faces of roots more than 1-1/2 inches (38 mm) in diameter with an emulsified asphalt or other approved coating formulated for use on damaged plant tissues.
   4. Cover exposed roots with wet burlap to prevent roots from drying out. Backfill with soil as soon as possible.

D. Repair or replace trees and vegetation indicated to remain that are damaged by construction operations, in a manner approved by Engineer.
   1. Employ a qualified arborist, licensed in jurisdiction where Project is located, to submit details of proposed repairs and to repair damage to trees and shrubs.
   2. Replace trees that cannot be repaired and restored to full-growth status, as determined by the qualified arborist.

3.3 UTILITIES

A. Contractor shall arrange with utility company, as coordinated with Owner, for disconnecting and sealing indicated utilities that serve existing structures before site clearing.
   1. Verify that utilities have been disconnected and capped before proceeding with site clearing.

B. Locate, identify, disconnect, and seal or cap off utilities indicated to be removed.
   1. Arrange to shut off indicated utilities with utility companies.

C. Existing Utilities: Do not interrupt utilities serving facilities occupied by Owner or others unless permitted under the following conditions and then only after arranging to provide temporary utility services according to requirements indicated:
   1. Notify Engineer and Owner not less than two weeks in advance of proposed utility interruptions.
   2. Do not proceed with utility interruptions without Owner's permission.

D. Excavate for and remove underground utilities indicated to be removed only after proper utility locates have been done by Contractor.

3.4 EXISTING FACILITIES TO BE DEMOLISHED

A. General areas as shown on the plans.

3.5 CLEARING AND GRUBBING

A. Remove obstructions, trees, shrubs, grass, and other vegetation to permit installation of new construction. Removal includes digging out stumps and obstructions and grubbing roots.
   1. Do not remove trees, shrubs, and other vegetation indicated to remain or to be relocated.
   2. Cut minor roots and branches of trees indicated to remain in a clean and careful manner where such roots and branches obstruct installation of new construction.
   3. Completely remove stumps, roots, obstructions, and debris extending to a depth of 18 inches (450 mm) below exposed subgrade.
   4. Use only hand methods for grubbing within drip line of remaining trees.

B. Fill depressions caused by clearing and grubbing operations with satisfactory soil material, unless further excavation or earthwork is indicated.
   1. Place fill material in horizontal layers not exceeding 8-inch (200-mm) loose depth, and compact each layer to a density equal to adjacent original ground.

3.6 TOPSOIL STRIPPING

A. Remove sod and grass before stripping topsoil.

B. Strip topsoil to whatever depths are encountered in a manner to prevent intermingling with underlying subsoil or other waste materials.
   1. Strip surface soil of unsuitable topsoil, including trash, debris, weeds, roots, and other waste materials.

C. Stockpile topsoil materials away from edge of excavations without intermixing with subsoil. Grade and shape stockpiles to drain surface water.
   1. Do not stockpile topsoil within drip line of remaining trees.
   2. Dispose of excess topsoil as specified for waste material disposal.
   3. Stockpile surplus topsoil and allow for respreading deeper topsoil.

3.7 SITE IMPROVEMENTS

A. Remove existing above- and below-grade improvements as indicated and as necessary to facilitate new construction.

B. Remove slabs, paving, curbs, gutters, and aggregate base as indicated.
   1. Unless existing full-depth joints coincide with line of demolition, neatly saw-cut length of existing pavement to remain before removing existing pavement. Saw-cut faces vertically.

3.8 DISPOSAL

A. Disposal: Remove surplus soil material, unsuitable topsoil, obstructions, demolished materials, and waste materials, and legally dispose of them offsite. Trash and debris may be disposed of onsite in the Owner's waste transfer facility. Coordinate with Owner.

3.9 CONTRACTOR'S CQC

A. General:
1. Provide adequate survey control to avoid over clearing and site disturbance.
2. Notify Engineer when site clearing operations are started.
3. Notify Engineer before any trees or substantial bushes are scheduled to be removed.
4. Minimize clearing areas to the extent possible. Clear only those areas that are needed as work is sequenced to help avoid unnecessary runoff and erosion.

END OF SECTION

SECTION 02300

EARTHWORK

PART 1 - GENERAL

1.1 SUMMARY

A. This Section includes the following:

1. Preparing subgrades.
2. Dewatering.
3. Excavating and backfilling for structures (other than tanks).
4. Structural Fill for slabs-on-grade.
5. Excavating and backfilling.
6. Aggregate bases and surfacing.
7. Soil stabilization.
8. Contractor's CQC.

B. Refer to Geotechnical Findings and Recommendation Letter (Attachment B). Where in conflict or not consistent, the Geotechnical letter and Geotechnical Engineer's direction and recommendations take precedence over this specification.

1.2 DEFINITIONS

A. Borrow Soil: Satisfactory soil imported from designated borrow areas on or near Site for use as fill or backfill.

B. Completed Course: A course or layer that is ready for next layer or next phase of Work.

C. Completed Lift: Compacted with uniform cross-section thickness.

D. Drainage Course: Course supporting the slab-on-grade that also minimizes upward capillary flow of pore water.

E. Excavation: Removal of material encountered above subgrade elevations and to lines and dimensions indicated.

1. Authorized Additional Excavation: Excavation below subgrade elevations or beyond indicated lines and dimensions as directed by Geotechnical Engineer. Authorized additional excavation and replacement material will be paid for according to Section 01275 "Measurement and Payment or Contract provisions for changes in the Work.
2. Unauthorized Excavation: Excavation below subgrade elevations or beyond indicated lines and dimensions without direction by Geotechnical Engineer. Unauthorized excavation, as well as remedial work directed by Geotechnical Engineer, shall be without additional compensation.

F. Fill: Soil materials used to raise existing grades.

G. General Excavation: Excavation is unclassified. Also known as "common Excavation".

H. Geotechnical Engineer: Owner's Geotechnical Engineer or designated representative. Refer to the Geotechnical Findings and Recommendations Letter (Attachment B).

I. Geosynthetic: Geotextiles or geogrids.

J. Imported Materials: Materials obtained from sources offsite, suitable for specified use.

K. Lift: Loose (uncompacted) layer of material placed in consistent effort (without delay or work stoppage).

L. Maintenance Period: Begin maintenance period of stabilized areas immediately after each area is planted and continue for 8 weeks after all plantings and seedings are completed.

M. Optimum Moisture Content: Determined in accordance with ASTM Standard specified to determine maximum dry density for relative compaction.

N. Prepared Ground Surface: Ground surface after completion of clearing and grubbing, topsoil stripping, excavation to grade, aeration, inspection of surface suitability, and compaction of subgrade as necessary.

O. Relative Compaction: Ratio, in percent, of as-compacted field dry density to laboratory maximum dry density as determined in accordance with ASTM D1557. Apply corrections for oversize material to either as-compacted field dry density or maximum dry density as determined by the Geotechnical Engineer.

P. Rock: Rock material in beds, ledges, unstratified masses, conglomerate deposits, and boulders of rock material 1 cubic yard or more in volume that exceed a standard penetration resistance of 100 blows/2 inches when tested by an independent geotechnical testing agency, according to ASTM D1586. Excavation in rock is considered classified excavation, or "rock excavation" and will be paid separately from general (common) excavation.

Q. Satisfactory Stand: Grass areas planted for stabilization with no bare spots larger than 1 square foot, and no more than 2 percent of the area with bare spots in total.

R. Structures: Buildings, footings, foundations, retaining walls, slabs, tanks, curbs, mechanical and electrical appurtenances, or other man-made stationary features constructed above or below the ground surface.

S. Subgrade: Surface or elevation remaining after completing excavation, or top surface of a fill or backfill immediately below subbase, drainage fill, or topsoil materials.

T. Standard Specifications: When referenced herein, shall mean the Washington State Department of Transportation (WSDOT) Standard Specifications for Road, Bridge, and Municipal Construction, most current version and applicable amendments.

U. Utilities: On-site underground pipes, conduits, ducts, and cables, as well as underground services within buildings.

1.3 SUBMITTALS

A. Action Submittals:
1. Samples, product information, and datasheets for all specified equipment and products herein and shown on the plans.

B. Informational Submittals:
1. Material Test Reports: Certified test reports from a qualified testing agency for compliance with the specifications.

1.4 WEATHER LIMITATIONS

A. Excavation: Material excavated when frozen or when air temperature is less than 32 degrees Fahrenheit shall not be used as fill or backfill material until material completely thaws. Material excavated during inclement weather shall not be used for fill or backfill until after material drains and dries sufficiently for proper compaction.

B. Subgrade Preparation: Prepare subgrade when unfrozen and free of ice and snow.

PART 2 - PRODUCTS

2.1 GENERAL

A. General: Provide borrow soil or imported materials when sufficient satisfactory soil materials are not available from excavations.

2.2 GENERAL BACKFILL

A. Excavated soil material from required excavations free from rocks larger than 1 inch, and free from clay balls, roots and other organic matter, ashes, cinders, trash, debris, and other deleterious materials.

B. Refer to the Geotechnical Findings and Recommendations Letter (Attachment B) for suitable general backfill material. Import material, if required, shall meet the requirements of general backfill if used for this purpose. Coordinate with Geotechnical Engineer.

2.3 CRUSHED ROCK PRODUCTS

A. General: Imported products from approved and tested sources.

B. Structural Fill: Naturally or artificially graded mixture of natural or crushed gravel and/or stone.

C. Bedding Course: Naturally or artificially graded mixture of natural or crushed gravel, crushed stone, and natural or crushed sand; ASTM D2940; except with 100 percent passing a 1-inch (25-mm) sieve and not more than 8 percent passing a No. 200 (0.075-mm) sieve.

D. Sand: ASTM C33; fine aggregate, natural, or manufactured sand.

E. Crushed Aggregate/Crushed Stone:

1. Crushed Surfacing Top Course (CSTC) meeting WSDOT standard specifications for use as structural base and road surfacing.
2. Shotrock material for use as structural subbase.
3. Supplied by Owner and delivered to the site. Contractor to assume it is stockpiled within near the project work area for use.

2.4 SPECIALTY BACKFILL FOR UNDERGROUND STORAGE TANKS

A. Refer to the tank manufacturer's installation instructions for acceptable materials.

2.5 MATERIAL SOURCING

A. General:
1. Perform tests necessary to locate acceptable source materials meeting specified requirements.
2. Final approval of material shall follow Contractor's CQC testing requirements to demonstrate compliance with the specifications.

2.6 GEOTEXTILE

A. Separation (Filter) Geotextile: Nonwoven pervious sheet of polyester, polypropylene, polyethylene, or polyamide fibers orientated into a stable network, and shall conform to the following physical properties:

Physical Strength Properties (Separation Geotextile)		
Property	**Physical Requirements**	**Test Method**
Mass (Weight), oz./sq.yd, min	6.0	ASTM D5261
Water Permittivity, sec-1, min	1.5	ASTM D4491 (Falling Head)
Apparent Opening Size (AOS), U.S	70 Max/100 min	ASTM D4751
Grab Tensile Strength, lbs., min	140	ASTM D4632
Grab Elongation, %min	50	ASTM D4682
Mullen Burst Strength, psi, min	210	ASTM D3786
Puncture Strength, lbs., min	75	ASTM D4833
Trapezoid Tear Strength, lbs., min	65	ASTM 4533

2.7 COMPACTION EQUIPMENT

A. Compaction equipment shall be of suitable type and adequate to obtained the specified densities, and shall provide satisfactory breakdown of materials to form a dense and unyielding fill.

B. Compaction equipment shall be operated in strict accordance with the manufacturer's instructions. Equipment shall be in good condition to meet the manufacturer's rated compaction effort. If inadequate densities are obtained, larger and/or different type(s) of equipment shall be provided by Contractor. Any hand-operated equipment shall also be capable of meeting the specified densities.

2.8 WATER FOR MOISTURE CONDITIONING

A. Free from hazardous or toxic contaminants, or contaminants deleterious to achieving proper compaction.

2.9 SOIL STABILIZATION MATERIALS

A. TOPSOIL
1. Organic-laden soil free from rocks, stones, large woody debris, or other deleterious materials that is suitable to sustain vegetative growth.
2. Provide a minimum of 6 inches of topsoil in all areas that require vegetative restoration.

B. FERTILZER
1. Commercial, uniform in composition, free flowing, suitable for application with equipment designed for that purpose.
2. Fertilizer shall be compatible with seed mix, area, and climate as recommended by the professional applicator.

C. SEED
1. Fresh, clean new-crop seed that complies with the tolerance for purity and germination established by the Official Seed Analysts of North America.
2. Mix design for natural grasses and vegetation in the area, free from noxious weeds, as recommended by the professional applicator.

D. MULCH
1. Specially processed wood fiber containing no growth or germination inhibiting factors.
2. Dyed a suitable color to allow for inspection of coverage for material placement.
3. Manufactured such that after addition of water and agitation in slurry tanks with water, the material fibers will become uniformly suspended to form a homogenous slurry.
4. When sprayed on ground, material will allow absorption and percolation of moisture.

E. TACKIFIER
1. Derived from natural organic plant sources containing no growth or germination-inhibiting materials.
2. Capable of hydrating water, and readily blend with slurry materials.

PART 3 - EXECUTION

3.1 PROTECTION OF EXISTING PROPERTIES

A. General: Refer to Section 01730, Execution Requirements.

3.2 GENERAL EARTHWORK

A. Protect structures, utilities, sidewalks, pavements, and other facilities from damage caused by settlement, lateral movement, undermining, washout, and other hazards created by earthwork operations.

B. Protect and maintain all erosion and sedimentation controls during all earthwork operations.

C. Perform utility locates by a professional company (Call 811) before digging. Provide minimum 2 business days' advanced notice. Coordinate with Owner for known buried utilities.

D. Provide protective insulating materials to protect subgrades and foundation soils against freezing temperatures or frost.

E. Stockpile borrow soil materials and excavated satisfactory soil materials without intermixing. Place, grade, and shape stockpiles to drain surface water. Cover to prevent windblown dust.
   1. Stockpile soil materials away from edge of excavations. Do not store within drip line of remaining trees.

F. When testing reports that subgrades, fills, or backfills have not achieved degree of compaction specified, scarify and moisten or aerate, or remove and replace soil to depth required; recompact and retest until specified compaction is obtained.

G. Disposal of surplus materials: Remove surplus satisfactory soil and waste material, including unsatisfactory soil, trash, and debris. Coordinate with Owner for locations of material disposal where applicable onsite.

H. Explosives: Do not use explosives. Explosives are not permitted.

3.3 SUBGRADE PREPARATION

A. Keep subgrade free of water, debris, and foreign matter during compaction or proof-rolling.

B. Bring subgrade to proper grade and cross section. Perform excavation with smooth-blade equipment to prevent excessive disturbance.

C. Preparation of subgrade for earthwork operations including removal of vegetation, topsoil, debris, obstructions, and deleterious materials from ground surface is specified in Section 02232, Site Preparation.

D. In areas with excessive moisture, allow subgrade to aerate and dry for 3 to 5 days prior to inspection of subgrade suitability.

E. Native subgrade with a pocket penetrometer measurement of 2 tons per square foot or greater is suitable subgrade for material placement as a field check. Material shall also be field density tested to ensure that it meets minimum compaction requirements before building on or filling over.

F. Do not use sections of prepared ground surface as haul roads. Protect prepared subgrade from traffic.

G. Maintain prepared ground surface in finished condition until course is placed.

H. Compaction Requirements:
   1. Refer to Contractor's CQC section for testing frequency.
   2. Under general areas: Compact to 95 percent relative compaction in accordance with ASTM D1557.
   3. Under pavement, floor slabs on-grade, granular structural fill under structures: Compact to 95 percent relative compaction in accordance with ASTM D1557.

I. Correction:
   1. Wet Subgrade: Aerate material by blading, discing, harrowing, or other method to hasten drying process.
   2. Soft or Loose Subgrade: Adjust moisture content and recompact as specified, or sub-excavate and replace with suitable material from the excavation.
   3. Unsuitable Material: Sub-excavate and replace with suitable material.
   4. Coordinate with Geotechnical Engineer.

J. If Geotechnical Engineer determines that unsatisfactory soil is present, continue excavation and replace with compacted backfill or fill material as directed.

K. Proof-roll subgrade below the building slabs and pavements with heavy pneumatic-tired equipment to identify soft pockets and areas of excess yielding. Do not proof-roll wet or saturated subgrades.
   1. Completely proof-roll subgrade in one direction, repeating proof-rolling in direction perpendicular to first direction. Limit vehicle speed to 3 mph.
   2. Proof-roll with a loaded 10-wheel, tandem-axle dump truck weighing not less than 15 tons.
   3. Excavate soft spots, unsatisfactory soils, and areas of excessive pumping or rutting, as determined by the Geotechnical Engineer, and replace with compacted backfill or fill as directed.

L. Reconstruct subgrades damaged by freezing temperatures, frost, rain, accumulated water, or construction activities, as directed by the Geotechnical Engineer, without additional compensation.

3.4 STRUCTURAL FILL

A. Compact in maximum 8-inch loose lifts to 95 percent relative compaction in accordance with ASTM D1557.

3.5 DEWATERING

A. Prevent surface water and groundwater from entering excavations, from ponding on prepared subgrades, and from flooding Project site and surrounding area.

B. Protect subgrades from softening, undermining, washout, and damage by rain or water accumulation.
   1. Reroute surface water runoff away from excavated areas. Do not allow water to accumulate in excavations. Do not use excavated trenches as temporary drainage ditches.
   2. If required, install a dewatering system to keep subgrades dry and convey ground water away from excavations. Maintain until dewatering is no longer required.

C. Obtain a discharge permit for waste disposal from authorities have jurisdiction, where applicable. Treat water collected by dewatering operations as required by regulatory agencies prior to discharge. Discharge water as required by permit and in manner that will not cause erosion or flooding, or otherwise damage existing facilities, completed Work, impact performance of existing facilities, or adjacent property. Remove solids from treatment facilities on a regular basis and perform other maintenance as necessary to maintain their efficiency.

3.6 EXCAVATION

A. Excavate to lines, grades, and dimensions shown and as necessary to accomplish Work. Excavate to within tolerances of plus or minus 0.1 foot, except where dimensions or grades are shown or specified as maximum or minimum. Allow for forms, working space, granular base, topsoil, and similar items, wherever applicable. Trim to neat lines where concrete is deposited against earth.

B. Construction vibrations, seepage, or surface loading can cause excavation to slough or cave. Use care in performing construction activities near open excavations.

C. Unclassified Excavation: Excavate to subgrade elevations regardless of the character of surface and subsurface conditions encountered. Unclassified excavated materials may include soil materials and obstructions. No changes in the Contract Sum or the Contract Time will be authorized regardless of the character of surface and subsurface conditions encountered.
   1. If excavated materials intended for fill and backfill include unsatisfactory soil materials and rock, replace with satisfactory soil materials.
   2. If rock is encountered within excavations, cease work in the area where rock is discovered until a time and materials change order for the extra work can be agreed upon by the Contractor, Owner and Engineer. The work in the affected area will again proceed after a change order is processed, and no shutdown time or associated additional costs will be awarded other than those agreed upon in the change order.

D. Excavation for structures:
   1. Excavate to indicated elevations and dimensions within a tolerance of plus or minus 0.5 inch. If applicable, extend excavations a sufficient distance from structures for placing and removing concrete formwork, for installing services and other construction, and for inspections.

a. Excavations for Footings and Foundations: Do not disturb bottom of excavation. Excavate by hand to final grade just before placing concrete reinforcement. Trim bottoms to required lines and grades to leave solid base to receive other work.

b. Excavation for Underground Tanks, Basins, and Mechanical or Electrical Utility Structures: Excavate to elevations and dimensions indicated within a tolerance of plus or minus 0.5 inch. Do not disturb bottom of excavations intended as bearing surfaces.

E. Unauthorized Excavation:

1. Fill unauthorized excavation under foundations or wall footings by extending bottom elevation of concrete foundation or footing to excavation bottom, without altering top elevation. Lean concrete fill, with 28-day compressive strength of 2500 psi, may be used when approved by Engineer.

a. Fill unauthorized excavations under other construction or utility pipe as directed by the Geotechnical Engineer.

3.7 GEOTEXTILE

A. General:

1. The geotextile fabric shall be placed in a manner and at locations shown in the plans.
2. At the time of installation, the fabric shall be rejected if it has any defects, rips, holes, flaws, deterioration, or damage caused by manufacturing, transportation, storage, or placement. Visual inspection of the fabric shall be performed once the fabric has been placed and before the placement of any overlying materials.
3. Fabric shall be placed with machine direction (long dimensions) in-line with the pipe alignment.
4. Protect the material from contamination by surface water and sediment.
5. Do not operate machinery directly on the geotextile. When placing material over seams, place in direction of shingling.
6. Longitudinal seams shall be overlapped a minimum of 12 inches. Shingle in direction of pipe alignment.
7. Repair or replace damaged geotextile. If repairing, place a patch of undamaged over damaged area at least 18 inches in all directions beyond damaged area. Remove all interfering material. Secure patch with heat fusion tacking, or by other means approved by Engineer.

3.8 FILL AND BACKFILL

A. Place soil fill on subgrades free of mud, frost, snow, or ice.

B. Plow, scarify, bench, or break up sloped surfaces steeper than 1 vertical to 4 horizontal so fill material will bond with existing material.

C. Place and compact backfill in excavations promptly, but not before completing the following:

1. Construction below finish grade including, where applicable, sub-drainage, damp proofing, waterproofing, and perimeter insulation.
2. Surveying locations of underground utilities for Record Documents.
3. Testing and inspecting underground utilities.

4. Removing concrete formwork.
5. Removing trash and debris.
6. Removing temporary shoring and bracing, and sheeting.
7. Installing permanent or temporary horizontal bracing on horizontally supported walls.

D. Place and compact backfill material in layers to required elevations as follows:
1. Under grass and planted areas, use satisfactory soil material.
2. Under steps and ramps, use Structural Fill.
3. Under buildings and slabs, use Structural Fill.
4. Under footings and foundations, use Structural Fill.
5. Under and adjacent to retaining walls, use Structural Fill.
6. In utility trenches within 5 feet of any retaining wall or foundation, use Structural Fill.

E. Compaction of Fills and Backfills:

1. Place backfill and fill soil materials in layers not more than 8 inches in loose depth for material compacted by heavy compaction equipment, and not more than 4 inches in loose depth for material compacted by hand-operated tampers.
2. Place backfill and fill soil materials evenly on all sides of structures to required elevations, and uniformly along the full length of each structure.
3. Where backfill is to extend higher on one side than on the other, as indicated on the Plans, structural floor beams or other means of restraint shall be installed before such backfill is placed. Should any deflection of the foundation wall result from the Contractor's failure to provide adequate bracing, the Contractor shall remove the backfill or embankment to relieve the deflection, properly brace the wall, and replace the backfill at no additional cost to the Owner.

F. Compact soil materials to not less than the following percentages of maximum dry unit weight per ASTM D1557:
1. Under structures, building slabs and steps, scarify and recompact top 12 inches of existing subgrade and each layer of backfill or fill soil material at 95 percent.
2. Under unpaved areas, scarify and recompact top 6 inches below subgrade and compact each layer of backfill or fill soil material at 95 percent.

3.9 SOIL MOISTURE CONTROL

A. Uniformly moisten or aerate subgrade and each subsequent fill or backfill soil layer before compaction to within acceptable percentage window of optimum moisture as required by Geotechnical Engineer.
1. Do not place backfill or fill soil material on surfaces that are muddy, frozen, or contain frost or ice.
2. Remove and replace, or scarify and air dry otherwise satisfactory soil material that exceeds optimum moisture content window and is too wet to compact to specified dry unit weight.

3.10 GRADING

A. General: Uniformly grade areas to a smooth surface, free of irregular surface changes. Comply with compaction requirements and grade to cross sections, lines, and elevations indicated.
1. Provide a smooth transition between adjacent existing grades and new grades.

2. Cut out soft spots, fill low spots, and trim high spots to comply with required surface tolerances. Slope grades to direct water away from buildings and to prevent ponding. Finish subgrades to required elevations within the following tolerances:
3. Unpaved Areas: Plus or minus 1 inch.
4. Grading inside Structure Lines: Finish subgrade to a tolerance of 1/2 inch when tested with a 10-foot straightedge.

3.11 SOIL STABILIZATION

A. Maintenance: Perform during the maintenance period:
1. Watering: Water as needed to maintain plant life during dry periods.
2. Washouts: Repair by filling in with topsoil, fertilizing, seeding, mulching, and matting, if required to re-stabilize.

B. Soil Preparation
1. Provide 6 inches of topsoil from approved source. Track-walk material into place.
2. Before start of hydroseeding, and after surface has been shaped and graded, and only lightly compacted to uniform grade and thickness, scarify the topsoil surface to a minimum 1 inch.

C. Hydroseeding:
1. After soil preparation, apply hydroseed. The application rate shall be set by a commercial hydroseed applicator that can guarantee a satisfactory stand.
2. Seeding shall not be done during windy weather conditions or when the ground is frozen, excessively wet, or otherwise unsuitable. Seed shall be sown by an approved hydroseeder that uses water as the carrying agent and maintains continuous agitation through paddle blades. It shall have an operating capacity sufficient to agitate, suspend, and mix into a homogenous slurry for the specified application.
3. Distribution lines and nozzle shall be adequately sized to prevent clogging and uniformly apply the slurry.

D. Stabilization all areas with hydroseed application not scheduled to receive another surface treatment. Use other features and products to assist in stabilization of areas until vegetation growth has been established.

3.12 PROTECTION

A. Protecting Graded Areas: Protect newly graded areas from traffic, freezing, and erosion. Keep free of trash and debris.

B. Repair and reestablish grades to specified tolerances where completed or partially completed surfaces become eroded, rutted, settled, or where they lose compaction due to subsequent construction operations or weather conditions.
1. Scarify or remove and replace soil material to depth as directed by the Geotechnical Engineer; reshape and recompact.

C. Where settling occurs before Project correction period elapses, remove finished surfacing, backfill with additional soil material, compact, and reconstruct surfacing.

1. Restore appearance, quality, and condition of finished surfacing to match adjacent work, and eliminate evidence of restoration to greatest extent possible.

3.13 CONTRACTOR'S CQC

A. General:
1. Notify Geotechnical Engineer when excavations have reached required subgrade.
2. Notify Geotechnical Engineer when subgrade is ready for inspection or compaction, or whenever compaction is resumed after a period of extended activity.
3. Notify Geotechnical Engineer when structure is ready for backfilling, and whenever backfilling operations are resumed after a period of inactivity.
4. Notify Geotechnical Engineer when soft or loose materials are encountered, and wherever embankment or site fill is to be placed.
5. Notify Geotechnical Engineer when fill material appears to be deviating from Specifications.
6. Notify Geotechnical Engineer when areas are dressed and ready to receive hydroseed.
7. Geotechnical Testing Agency Qualifications: An independent testing agency qualified to conduct soil materials and rock-definition testing.
8. Provide adequate survey control to avoid overexcavation.
9. Maintain planted areas through the maintenance period and until a satisfactory stand of vegetation is established.

B. Source Testing:
1. As necessary to locate acceptable sources if imported material, minimum of one gradation test per imported material type, and additional index testing as required by Geotechnical Engineer to assure material meets the specifications.
2. During production of imported material, test each granular material on a frequency of one gradation test per 1,000 cubic yards. Provide additional index testing to confirm material meets specifications, as required by Geotechnical Engineer.

C. Field Testing:
1. Compaction (Density) Testing:
   a. Modified proctor laboratory density curves (5-point minimum) shall be submitted by Contractor for each material type in accordance with ASTM D1557. Samples of materials may be required, as requested by Geotechnical Engineer.
   b. Testing agency shall test in-place densities of soils and structural materials per ASTM D6938. Tests shall be performed at the following locations and frequencies:
      1) Structural Slab/Tank Areas: At subgrade and each compacted lift, one test per 250 sq. ft, but no less than 3 tests per lift or layer.
      2) General Site/Yard Area: At subgrade and each compacted lift, at least one test for each 1,000 sq. ft., but no less than 3 tests.

END OF SECTION

SECTION 02644

HDPE EMBEDMENT LINER

PART 1 - GENERAL

1.1 SUMMARY

A. This Section includes the high-density polyethylene (HDPE) concrete embedment liner for double-containment of the contact water evaporation basin.

1.2 SUBMITTALS

A. Action Submittals:
1. Manufacturer's specifications, product information and datasheets, and all products proposed for use to complete the installation.
2. Polymer Resin: Product identification and supplier.
3. Panel Layout Plan with proposed size, number, position and sequence, and location of all field seams.
4. Proposed equipment for material placement and welding
5. Proposed procedures for material installation.

B. Informational Submittals:
1. Certificates of qualification for liner manufacturer and supplier/installer.
2. Production dates for liner.
3. Testing: Factory QC test results for supplied liner.
4. Certified field seam test results
5. Geomembrane Installer's Certificate of Concrete Forming and Placing for embedment of wall liner and Geomembrane Installer's Certificate of Substrate for acceptance of placing the floor liner.
6. Special guarantee.

1.3 QUALIFICATIONS

A. HDPE Liner Manufacturer:
1. The manufacturer of the liner material described in these specifications shall have successfully manufactured a minimum of one million square feet of the proposed material.

B. HDPE Liner Supplier/Installer:
1. Minimum 10 years' in the industry installing geomembrane liners, authorized installer by the manufacturer, and at least 3 projects installing a similar liner product that is proposed.

1.4 SEQUENCING AND SCHEDULING

A. Factory test results for supplied liner and all associated equipment and materials shall be approved by Engineer prior to shipment to the project site.

B. Preinstallation meeting has been conducted to the satisfaction of the Engineer.

C. Before placing liner in form work or on substrate, get written approval and liner installer's certification and approval of acceptance.

D. Do not attach profiles or PE sheet strips to concrete until the concrete has achieved necessary strength and surface acceptance as specified in Division 3.

1.5 PREINSTALLATION MEETING

A. Meet 5 calendar days minimum prior to commencing the installation of the HDPE liner.

B. Attendees shall have representatives from the following parties:
   1. Contractor.
   2. HDPE liner supplier/installer.
   3. Owner.
   4. Engineer.

C. Topics to include:
   1. Specifications and drawings.
   2. Submittal status and installation schedule.
   3. Installation approach and procedures.
   4. Acceptance of formwork and substrate.
   5. Installation crew size and qualifications.

1.6 SPECIAL GUARANTEE

A. Provide manufacturer's extended warranty, with Owner named as beneficiary, in writing, as a special guarantee. The warranty shall provide for correction, or at the option of Owner, removal and replacement of Work specified herein that is found to be defective during the periods listed below, commencing on the Substantial Completion date. Duties and obligations are as specified in the General Conditions.
   1. Guarantee liner against manufacturer's defects, deterioration due to ozone, ultraviolet, and other exposure elements for a period of 20 years, on a pro-rata basis.
   2. Guarantee liner against defects in material and factory seams, where applicable, for a period of 2 years.
   3. Guarantee liner against defects resulting from installation for a period of 2 years.

1.7 WEATHER LIMITATIONS

A. Do not install liner or perform seaming under the following conditions:
   1. Air temperature is less than 35 degrees F or more than 90 degrees F.
   2. Relative humidity is greater than 90%.
   3. Raining, snowing, frost on the ground, or excessive wind.

1.8 DELIVERY, STORAGE, AND HANDLING

1. Storage and handling of the products shall conform to the manufacturer's recommendations and shall be done in such a manner as to prevent damage.
2. Rolls or sheets of liner shall arrive to the project site in manufacturer’s packaging (PE-wrapped).
3. Contractor shall provide onsite storage to protect all products and supplies. Any portion of the material that is damaged shall either be repaired or cut out as determined by the Engineer and/or manufacturer's representative, at no additional cost to the Owner.

PART 2 - PRODUCTS

2.1 CONCRETE PROTECTIVE LINER

A. Composition: High Density Polyethylene (HDPE), containing no plastizers, fillers, extruders, reclaimed polymers, or chemical additives other than the standard materials and additives commonly used in manufacturing of such product using a minimum of 97%-98% virgin product.

B. Include with the shipped liner all certified factory test results to confirm that the liner and all liner materials are manufactured in accordance with the manufacturer’s quality assurance and as specified herein.

C. Liner anchors shall be minimum 13 mm stud height and extruded with the sheet as a one step process.

D. All installation materials shall all be provided by the liner manufacturer, including tear-off profiles, end profiles, corner profiles, extrudate for extrusion welding (seaming), and all other materials and supplies.

E. Produced in accordance with the Geosynthetics Research Institute Standards GM-13. Certified results of factory quality assurance testing shall be submitted to the Engineer prior to delivery of the product to the site.

F. Furnish in panels of single-ply with no factory seams; Thickness: 5 mm (200 mil); Color: Black; Pre-Approved Manufacturer: AGRU Sure-Grip®.

G. Meet manufacturer’s most recent published specifications and the following minimum values:

Property	**Test Method**	**Required Value**
Thickness, min (mil)	ASTM D5199	190 mil
Density, min	ASTM D1505	0.94 g/cc
Tensile Properties	ASTM D6693, Type IV	
Strength at Yield (min. ave.)	2 in/min	440 lbs./in.
Elongation at Break (min. ave.)	(5 specimens each direction)	300%
Puncture Resistance	ASTM D4833	300 lbs.
Pull Out Resistance	ISO 4624	16,500 psf

H. Liner materials shall be fabricated in accordance with approved manufacturer’s standard factory quality assurance testing program, as accepted by Engineer.

2.2 GROUT

1. The grout for the floor liner installation shall be non-shrinking, maximum elasticity, flowable, long-working time and free of gas generating additives.
2. Mix ratio, stone sizes, and water-cement ratio shall be coordinated between the grout manufacturer and the liner installer.

2.3 GROUT MORTAR

1. The grout mortar to repair hollow spots found in the floor after grout injection shall be a polyester concrete (<5 dm3), or a grout with a minimum of 11,600 psi compressive strength and less than 1.2% shrinkage may be used.

2.4 BOOTS (PENETRATIONS)

1. Materials shall be fabricated of the same material as the liner to fit penetrations cleanly and tightly, without folds, stretching or unsupported areas.
2. Use liner manufacturer supplied wall bracket.

PART 3 - EXECUTION

3.1 GENERAL

A. All Work for and in connection with the installation of the liner, field seaming, joint welding, and testing shall be done in strict conformation with the manufacturer's instructions and industry best practice. Only certified professionals shall be allowed to perform such Work.

B. Substrate Preparation/Certification: The geomembrane installer shall, prior to commencing installation, certify in writing that the substrate surface on which the liner is to be placed is acceptable.

C. Preparation and placement of the liner in the form work shall be done carefully, and witnessed and approved by the liner installer.

D. No seaming shall take place unless all environmental requirements are satisfied.

E. Liner panels shall be in of factory, virgin condition. No reuse of materials or remnants from another project shall be used on this project.

F. Full panels shall be used where possible to reduce field seams to the extent possible.

G. Take extreme caution during installation of the liner system. Smoking is prohibited at the site. Handling and installation procedures shall be performed by workers wearing smooth-soled, clean boots. No equipment or traffic is allowed on the liner. No gasoline, generators or chemicals are allowed to be placed on the liner.

H. Under no circumstances shall the liner be used as a working or staging area. If needed for installation of the liner, a protective liner sheet shall be used for staging materials for the work at-hand.

3.2 WALL LINER INSTALLATION

A. A cast form system with no or minimal braces shall be used to minimize the number of penetrations in the liner.

B. Mount the liner to the wooden forms after they are erected using the profiles. Use wire nails (typically used for roofing applications with heads having a minimum diameter of 5-6 mm) in areas where extrusion welding seams (butt seams) are required to assure penetrations caused by the nails are later covered and sealed by seaming.

C. Where tear-off profiles are used, nail the profiles without puncturing the liners. Secure the liners together on each side of the profile using wire loops on every sixth row of studs. The distance between two rows of studs at the joints shall not exceed 1.5 times the standard row distance.

D. Thermal expansion shall be considered by nailing the liners only at the bottom edges and partially at the side edges.

E. Hang the liner from the top edge of the forms using wires loops with the edge profiles.

F. Carefully and in witness of the liner installer, install the outer formwork and concrete rebar after the wall liner system has been set.

G. After concrete placement, carefully remove the formwork to be witnessed by the liner installer.

3.3 FLOOR LINER INSTALLATION

A. The floor liner shall be installed using the Grout Injection Method.

B. After the bottom concrete (foundation) has been placed, cured, and cleaned, the floor shall be wetted or an adhesive coating applied, per manufacturer's instructions to assure proper bonding between the foundation and the grout.

C. The field size for which the grout is injected successfully depends on the flow-ability of the grout. Either conduct tests or otherwise prove to Engineer by case study and experience of the area and flow-ability of the grout to be used to make sure that all voids will be filled by grout injection techniques.

D. Install profiles or PE sheet strips at each liner butt joint. Secure the profiles or PE sheet strips to the existing concrete substrate without damaging or cracking the substrate. Secure the liner at each joint to the profiles or PE strips by countersinking the fasteners. Install one fastener on each side of the joint (two across from each other) spaced close enough to the butt edge of the liners for a single pass of the extrusion welder. Space the set of fasteners 18 inches on center. Extrusion weld all joints and seam test.

E. Similarly, install profiles or PE sheet strips along the perimeter of the structure abutting them to the wall liner. Secure the profile or PE sheet strip in the same manner as the butt end joints of the sheet and fillet extrusion weld floor liner to the wall liner.

F. Install the injection and aeration ports in the liner, limiting the size and number to reduce the number of liner penetrations that will need to be patched later.

G. Uniformly load the floor using water to achieve the necessary ballast to secure the liner during the grout injection step.

H. Once the grout injection process is completed and grout has cured, remove the water ballast, let dry, and re-inspect all joints. Carefully tap and step on all areas of the liner checking for hollow spots (areas where the grout injection did not penetrate). If a hollow spot is found, repair the area as specified herein.

3.4 FILLING HOLLOW SPOTS

A. If hollow spots are found by means of tapping the floor lining system, install two ports on each side of the area to be repaired.

B. After the hollow area is filled with grout mortar, the pipes shall be removed and the liner penetrations patched.

C. Patch the liner using smooth liner pieces of the same thickness and properties of the main liner material. Extrusion weld to the patch liner piece to the main liner at each injection port hole.

3.5 FIELD SEAMING

A. Field seam all joints fillets and patches using an extrusion welding machine. Machine shall be in good working order and demonstrated to function as intended. Meet all weather limitations.

B. Insert a copper wire for spark testing prior to welding. Position the wire in the center of the seams within 1/8-inch of sheet edge, and with provisions for electrical grounding to test equipment.

C. Chamfer ends of butt joints or intersection joints to allow for extrusion welding strip seal. Clean all surfaces and ready for extrusion welding.

D. Seal small holes and defects with extrudate, as approved by Engineer.

3.6 REPAIRS

A. All seams which fail testing shall be repaired. All defects, holes, blisters, scuffs, or other signs of damage shall also be repaired. Repairs shall be conducted in the presence of the Engineer. Every repair shall be re-tested.

B. Fill small holes and defects the size of ¼” or smaller with extrudate. Fill thoroughly, make smooth, and clean as approved by Engineer.

C. Holes larger than ¼” shall be patched. Patch material shall be smooth liner of the same thickness and material as the main liner.

D. Patch shall be neat in appearance and of size 6 inches larger in all directions than the area to be repaired. Round corners of patch to minimum 1-inch radius.

3.7 CLEANUP

A. Clean up work areas as Work proceeds. Take particular care to assure that no trash, tools, and other unwanted materials and equipment are left on liner or trapped under the liner. Make sure all scraps, filings, and other debris is cleaned up as the work progresses.

3.8 CONTRACTOR'S CQC

A. Coordinate with Owner's CQA Plan.

B. Prior to starting liner installation and daily thereafter, liner installer shall certify in duplicate that substrate surfaces for which liner will be placed or formwork is compliant with best practices and liner has not been damaged.

C. Field Seaming Equipment:
   1. Verify that the welders and seaming equipment is functioning satisfactorily.
   2. Produce test seam samples at the beginning of each shift for each seaming crew.
   3. In addition, if seaming has been suspended for longer than ½-hour, if breakdown of seaming equipment occurs, if a different welder is used or operator, produce test seams and spark test in the presence of Engineer prior to resuming operations.

D. Log each seam test with the date, time, seam identifier, weather conditions, name of individual that performed the test, name(s) of individuals that witnessed the test, test method, and any issues or failures.

E. In-place Observation:
   1. Visually inspect each liner sheet/panel, seams, repairs, defects as installation progresses and again at completion.
   2. Test each seam using a spark testing device.
   3. Perform all testing in presence of Engineer.

F. Field Testing Equipment:
   1. High Voltage Spark Detector: Tinker and Roser Holiday Detector Model AP-W, set at 20,000 volts, or approved equal.

G. Field Seam Testing (Nondestructive Testing):
   1. Use standard calibration techniques to assure proper operation of the equipment.
   2. Pass spark detector unit along entire length of all extrusion welded seams where copper wire had been inserted prior to seaming.
   3. Presence of a visible spark along tested seam is evidence Continuously test all seamed joints and penetrations with the spark detector unit.
   4. Mark all faulty areas for repair and retesting.

H. Hydrostatic Leak Testing of Completed Lined Concrete Basin:
   1. Preparation:
      1) Interior of basin shall be free of all foreign matter prior to conducting test.
   b. Procedure:
      1) Plug all pipe inlets and outlets with suitable plugs. Brace plugs securely.
      2) Add clean water to within 2 inches of the top of the basin (but below the liner top edge termination).

3) Cover the basin with the basin cover, remove cover, and check water level after 24 hours.
4) For an acceptable test, there shall be no change in water level over the test period. Remove water and discharge in a controlled manner limiting erosion and ditch overtopping as approved by the Owner.
5) If test fails, make repairs and repeat test.

I. Documentation:
1. Record documents shall include the following:
a. Panel and sheet numbers.
b. Acceptance/approval of formwork and substrate from liner installer.
c. Day of liner panel installation/forming and pouring.
d. Seaming equipment used and name of certified (approved) welder personnel.
e. Grout, pressure, ballast, etc. for floor liner installation.
f. Date seamed. Name of all witness(es)
g. Identity and location of each repair, and repair logs.

END OF SECTION

SECTION 02665

PIPES, VALVES AND APPERTUNANCES

PART 1 - GENERAL

1.1 SUMMARY

A. This Section includes the following:
   1. High Density Polyethylene (HDPE) Pipe and Fittings
   2. Stainless Steel (SST) Pipe
   3. Valves
   4. Piping appurtenances
   5. Pipe Cleaning and Disinfection

1.2 SUBMITTALS

A. Action Submittals:
   1. Product information, shop drawings of pre-assembled/shop fabricated sections, and datasheets for all specified equipment and products.
   2. Testing Work Plan(s):
      a. Piping section(s) to be tested, proposed dates, method of isolation, method of conveying water to the source for testing, test pressure calculation(s), and steps.
   3. Testing Report(s):
      a. Test logs, certificate of calibration of instruments used for testing, testing results and documentation.
   4. Potable Water Disinfection Work Plan.

B. Informational Submittals:
   1. Certificates of qualification for pipe fitters and welders.
   2. Certified test reports from a qualified testing agency for compliance with the specifications.

1.3 QUALIFICATIONS

A. HDPE Pipe Welder:
   1. HDPE pipe thermal fusion welding and installation must be done by a firm or individual(s) having demonstrated satisfactory certification and performance history in the installation of HDPE pipe. If subcontracted, the firm or individual(s) will be responsible to the Contractor for all phases of HDPE pipe installation.
   2. Submit copies of current factory certification(s) for the Contractor, or proposed Subcontractor, for the installation and thermal fusion welding of HDPE pipe in accordance with Code of Federal Regulations (CFR) Title 49 and Part 192.285.
   3. A list of similar work completed by the Contractor, or proposed Subcontractor, within the last 2 years that totals the installation of at least 1 mile of 2 to 6-inch diameter HDPE pipe using thermal fusion welded joints.
   4. The information provided will be evaluated by the Engineer to determine if the experience and qualifications submitted are adequate to perform the work. The Engineer’s interpretation of Contractor or Subcontractor’s ability to perform the work will be final.

B. SST Pipe Fitters and Welders:
   1. Shall be experienced in fabricating fittings of similar diameters and lengths, and wall thicknesses required for the Work.
   2. Shop welders and welding operators in accordance with ASME BPVC SEC IX.
   3. Field welders and operators in accordance with AWS D1.1/D1.IM.

C. Independent Testing Lab (Disinfecting Lines): Certified in the State of Washington, with minimum 10 years' experience in the field of water sampling and testing.

PART 2 - PRODUCTS

2.1 GENERAL

A. Furnish all piping as specified and meeting the materials and testing requirements of this Section. Furnish all fittings and associated appurtenances of the same material and design as specified, unless otherwise specified or shown on the plans.

B. Assure all pipe is clearly marked with type, class and/or thickness as applicable. Assure lettering is legible and permanent under normal handling and storage conditions.

C. Furnish a manufacturer's certification for all pipe and fittings, certifying that the pipe and fittings meet the contract requirements.

D. Use fittings for connecting service lines of the same material, construction, and joint design as the main pipe.

2.2 HDPE PIPE AND FITTINGS

A. Furnish HDPE pipe meeting AWWA C901 or C906 and ASTM D3350, with a material code of PE 3408, a cell classification of 345464C, or with a material code of PE 4710 and a cell classification of 445474C. Assure HDPE pipe is manufactured with an ultraviolet (UV) stabilizer.

B. Furnish pipe with iron pipe size (IPS) outside diameters. Assure dimensions and workmanship meet ASTM F714 requirements for nominal diameters of 4 inches or greater and ASTM D3035 for nominal diameters smaller than 4 inches. All gravity flow HDPE pipes shall have an SDR of 21; all pressure flow HDPE pipes shall have an SDR of 11. See plan sheets for pipe sizes (nominal diameters).

C. Pipe sections, fittings, and flange connections shall be joined by thermal butt-fusion welding of the same type, grade, and class of polyethylene compound and supplied from the same raw material supplier.

D. If perforated HDPE pipe is scheduled for the project, it shall be shop-drilled. Remove all residual cuttings from holes and clean before delivering to project.

E. Fittings shall be molded for 6 inches and smaller and fabricated from polyethylene pipe. Pipe sizes 8 inches and larger shall be shop fabricated. Ends of fabricated fittings shall be pressure rated and match the adjoining pipe section.

F. Flanges and Backup Rings: ASTM A240, Type 304 or 316 stainless steel, ASME B16.1 standard pattern. Flanges shall be complete with one piece, molded polyethylene flange adapters. Flange connection shall have the same or greater pressure rating as the adjoining pipe. Gasket material, size and thickness as recommended by the pipe or flange manufacturer. Bolts, nuts, and washers shall be 316 stainless steel, ASTM A193, Grade B8 hex head bolts; and ASTM A194, Grade 8 hex head nuts. Bolts shall be fabricated in accordance with ASME B18.2.2 and provided with washers of the same material.

G. Electrofusion Couplers: Shall be rigid, straight couplers constructed of injection-molded polyethylene with embedded heat coils. Install at locations only approved by Engineer.

H. Mechanical Joint (MJ) Couplers: As approved by Engineer for use.

I. Wall Anchors: Material shall be the same as the adjoining pipe with an outside diameter 5 inches greater than the adjoining pipe

2.3 STAINLESS STEEL PIPE AND FITTINGS

A. General:
1. Manufacturing of steel pipe and fittings shall be under the direction of one pipe supplier.
2. Responsibility shall include, at a minimum, coordinating work of other suppliers for fittings and appurtenances.
3. Pipe size shall be nominal pipe diameters as shown on the plans.
4. Steel pipe and fittings shall be manufactured, tested and marked to comply with AWWA C200 and any other requirements of these Specifications.
5. Pipe and fittings shall be Type 304 or 316 stainless steel, Schedule 40. Refer to ASTM B36.10M for definitions of wall thickness for standard weight pipe and nominal pipe size.

B. Fabrication:
1. Shop fabricate. No field fabrication will be allowed, unless otherwise approved by the Engineer.
2. Fabricate from materials of straight pipe in conformance with specified requirements and dimensions of AWWA C208, unless otherwise indicated.

C. Joints:
1. Shop welded and fabricated in accordance with AWWA C200.
2. Complete joint penetration (CJP) butt joints shall be used for longitudinal, girth, and spiral welds.
3. Lengths of pipe shall be shop-joined using lap joints.
4. Where approved by Engineer, field welding may be used to a limited extent as possible. Preparation for field welding shall include beveling plain ends as required by AWWA C200 and the Contractor’s welding procedure specifications. Protect factory beveled pipe ends so they are not damaged in transport to the project site.

D. Flanges and Gaskets:
1. Meet the requirements of AWWA C200.

2.4 CONTACT WATER FILL LINE ASSEMBLY

A. Discharge Hose:

1. Discharge Hose shall be made of heavy-duty construction grade flexible EPDM rubber, with a nominal diameter of 2 inches and a minimum pressure rating of 50 psi. Manufacturers and Products: Unisource Manufacturing, Model: 1400-200 Black EPDM with Green Polyethylene Helix, 25 feet

B. Load Line Container:

1. Industrial-grade load line containment system, UV-resistant polyethylene with security lock, 5-gallon capacity, 2-inch stainless steel collar, with sidewinder assembly to drain. Manufacturers and Products: Pollution Control Corp., PCC 301

2.5 CAMLOCK FITTINGS

A. Camlock fittings shall be stainless steel and of the pressure rating, size, and style to attach to the adjoining pipe or hose. Provide shank adapters to connect to hoses and clamp to the hose using commercial-grade stainless steel band clamps. Camlock fittings that connect to valves or piping shall be threaded.

2.6 PIPING INSULATION

A. Coordinate with Owner's electrician for heat tape installation and electrical connection.

B. All above-ground and near ground piping shall be insulated as shown on the Drawings, and shall consist of:

1. Rigid Foam Insulation shall be 1-1/2-inch Dow Chemical Styrofoam machined/supplied by Smock and Schonthaler, or approved equal. The following materials shall be used:

2. Tape: ¾-inch filament tape.

3. Insulation Sealant: Childers CP 70.

4. Jacketing Sealant: Dow silicone No. 795 or Dow Trademate.

5. Banding: ½-inch wide, 0.020-inch thick quick straps.

6. Screws: Type 410 magnetic stainless.

7. Jacketing: 0.016-inch thick stucco embossed aluminum with 1-mil polyethylene-bonded vapor barrier.

8. Packing: Loose fill Owens Corning TIW, or approved equal.

C. Removable Insulation: Valves and other apparatus as shown on the Drawings or as determined by the Engineer as requiring removable insulation shall be insulated with double-sewn pre-engineered shapes constructed in the following fashion:

1. Removable insulation blankets shall be supplied as a finished product not requiring further alteration at the jobsite.

2. The insulation filler shall be Tempmat 100 percent needled mat without binder. Tempmat shall be sewn between two layers of 17 ounces per square yard Teflon-impregnated fiberglass cloth and double sewn with Teflon-treated fiberglass thread, four to eight stitches per inch.

3. Removable insulation adjacent to styrofoam/aluminum jacketing shall have a 6-inch minimum overlap.

4. Make all valve operators accessible without removal of insulation.

5. As an integral part of the blanket, fasteners shall be placed so that a closing seam can be obtained at matting edges as to not leave voids or gaps. Acceptable fasteners include stainless steel lacing anchors (14 gauge) with stainless steel self-locking washers.

2.7 VALVES

A. General:

1. Valves shall include operators, extension stem, operating nut and accessories to allow a complete operation for intended use.
2. Valve shall be suitable for intended service.
3. Valve shall be the same size as the adjoining pipe, unless otherwise specified or shown on the plans.
4. Valve ends to suit adjacent piping.
5. Resilient seated valves shall have no leakage (drip-tight) in either direction at valve rated pressure.
6. Valve shall open by turning clockwise. Use factory mounted operator, actuator, where required, and accessories.
7. Valve parts not lined or coated in contact with contact water (leachate) shall be 304 or 316 stainless steel.

B. Ball Valves:

1. Two-piece standard port National Pipe Thread (NPT) valve with 316 stainless steel ball and stem, and Teflon seats; 2-inch with minimum 50 psi rating.
2. For vertical or horizontal installations.
3. Ends: Threaded (NPT)
4. Manufacturers and Products: Milwaukee Valves Co., Model 22/SS

C. Plug Valves:

1. Ductile iron or cast iron body, eccentric plug, full port for pressure lines and no less than 80% port opening for gravity lines, buried service, non-lubricated, epoxy lined and coated, straight-way rectangular ports, and 2-inch AWWA nut operator for buried service.
2. Class 150 flanged ends.
3. Manufacturer’s and Products: DeZurik.

D. Operators:
   1. General:
      a. Operator force shall be no more than 40 pounds under any operating condition, including initial breakaway.
      b. Operator with self-locking device or equipped with self-locking device.
      c. Position indicator on quarter-turn valves.
   2. Buried Service:
      a. Shall be 2-inch AWWA operating nut. Enclose moving parts of valve and operator in housing to prevent contact with the soil.
      b. Buried valves shall have extension stems, bonnets, and valve boxes. Extension stem shall be provided to within 2 feet of the surface.

E. Accessories:
   1. T-Handled Operating Wrench:
      a. Provide one t-handle operating wrench.
      b. Manufacturers and Products:
         1) Mueller; No. A-24610
         2) Clow No. F-2520.
   2. Valve Box:
      a. Designed for traffic loading, sliding type, with minimum 6-inch diameter shaft.
      b. Box: Cast iron, minimum depth of 9 inches.
      c. Lid: Cast iron minimum three inches, marked CONTACT WATER for contact water system valves, and WATER for the water system valves.
      d. Extension: Cast iron.

2.8 CLEANING AND DISINFECTION OF POTABLE WATER LINES

A. Work Plan: Prepare a work plan describing and illustration the process of cleaning and disinfecting any and all new and impacted potable water lines. Plan shall meet all standard AWWA standards and local health district requirements. Water testing shall be done by a certified laboratory for bacteriological testing and chloride concentrations. Facility shall be free from coliform bacteria. Forward results to Engineer and health district for their acceptance and approval of system.

PART 3 - EXECUTION

3.1 INSTALLATION

A. HDPE Pipe Fittings and Appurtenances:
   1. General:
      a. Fabricate and install polyethylene pipe in strict conformance with ASTM D2774, and pipe manufacturer's recommendations.
   2. Handling of Pipe:
      a. Deliver and distribute all pipe to the site. Load and unload pipe, fittings, and accessories by lifting with hoists or skidding to avoid shock or damage. Do not drop any materials. Do not roll or skid pipe handled on skidways against pipe already on the ground.
      b. In distributing the material at the site of the work, unload each piece opposite or near the place where it is to be laid in the trench. Keep the interior of all pipe and other accessories free from dirt and foreign matter at all times.

c. Repair or replace all damaged pipe at Contractor's expense on the jobsite.

3. Laying Pipe
   a. Lay and maintain all pipe to the specified lines and grades with fittings at the specified locations.
   b. Use tools and equipment suitable for the Work. Carefully lower all pipe and fittings into the trench to prevent damage to the pipe materials and protective coatings and linings. Do not drop or dump any materials into the trench.
   c. Take every precaution to prevent foreign material from entering the pipe while it is being installed. At times when pipe laying is not in progress, close the open ends of the pipe using a plug or other means approved by the Engineer. Clean and remove all sand, gravel, concrete and cement grout that has entered the lines during construction.
   d. Place pipe bedding in the bottom of the trench in accordance with Section 02221, Trenching. Voids may be left in the bedding material to remove pipe slings to allow support along the full length of the pipe barrel.
   e. Join sections of HDPE into continuous lengths above ground. Assure the equipment used to join pipe sections shall be capable of meeting all conditions recommended by the pipe manufacturer, including but not limited to, temperature requirements, alignments, interfacial fusion minimum pressure, and pipe bending.
   f. Cut pipe for inserting fittings in a neat and clean manner without damaging the pipe or coating and leaving a smooth end at right angles to the pipe axis. Do not cut pipe using an oxyacetylene torch.
   g. Tolerances: Install the pipe within ½ inch of the specified alignment and within ¼ inch of the specified grade.
4. Pipe Joining:
   a. Thermally butt-fuse HDPE pipe and fittings per the manufacturer's recommended procedures.
   b. Thoroughly clean all pipe ends prior to fusing to assure no HDPE pieces remain in the pipe. Face the pipe ends to establish clean, parallel mating surfaces. Continue facing until a minimal distance exists between the fixed and movable jaws of the machine and the facer is locked firmly and squarely between the jaws. Provide a perfectly square face, perpendicular to the pipe centerline on each pipe end and with no detectable gap.
   c. Join the pipe ends rapidly, but carefully, with sufficient pressure to mix the pipe materials and form a homogenous joint. Follow manufacturer's recommendations for internal pressure or bead size of molten material.
   d. Hold molten joint immobile under pressure as indicated until cooled adequately to develop strength. Use cooling times established by the pipe manufacturer. Do not apply water, wet cloths, or similar to shorten cool time.
   e. Each fused joint must have a complete double roll-back bead and be inspected by qualified welder.
   f. HDPE pipe and fittings may be joined together through the use of electrofusion couplers or mechanical couplers with the Engineer's approval.
   g. Join HDPE pipe and fittings to other materials with flange adapters with back-up rings, mechanical couplings designed for connecting HDPE pipe and fittings to another material, or mechanical joint adapters. Consult the manufacturer of the joining device for proper installation procedures.
   h. Align and round the pipe profiles with each other to minimize mismatch (high-low) of the pipe walls. Clamping jaws must not be loosened during fusion. Clamp the pipe as close to the joint area as possible to ensure proper pipe alignment.

i. Use heating tool with internal thermometer, assuring heater faces are clean, oil-free, and coated with a nonstick coating as recommended by the manufacturer. Periodically verify the proper surface temperature using a using a pyrometer or surface temperature measuring device. Melt the pipe interfaces until the proper bead size is formed per manufacturer's recommended temperature and bead size, without applying pressure.

5. Mechanical Connections to Valves and Appurtenances:
   a. Use polyethylene flange adapter and thermally butt fuse to ends of each adjoining pipe section. Use backing flange as specified.
   b. Bolt and nut of sufficient length to show a minimum of three complete threads when joint is made and tightened to manufacturer's standard. Re-torque nuts after three hours.
   c. Use gaskets as specified and install in accordance with manufacturer's instructions.
6. Excavate and backfill pipelines meeting the applicable portions of SECTION 02221, Trenching.
7. Saddle/Sidewall Fusion:
   a. Where approved by Engineer, or specifically shown or indicated on the plans.
   b. Remove any dirt or coating that might interfere with the proper installation of the fusion machine.
   c. Install the proper size heater saddle adaptors on the heater plate. Do not over tighten, but ensure that mating surfaces of the heater and adapters are clean and flush. Heat the plates to the temperature specified by the pipe and fitting manufacturer.
   d. Install the saddle fusion machine to the pipe using appropriate tooling and the manufacturer's instructions to straighten and round the pipe. Do not flatten pipe when tightening clamping fixture.
   e. Clean and roughen pipe surface and fitting saddle contour with 50 or 60 grit utility cloth to expose fresh material. Brush away residue with a clean, dry cloth after roughening the surfaces. Do not use sandpaper or other abrasive materials that are likely to leave grit or deposits of other foreign materials on the pipe surface.
   f. Position the fitting on the pipe and place the fitting into the saddle-fitting holding insert. Apply a slight downward force on the fitting and inspect to insure a precise fit to the pipe. Move the fitting away from the pipe, then back to the pipe and inspect again for precise alignment.
   g. Check the heater temperature. Periodically verify the proper surface temperature using a using a pyrometer or surface temperature measuring device. Place the heater tool in position to heat the pipe and fitting surfaces in accordance with the pipe and fitting manufacturers' instructions.
   h. Join the pipe and fitting surfaces with sufficient pressure to mix the pipe materials and form a homogenous joint. Follow manufacturer's recommendations for pressure or bead size of molten material.
   i. Hold molten joint immobile under pressure as indicated in g above until cooled adequately to develop strength. Cooling times shall be established by the pipe manufacturer. Do not subject the joint to any external stresses or apply water, wet cloths, or similar to shorten cool time.
   j. Each joint must be inspected by qualified Contractor personnel.
8. Joining HDPE pipe to other materials:
   a. Flanged Connections for HDPE Pipe
      1) Assure all flange connections made with HDPE pipe include the placement of metal backing as recommended by the HDPE pipe manufacturer.

2) Butt fuse the flange adapter or stub end to the plastic pipe segment. Position the flange face of the adaptor as required so that the back-up ring on the plastic pipe segment can be attached to the metal flange.

3) Snug flanges to be joined prior to bolting. Adjust pipe spool position as required to assure snug fitting prior to bolting. Install and tighten flange bolts in alternating pattern, drawing the metal and plastic flange faces evenly and flat. Do not use the flanges to draw the two pipe sections together.

b. Mechanical Compression Joints for HDPE Pipe:

1) Provide mechanical joints only where specifically called for on the plans, or approved by Engineer.

2) Provide mechanical joints consisting of, at a minimum, a threaded compression nut or a follower and bolt arrangement, an elastomer seal ring, and a stiffener.

3) Insert pipe stiffeners to provide support under the seal ring and gripping ring. Assure stiffener is long enough to prevent collapse of the pipe.

4) Compress the seals by tightening the threaded compression nuts or follower and bolt arrangements. Assure seals are pressure-tight.

5) Each joint must be inspected by qualified Contractor personnel.

B. SST Pipe and Fittings

1. General:

a. Inspect pipes and fittings before installation. Clean all ends thoroughly, remove all foreign matter and dirt inside of pipe.

b. Joints and relate field assembly of fittings shall conform to requirements of straight pipe.

c. Make minor field adjustments by pulling standard joints. Max allowable angle of 75% of the manufacturer's recommendation or angle which results in a 3/4-inch pull out from normal joint closure, whichever is less. Max allowable gap of 1/8-inch between bell and spigot at weld location.

2. Control of Temperature Stresses: control temperature by shading and covering of the joint area as necessary.

3. Welding:

a. Conform to AWS D1.1/D1.1M, AWWA C206, approved welding procedures and referenced welding codes. In case of conflict, AWS D1.1/D1.1M shall govern.

b. Rejected weld defects shall be corrected by repair or redo, and tested until sound weld metal has been deposited in accordance with all appropriate welding code and requirements.

C. Valves

1. General:

a. Install in conformance with the manufacturer's instructions.

b. Flanged Ends: Flanged valve bolt holes shall straddle vertical centerline of pipe.; clean flanged faces, insert gasket and bolts, and tighten nuts progressively and uniformly.

1) Valve Installation and Orientation: Install valves to operate from fully open to fully closed without obstruction.

D. Pipe Insulation:

1. Insulation shall be supplied in two half-sections, each to cover 180 degrees of pipe radially long. Halves shall be applied offset, thus creating staggered joints so that a continuous piece of insulation is created by connecting adjacent pieces to the previous

and successive pieces. All seams of insulation shall be sealed with a 1/8-inch bead of insulation sealant longitudinally and circumferentially applied to the joints prior to mating them. Secure insulation sections by using one and one-half minimum wraps of tape, making certain that no gaps between insulation sections exist.

2. Where it is impossible or unlikely that the rigid Styrofoam can be cut to fit around supports or other obstructions, all voids shall be stuffed with packing. Provide a vapor barrier coating of insulation sealant.
3. Removable insulation shall overlap the rigid pipe insulation sections a minimum of 3 inches on each end.
4. Fittings: All 90 degree elbows, 45 degree elbows, tee's, crosses, etc., shall be insulated with pre-engineered shapes when available, and sealed and secured with the same procedure as described above.

3.2 CLEANING AND DISINFECTING POTABLE WATER LINES

A. Conform to AWWA C651 for pipes and pipelines, except as modified herein.

B. Disinfect items installed or modified under this project, intended to hold, transport, otherwise contact potable water.
   1. Pumps: Use for pipeline cleaning and disinfection.
   2. Pipelines: Disinfect pipelines.
   3. Disinfect all surfaces of materials that will contact finished water, both during and following construction, using one the methods described in AWWA C652 or C653. Take care to avoid recontamination.

C. Prior to disinfection, clean all pipelines of loose and suspended material.

D. Allow fresh water and disinfectant solution to flow into pipe or vessel at measured rate so chlorine-water solution is at specified strength. Do not place concentrated liquid commercial-grade disinfectant in pipeline or other facilities to be disinfected before it is filled with water.

E. Commence disinfecting after completing all pressure testing, performance and functional testing and acceptances of all systems.

F. Procedure:
   1. Disinfection Solution: Minimum free chlorine concentration of 100 ppm.
   2. Application:
      a. Inject disinfecting solution into pump and associated piping, and circulate for a minimum of 3 hours. At the end of the 3-hour period, solution shall have a strength of no less than 50 ppm free chlorine.
      b. Operate valves and pump appurtenances during disinfection to assure that disinfectant is dispersed into all parts.
      c. If at the end of the 3-hour test the chlorine concentration is less than 50 ppm, reclean pump, reapply disinfectant, and retest until a satisfactory test result is obtained.
      d. After chlorination, flush water until chemically and bacteriologically the system matches the supply.
   3. Disposal of chlorinated water:
      a. Do not allow the water to flow into waterways without first neutralizing the water a disinfectant residual. Refer to AWWA C651 appendix for neutralizing methods.

3.3 CONTRACTOR'S CQC

A. Testing, General:
   1. Notify the Engineer in writing a minimum of 48 hours in advance of the testing. Perform testing in presence of Engineer or Owner.
   2. Furnish all test equipment and perform tests in a manner satisfactory to Engineer and as approved in Contractor's test plan.
   3. Testing equipment shall be calibrated and positioned in a manner that is easily accessible and observable.

B. HDPE Pipe Testing:
   1. Hydrostatic Testing (Pressure Pipe):
      a. Conduct test on buried piping after trench has been completely backfilled. Testing may be done prior to placing final surface treatments such as concrete, asphalt, and road base, as approved by Engineer.
      b. Contractor, may if field conditions allow, pipe is secured, and as approved by Engineer partially backfill trenches and leave joints exposed for inspection to conduct the initial leak test. The final test is required to be conducted when the pipe is completely backfilled.
      c. Supply temporary water and properly dispose of water as approved by Owner.
      d. Preparation:
         1) Once the piping is laid and backfilled, install temporary thrust blocking or other restraints as necessary to prevent movement of the pipe and protect adjacent pipe and equipment. Make necessary taps and connections into piping prior to testing.
         2) Wait minimum 5 days after pouring thrust blocks before testing. If early high-concrete cement is used, wait a minimum 2 days before testing.
         3) Isolate new piping from existing piping.
         4) Remove all suitably isolated appurtenant instruments or devices that could be damaged during the testing.
         5) Interior of pipe shall be free of all foreign matter prior to conducting test.
      e. Procedure:
         1) Test pressure for pressure contact water lines shall be 100 psi measured at the low point of the pipeline.
         2) Maximum filling velocity shall be 0.25 feet per second, calculated based on the fill inside cross sectional area of the pipe. Expel air from pipe during filling. Expel through air release valve(s) or through corporation stop at high points and strategic points.
         3) Test procedure consists of two steps – (1) Stabilization Phase and (2) Test Phase. During the Stabilization Phase, apply and maintain the specified test pressure with a hydraulic force pump. Valve-off piping when test pressure is reached. Add make-up water at hourly intervals for 2 hours to maintain test pressure. At the end of the 2 hours (after adding any make-up water to maintain test pressure), begin the Test Phase. Test Phase shall continue for another 2 hours. At the end of the Test Phase, determine pipe leakage. Leakage is defined as the quantity of water supplied into the pipe, or any valved section thereof, necessary bring the pressure back to the test pressure level. Log the water volume used.
         4) If the test is not completed due to equipment failure, leakage, or other reasons, slowly depressurize the test section of pipe and allow the pipe to relax for a least 2 hours before retesting.
         5) If test exceeds the allowable leakage rate, and/or if there are visible signs of leakage, repair defective pipe section or connection and repeat test.

f. Allowable Leakage:

1) The maximum allowable amount of make-up water at the conclusion of the Test Phase shall not exceed the amounts in the following table. The table is based on test pressures for SDR 11 pipe at 1.5 times the pressure class of the pipe. If pipe sizes or pipe classification differ, coordinate with Engineer for applicable allowable leakage values.

Make-Up Water Allowance for Test Phase (U.S. Gallons per 100 feet of Pipe)	
Nominal Pipe Size (Inches)	**2-Hour Test (Gallons)**
2	0.10
3	0.15
4	0.25
6	0.60

2. HDPE Pipe Low Pressure Air Testing (Gravity Pipes):

a. Conduct test on buried piping after trench has been completely backfilled. Testing may be done prior to placing final surface treatments such as concrete, asphalt, and road base, as approved by Engineer.

b. Contractor, may if field conditions allow, pipe is secured, and as approved by Engineer partially backfill trenches and leave joints exposed for inspection to conduct the initial leak test. The final test is required to be conducted when the pipe is completely backfilled.

c. Preparation:

1) Once the piping is laid and backfilled, install temporary thrust blocking or other restraints as necessary to prevent movement of the pipe and protect adjacent pipe and equipment. Make necessary taps and connections into piping prior to testing.

2) Wait minimum 5 days after pouring thrust blocks before testing. If early high-concrete cement is used, wait a minimum 2 days before testing.

3) Isolate new piping from existing piping.

4) Remove all suitably isolated appurtenant instruments or devices that could be damaged during the testing.

5) Interior of pipe shall be free of all foreign matter prior to conducting test.

d. Procedure:

1) Plug all pipe outlets with suitable plugs rated for the air testing pressure. Brace plugs securely. Segments of pipe to be tested can be isolated using the nearest valve or by temporarily installing plugs or blind flanges. If valves are not suitable for testing, use temporary plugs or blind flanges.

2) Add air slowly until an internal air pressure of 4 psig is reached. Check all exposed pipes and plugs and fittings for leakage by coating with a soap solution (not permitted under freezing temperatures). If any leaks are found, bleed off air and make repairs, and then restart the test.

3) Test procedure consists of two steps – (1) Stabilization Phase and (2) Test Phase. During the Stabilization, apply and maintain the specified test air pressure delivered by the air compressor. Valve-off piping system when test pressure is reached. Add make-up air at hourly intervals for 2 hours to maintain test pressure. At the end of the 2-hour Stabilization Phase (after adding any make-up air to maintain test pressure), begin the Test Phase.

Test Phase shall continue for another 2 hours. At the end of the Test Phase, to pass the test there should be no measurable change in air pressure.

4) If the test is not completed due to equipment failure, leakage, or other reasons, slowly depressurize the test section of pipe and allow the pipe to relax for a least 2 hours before retesting.

5) If test fails, repair the defective pipe section or connection and repeat test.

3. Stainless Steel Pipe, Hydrostatic Testing:
   a. General:
      1) Refer to HDPE pipe hydrostatic testing for water sourcing and general information related to preparation. Coordinate with HDPE pipe testing.
   b. Procedure:
      1) Follow HDPE pipe testing and coordinate. Stainless steel piping does not require the Stabilization Phase. It may be tested once pressures are reached. No leakage is permitted to pass the test through all stainless steel pipe sections.
      2) SST pipe may be tested with HDPE pipe; however, the HDPE pipe procedures will need to be followed and no leakage will be permitted if tested together.
4. Valves Testing and Inspection:
   a. Valve may be either tested while testing pipes, or as a separate step.
   b. Test that valves open and close smoothly under operating pressure conditions.
   c. Count and record the number of turns to fully open and close valves; account for any discrepancies in manufacturer's data.
   d. Set, verify, and record set pressure for relief and regulating valves.
5. Disinfecting Potable Water System:
   a. Collection of Samples:
      1) Coordinate activities to allow samples to be taken in accordance with this section and with adequate notice to Owner and health district to witness testing.
      2) Provide valves at sampling points.
      3) Provide access to sampling points.
   b. Test Equipment:
      1) Clean containers and equipment used in sampling and assure they are free of contamination.
      2) Obtain sampling containers from the certified laboratory and follow all instructions for testing and shipping.
   c. After all systems have been thoroughly cleaned and disinfected, the certified laboratory shall collect samples and test in accordance with the Standard Methods for Examination of Water.
   d. If tests are bacterially positive, disinfecting procedures and testing shall be repeated.

END OF SECTION

SECTION 02668

UNDERGROUND STORAGE TANKS

PART 1 – GENERAL

1.1 SUMMARY

A. This Section includes the following:
   1. Underground contact water storage tanks, monitoring and controls, and appurtenances.
   2. Underground fire suppression water holding tank, monitoring and controls, pump station, heated valve box/hose reel skid assembly, and appurtenances.

1.2 SUBMITTALS

A. Action Submittals:
   1. Product information and datasheets for all specified equipment and products, including specialty tank backfill materials.
   2. Tank preparation instructions and recommendations; storage and handling requirements and recommendations; and installation manual and operating instructions.
   3. Tank manufacturer shall submit the following for review and approval prior to fabrication of the tanks:
      a. Detailed shop drawings of each tank complete with all accessories supplied by the manufacturer.
      b. Detailed shipping, handling and installation instructions.
      c. Factory testing program
      d. Field testing and quality control program for leakage.
   4. Testing Work Plan(s):
      a) Tank to be tested, proposed dates, method of isolation, method of testing, test pressure(s), and steps.
   5. Testing Report(s):
      a. Test logs, certificate of calibration of instruments used for testing, testing results, and documentation.

B. Informational Submittals:
   1. Manufacturer's authorization for tank installer.
   2. Certified test reports for compliance with the specifications.

1.3 QUALIFICATIONS

A. Pre-approved Tank Manufacturer: Xerxes Corporation, 7901 Xerxes Ave. South, Minneapolis, MN, (952) 887-1890.
B. Tank Supplier: Shall have manufacturer's certification or authorization to supply and install tanks. Pre-approved Tank Supplier: R.C. Worst & Co., 4101 E. Broadway, Spokane, WA 99202, (509) 534-5616.

1.4 WARRANTY

A. Warranty: Provide manufacturer's standard warranty.

1.5 SEQUENCING AND SCHEDULING

A. The subgrade is acceptable and approved by Contractor upon turn-over from the Owner for the contact water tanks. Subgrade is prepared and accepted for the fire suppression water holding tank.

B. Preinstallation meeting has been conducted to the satisfaction of the Engineer.

1.6 PREINSTALLATION MEETING

A. Meet 5 calendar days minimum prior to commencing the installation of the tanks.

B. Attendees shall have representatives from the following parties:
   1. Contractor.
   2. Tank supplier/installer.
   3. Owner.
   4. Engineer.

C. Topics to include:
   1. Specifications and drawings.
   2. Submittal status and installation schedule.
   3. Installation approach and procedures.
   4. Installation equipment.
   5. Installation crew size and qualifications.

1.7 DELIVERY, STORAGE, AND HANDLING

A. Storage and handling of the tanks and accessories shall conform to the manufacturer's instructions and shall be done in such a manner as to prevent damage. Comply with tank manufacturer's instructions for delivery, storage, and tank handling.

B. Contractor shall provide onsite storage to protect all products and supplies. Any portion of the products that are damaged shall be replaced, at no additional cost to the Owner.

C. Move tanks by lifting and setting into position using appropriate rigging and crane equipment. Do not move tanks by rolling or sliding. Do not drop.

D. Always lift tanks by using lifting lugs provide with the tank. Distribute the lifting load evenly between the lifting lugs. Use spreader bars and slings as needed.

E. Make sure that lifting equipment is rated for the load.

F. Select a smooth, solid level surface on which to place the tank. Clear the area of all rocks, trash, debris, and other obstructions. Make sure all tools and equipment are out of the way of the staging location for the tank. Confirm staging/storage location with Owner.

G. Unload the tank making sure it is secure and will not roll of the truck. Use standard of practice for hoisting and guiding.

PART 2 - PRODUCTS

2.1 GENERAL

A. Furnish all tanks, fittings, and associated appurtenances as specified or shown on the plans. Coordinate yard piping with connections to tanks in shop drawing for approval by Engineer before ordering tanks.

B. Storage tanks, monitoring and controls and appurtenances shall be supplied by a single manufacturer/supplier.

C. Furnish all manufacturer's certifications, certifying that the tanks meet the contract requirements.

D. Use fittings for connecting to service lines of the same material, construction, and joint design as the service pipes.

E. Loading Conditions - Tank shall meet the following design criteria:
   1. Internal Load - Tank shall be designed to withstand a 5-psig air-pressure test with a 5:1 safety factor.
   2. External Hydrostatic Pressure - Tank shall be designed for 7 feet of overburden over the top of the tank, the hole fully flooded, and a safety factor of 5:1 against general buckling.
   3. Surface Loads - Tank shall be designed to withstand surface H-20 and HS-20 axle loads when properly installed according to manufacturer's instructions, if not protected at the surface by bollards, and buried for frost protection.

F. Storage tanks, monitoring and controls and appurtenances shall be supplied by a single manufacturer/supplier for all three tanks.

G. Manufacturer: Xerxes Corporation.

2.2 FIRE SUPPRESSION WATER HOLDING TANK

A. Tank Design - Fiberglass reinforced plastic (FRP) tank:
   1. The tank size, fittings and accessories shall be as shown on the drawings.
   2. Tank shall be manufactured with structural ribs which are fabricated as in integral part of the tank wall.
   3. Tank shall be manufactured with a laminate consisting of resin and glass fiber reinforcement only. No sand/silica fillers or resin extenders shall be used.
   4. Tank shall be vented to atmospheric pressure.
   5. Capacity – 15,000 gallons.

B. Tank Accessories:
   1. Tank Anchoring:

a. Anchor straps shall be as supplied by tank manufacturer and designed for a maximum load of 25,000 lbs.
b. Galvanized turnbuckles shall be supplied by the tank manufacturer.
c. Prefabricated concrete anchors shall be supplied by the tank manufacturer, designed to the ACI 318 standard, manufactured with 4,000 psi concrete and shall have adjustable anchor points.
d. Access Openings:
    1) All access openings shall have a diameter of 30 inches, complete with riser, lid and necessary hardware.
e. Attached Access Risers:
    1) Attached access risers shall be PVC or FRP as supplied by tank manufacturer.
    2) Attached access risers shall be 30 diameter
    3) Access risers shall be attached to access openings during installation utilizing adhesive or FRP bonding kits as supplied by the tank manufacturer.
f. Piping and Fittings:
    1) Tank shall be equipped with factory-installed threaded fittings, or pipe stubs.
    2) All flanged nozzles shall be flanged and flat-faced, and conform to Class 150 bolting patterns as specified in ANSI/ASME/ B16.5.
    3) Carbon steel and stainless steel NPT fittings shall withstand a minimum of 150 foot-pounds of torque and 1,000 foot-pounds of bending, both with a 2:1 safety factor.
g. Manway Openings:
    1) The standard manway shall be flanged, 22 inches I.D. and complete with gaskets, bolts and cover.
    2) Manway openings shall be designed to withstand 5-psig test pressure with a 5:1 safety factor.
h. Ladders: Ladders shall be the standard FRP ladder as supplied by tank manufacturer.
i. Pump Platforms:
    1) FRP pump platforms shall be supplied by tank manufacturer.
j. Internal Piping:
    1) All internal piping shall be supplied by tank manufacturer.
k. Suction/Fill tube:
    1) Vertical draft/fill tubes shall be a minimum of PVC SCH 40 or FRP.
    2) Vertical draft /fill tubes shall be factory installed.
    3) Vertical draft /fill tubes shall terminate 4 inches above the bottom of tank.
    4) Vertical draft tubes shall have anti-vortex plate factory installed.
    5) Install in a surface box as shown and specified on the plans. The surface connection shall be a 2” stainless steel camlock fitting. Confirm style and size with Owner for fire department connection.
l. Pump station: The pump station for the fire suppression water holding tank shall be designed to be installed integral with the tank as specified and shown on the plans. Pump capacity shall be a minimum of 50 gallons per minute with a TDH of 30 feet.
m. Accessories – heated valve box/hose reel skid, hose (maximum length to fit on the reel), backflow preventer, solenoid valve, and all other accessories shall be

as specified and shown on the plans.

2.3 CONTACT WATER HOLDING TANKS

A. Tank Design: Double-Wall fiberglass reinforced plastic (FRP) tank as also specified and shown on the drawings.

1. The tank size, fittings and accessories shall be as shown on the drawings.
2. Tank shall be manufactured with structural ribs which are fabricated as in integral part of the tank wall.
3. Tank shall be manufactured with a laminate consisting of resin and glass fiber reinforcement only. No sand/silica fillers or resin extenders shall be used.
4. Tank shall be vented to atmospheric pressure.
5. Capacity – 10,000 gallons each.
6. Interstitial Space:
    1) The interstitial space between the primary and secondary walls shall be constructed with a glass reinforcement material that provides a structural bond between the two tank walls, while creating a defined interstice that allows for free flow of liquid.
    2) A tank top fitting shall be provided to allow for a monitoring sensor to be installed at the bottom of the interstice.
    3) The interstice of the tank shall be designed to withstand 20-psig pressure.
7. Tank Accessories:
    a. Tank Anchoring:
        1) Anchor straps shall be as supplied by tank manufacturer and designed for a maximum load of 25,000 lbs.
        2) Galvanized turnbuckles shall be supplied by the tank manufacturer.
        3) Prefabricated concrete anchors shall be supplied by the tank manufacturer, designed to the ACI 318 standard, manufactured with 4,000 psi concrete and shall have adjustable anchor points.
    b. Access Openings:
        1) All access openings shall have a diameter 30 inches, complete with riser, lid and necessary hardware.
    c. Attached Access Risers:
        1) Attached access risers shall be PVC or FRP as supplied by tank manufacturer.
        2) Attached access risers shall be 30 inches in diameter
        3) Access risers shall be attached to access openings during installation utilizing adhesive or FRP bonding kits as supplied by the tank manufacturer.
    d. Piping and Fittings:
        1) Tank shall be equipped with factory-installed threaded fittings, or pipe stubs.
        2) PVC piping shall at a minimum meet the requirements of ANSI Schedule 40.
        3) All flanged nozzles shall be flanged and flat-faced, and conform to Class 150 bolting patterns as specified in ANSI/ASME/ B16.5.
        4) Carbon steel and stainless steel NPT fittings shall withstand a minimum of 150 foot-pounds (203 NM) of torque and 1,000 foot-pounds of bending, both with a 2:1 safety factor.
    e. Manway Openings:

1) The standard manway shall be flanged, 22 inches I.D. and complete with gaskets, bolts and cover.
2) Manway openings shall be designed to withstand 5-psig test pressure with a 5:1 safety factor.

f. Ladders:
1) Ladders shall be the standard FRP ladder as supplied by tank manufacturer.

g. Baffles and Partitions, if applicable:
1) Baffles and Partitions shall be capable of withstanding hydrostatic loads occurring when one compartment is empty and the remaining compartment(s) is full.

h. Electronic Liquid-Level Monitoring System:
1) General:
a) Electronic liquid-level monitoring system for each tank, including controllers and sensors.
b) The liquid-level monitoring systems shall be included and shipped with the tanks from the manufacturing facility. Only Omntec model LU2-OWP shall be used.
2) Materials:
a) The controllers shall be UL-listed and shall have NEMA 4X, weatherproof, corrosion-resistant enclosures.
3) Requirements:
a) The controllers shall have audio-visual alarms activated by a float sensor.

2.4 SPECIALTY TANK BACKFILL

A. Backfill material shall meet the manufacturer’s recommendations and shall be approved by manufacturer’s representative upon delivery of product and placement. Pre-approval of the product by the Engineer is required prior to delivery to the project site.

PART 3 - EXECUTION

3.1 INSTALLATION

A. General:
1. Tank shall be installed according to the tank manufacturer's instructions, as approved by Engineer.
2. Regulatory Requirements: Comply with applicable requirements of the laws, codes, ordinances, and regulations of federal, state, and local authorities having jurisdiction.
3. Refer to Section 02300, Earthwork for subgrade and structural base preparation requirements.

B. Once pre-installation inspection and testing has been passed and accepted, place the tank onto the approved prepared subgrade. Provide appropriate clearances and provide sufficient access for proper material placement and compaction between the tanks, and between tanks and cut banks (excavation sidewalls).

C. Align the tanks for proper placement of anchor straps, and secure. Check tank deflection in accordance with manufacturer’s instructions.

D. Backfill completely around each tank with specialty backfill in accordance with tanks

manufacturer’s instructions. Place material evenly on opposite sides of the tanks so that tanks do not shift or roll. Work the material under the ribs and under the end domes. Use a non-metal tamping rod long enough to reach beneath the tank to push material under the tank body and domes until all voids are filled and the tank is fully supported. Do not strike the tank with the tamping rod.

E. Continue backfilling using specialty backfill material as specified in the manufacturer’s installation instructions Continue use of specialty backfill within 8 inches of the surface where road aggregate shall be placed to finish grade. Use a separation geotextile between the surfacing layer and tank specialty backfill as directed by Engineer.

F. Do not drive vehicles or heavy equipment over or near the tanks. Do not compact material directly over the tank until sufficient depth is obtained. Confirm with tank manufacturer the maximum effort that can be induced directly over the tank and depth to achieve satisfactorily compaction.

G. Check tank deflection at milestone points during backfilling, as specified in the manufacturer’s installation instructions.

3.2 TESTING

A. Tank shall be leak tested according to the tank manufacturer's instructions, as approved by Engineer. Certification of such testing at the plant shall be provided with the manufacturer’s submittal information.

3.3 CONTRACTORS CQC

A. Product Delivery Inspection:
   1. Before the tank is unloaded off the truck (and before pre-installation testing), inspect the entire exterior of the tank surface for damage in the presence of Engineer. Note any visible signs of damage and confirm with Owner and Engineer that delivered products are acceptable before unloading off the truck.

B. Preinstallation Inspection and Testing:
   1. All tanks are inspected and tested at the factory. To confirm that no damage occurred during transport, perform pre-installation inspection and testing of the tanks after the tanks are lifted off the trailer and before installation, and in the presence of Engineer.

C. Deflection Measurements:
   1. Before, during, and after backfilling take deflection measurements to assure they are within acceptable levels. All measurements shall be taken in the presence of Engineer.

D. Post-Installation Testing (Leak Testing):
   1. Once the tank is completely backfilled, the tank shall be tested for leaks in accordance with the manufacturer’s instructions in the presence of Engineer. Instrumentation and control systems (and the lift station for the fire suppression water holding tank) shall be tested and proven to be set at the correct set points and function properly.

END OF SECTION

SECTION 02700

CONTACT WATER LIFT STATIONS

PART 1 GENERAL

1.01 SUMMARY

A. This Section includes the following:

1. Prepackaged Contact Water Lift Station
2. Prepackaged Building Drain Lift Station

1.02 SUBMITTALS

A. Action Submittals:

1. Product information, shop drawings of pre-assembled/shop fabricated units, and datasheets for all specified equipment and products.

B. Informational Submittals:

1. Special shipping, storage and protection, and handling instructions.
2. Manufacturer's printed installation instructions.
3. Field Performance Test Reports and Log.
4. Suggested spare parts list to maintain equipment in service for period of 5 years. Include list of special tools required for checking, testing, parts replacement, and maintenance with current price information.
5. List special tools, materials, and supplies furnished with equipment for use prior to and during startup and for future maintenance.
6. Operation and Maintenance Data.

1.03 QUALIFICATIONS

A. Pump stations shall be provided by one supplier/manufacturer with creditable history, as approved by Engineer. Pre-approved Supplier: R.C. Worst & Co., 4101 E. Broadway, Spokane, WA 99202, (509) 534-5616.

1.04 DELIVERY AND HANDLING

A. Contractor shall coordinate with the manufacturer/supplier to have the package lift stations delivered to the project site. After delivery, Contractor shall insure that the pump and control panel are protected from precipitation or submergence.

PART 2 PRODUCTS

2.01 GENERAL

A. The lift stations shall be supplied for the intended purpose of pumping wastewater with UL-rated equipment and accessories.

B. The wet well shall be prefabricated fiberglass reinforced polyester (FRP). The unit shall be completely factory-assembled, including pumps, hardware, and controls. Installation shall only require minor adjustments and field assembly. The lift stations shall be manufactured by Automated Flow Systems®, as supplied by RC Worst & Company, or approved equal.

C. Provide O&M manuals as required in Section 01700, Contract Closeout. Startup and commissioning of the units shall follow the procedures in Section 1800, Equipment Testing and System Startup.

2.02 WET WELL VAULT

A. The reinforcing material shall be a commercial-grade of glass fiber having a coupling agent providing suitable bond between the glass reinforcement and the resin.

B. The laminate shall consist of a resin rich inner surface, a chop-spray interior liner, and a chop-hoop filament-wound structural exterior layer.

C. The inner surface shall be free of defects with a smooth finish. The exterior layer of the wall laminate shall be of construction suitable for the intended service and contain sufficient glass by weight to provide the aggregate strength necessary to meet the tensile and flexural requirements.

D. The exterior surface shall be relatively smooth with no exposed fibers or sharp projections.

E. Vault top flange shall have an outside diameter at least four inches larger than the nominal diameter.

F. Vault bottom shall be constructed of encapsulated steel anti-flotation flange. The wet well FRP bottom laminate shall have less than 0.375 inches of center elastic deflection (deformation) when in service in totally submerged conditions. The bottom diameter shall be at least 4 inches larger than the nominal diameter. The flange shall be constructed to provide anti-flotation countermeasures with concrete placed around the anti-flotation flange.

2.03 PUMPS

A. General:

1. Stator winding shall be of the open type with Class B insulation good for 130°C (266°F) maximum operating temperature. Winding housing shall be filled with a clean high dielectric oil that lubricates bearings and seals and transfers heat from windings and rotor to outer shell. Air-filled motors which do not have the superior heat dissipating capabilities of oil-filled motors will not be considered.
2. Motor shall have two heavy-duty ball bearings to support pump shaft and take radial and thrust loads and a sleeve guide bushing directly above the lower seal to take radial load and act as flame path for seal chamber. Ball bearings shall be designed for 50,000 hours B-10 life. Stator shall be pressed into motor

housing. The motor pump shaft shall be of #416 stainless steel threaded to take pump impeller.

3. A heat sensor thermostat shall be attached to top end of motor winding and shall be connected in series with the magnetic contactor coil in control box to stop motor if motor winding temperature reaches 221°F. Thermostat to reset automatically when motor cools. Two heat sensors shall be used on 3 phase motors.
4. Motor shall be protected by two mechanical seals mounted in tandem with a seal chamber between the seals. Seal chamber shall be oil filled to lubricate seal face and to transmit heat from shaft to outer shell. Seal face shall be carbon and ceramic and lapped to a flatness of one light band. A double electrode shall be mounted in the seal chamber to detect any water entering the chamber through the lower seal.
5. The pump impeller shall be of the recessed Myers-type to provide an open unobstructed passage through the volute for solids. Impeller shall be of cast iron and shall be threaded onto stainless steel shaft.
6. The pump case shall be designed for a recessed vortex impeller and have unobstructed passageways to handle full spherical solids. The pump volute shall be constructed of Class 30 gray cast iron.
7. The motor housing castings shall be high-tensile strength Class 30 gray cast iron. All iron castings shall be pretreated with phosphate and chromic rinse and to be painted before machining and all machined surfaces exposed to the sewage water to be repainted. All fasteners to be 302 stainless steel.
8. Power cord and control cord shall be double-sealed. The power and control conductor shall be single-strand sealed with epoxy compound and then clamped in-place with rubber seal bushings to seal outer jacket against leakage and to provide for strain pull. Cords shall withstand a pull of 300 pounds to meet UL requirements. Insulation of power and control cords shall be type SOOW. Both control and power cords shall have a green carrier ground conductor that attaches to motor frame.

B. Contact Water Lift Station:

1. Each pump shall be a submersible, centrifugal explosion-proof sewage grinder pump – Myers model SX50H, rated at 1/2 HP, 200 volts, three phase, 1750 rpm. Each pump shall produce 30 gpm at 30 ft TDH.

C. Building Drain Lift Station:

1. Each pump shall be a submersible, centrifugal explosion-proof sewage grinder pump Myers model SX50 rated at 1/2 HP, 200 volts, three phase, 1750 rpm. The pump shall produce 20 gpm at 20 ft TDH.

2.04 HARDWARE AND ACCESSORIES

1. Perpendicular vault penetrations shall be made using rubber grommets up to and including four-inch pipe size. Penetrations larger than 4 inch, or that are not perpendicular to within ten degrees, shall be made using a GeoFlex® boot, or by casting a PVC hub directly into the wall.
2. All fasteners and hardware shall be series 300 stainless steel, aluminum, fiberglass reinforced polyester, or other approved non-corrosive materials suitable for the intended application.

3. Float switch brackets shall be fabricated using series 300 stainless steel. The bracket shall provide a support for the specified float switches and provide strain relief. The bracket shall include a stationary bracket and a removable bracket so the floats may be easily removed for servicing and inspecting.
4. Splice boxes shall be provided for pump power cords and float switches as specified. one explosion proof splice box shall be provided for the pump power cords. Another Nema 4X splice box shall be provided for the float switches. Both splice boxes shall have individual conduit connections to the control panel.
5. A discharge elbow shall be furnished with each pump. The discharge elbow shall rest squarely on the floor of the wet well vault and be securely fastened using series 300 stainless steel fasteners. The base elbow shall be equivalent to the nominal pump discharge size. A metal-to-metal mating surface shall be utilized. The discharge elbow shall include a ball check valve which may be removed with the pump.
6. Slide rails shall be used to direct the pump in proper alignment with the stationary discharge piping shall be of a dual slide rail design. The rails shall be type 304 schedule 40 stainless steel. The slide rail system shall allow the pump to be automatically connected to the discharge elbow without need for personnel to enter the wet well. Sealing of the pump to the discharge elbow shall be accomplished by a single-down-and-in-motion of the pump.
7. Each pump shall be supplied with a lifting system. The system shall be a stainless steel pump Rail, and a stainless steel cable attached using stainless steel hardware. The system supplied must be sized to safely lift the pump weight. The cable shall be of sufficient length to extend from the pump to the top of the wet well.
8. All discharge piping and fittings within the list station shall be schedule 80 PVC (contact water lift station) or schedule 40 PVC (building drain lift station).
9. The isolation valves shall match the schedule of the adjoining pipe and shall be true union valves manufactured to ASTM F 1970 standards. Valves shall include union nuts with Buttress threads. All O-rings shall be EPDM. Handles shall be polypropylene and extended to within 8 inches of lift station rim for easy access.
10. Valve operators and electrical junction boxes shall be mounted on the Automated Flow Systems® Operation Deck. The Operations Deck shall allow operators easy access for inspection and servicing.
11. The H-20 access hatch shall be cast into a reinforced concrete slab, as shown. The access frames and covers shall have a ¼” thick, one-piece, mill finish, extruded aluminum frame, incorporating a continuous concrete anchor. The inside of the frame shall have a door-support ledge on two (2) sides. Both frame and ledge shall be supported concrete. The door panels shall be ¼” aluminum diamond plate, reinforced to withstand a live load of the H-20, Uniform live load. Door shall open to 90 degrees and automatically lock with a T-316 stainless steel hold open arms with release handle. Doors shall close flush with the frame. Hinges and all fastening hardware shall be T-316 stainless steel. Unit shall lock with a T-316 stainless steel slam lock with removable key and have a non-corrosive handle. The monolithic slab and hatch shall be constructed to isolate traffic loading from fiberglass wet well structure.

2.05 PUMP CONTROL PANELS

A. General:

1. Provide a complete lift station control panel with duplex controller, motor starters, operator interface devices, and appurtenances installed in a single NEMA 4X enclosure. The pump control panel shall be manufactured at a facility meeting U.L. Standard 698A for industrial controls. Pump control panel shall be designed to operate pumps in a Class 1 Division 1 environment.
2. The enclosure shall be NEMA 4X non-metallic with provisions for padlocking. All operator interface devices shall be located inside the door, unless otherwise indicated. Each pump shall have a hand-off-auto switch and a run light.
3. A circuit breaker shall be used to protect from line faults and to disconnect the pump from the incoming power. Circuit breakers shall be thermal magnetic and sized to meet NEC requirements for motor controls. IEC rated magnetic starter shall include an overload relays sized to match the pump horsepower.
4. Duplex alternating pump controller circuit boards shall be provided for control logic for each package unit. The controller shall have inputs for 4 float switches; they shall be: Pumps Off, Pumps On, Lag On, and High Level. Intrinsically safe relays shall be provided for float inputs. The controller shall have an input for connecting each pump motor seal fail (moisture) sensors. The controller shall measure the resistance between the moisture probes. When the resistance falls below 50,000 Ohms, the seal fail LED for the specified pump motor and the seal fail relay output shall activate. This shall not disable the pump. The pump with seal fail shall be demoted to lag pump. The controller shall have an input for connecting each pumps motor heat sensor. Should this input sense an open circuit to ground, the temp fail light will illuminate and the corresponding pump shall be disabled.
5. The controller shall have a red alarm beacon mounted on the top of the control panel.
6. Shall be provided with the following options: 120-volt control transformer (provided by others), UL 698A-labeled with intrinsically safe circuit extensions for floats, power-on indicator light, elapsed time meter (per pump), and cycle counter (per pump).

PART 3 EXECUTION

3.01 INSTALLATION

A. Refer to Section 02300, Earthwork for subgrade and structural base preparation requirements.

B. Install in accordance with manufacturer’s/supplier’s instructions.

C. Connect piping to the pump stations without imposing strain to flanges.

4.01 CONTRACTOR'S CQC

A. General:

1. Follow all earthwork requirements for excavation, subgrade preparation, and backfill in accordance with Section 02300, Earthwork.
2. Refer to Section 01800, Equipment Testing and System Startup.
3. The initial start-up shall be performed by an authorized representative of the packaged lift station supplier. The representative shall inspect the installation, supervise the start-up, and instruct the Owner's personnel in the proper operation and maintenance procedures for the entire packaged lift stations. Four hours shall be allowed for start-up and training for each system. If the system is not operational the Contractor shall be responsible for rescheduling and additional costs for representative and Engineer to return.

B. Functional Test: Conduct on each pump.

1. Test for continuous 2-hour period.
2. Test Report Requirements: In accordance with Hydraulic Institute Standards for submersible pump tests HIS 1.6 and 11.6.
3. Tests shall be conducted with clean water under simulated conditions. All clean water shall be removed from the contact water system (including all tanks) at the conclusion of the testing.

C. Performance Test: Conduct on each pump.

1. Perform under actual or approved simulated operating conditions. Throttle discharge valve to obtain pump data points on curve at 2/3, 1/3, and shut-off conditions.
2. Test shall be conducted under simulated conditions

END OF SECTION

DIVISION 3

CONCRETE

SECTION 03100

CONCRETE FORMWORK

PART 1 - GENERAL

1.1 RELATED DOCUMENTS

A. Drawings and general provisions of the Contract, including General and Supplementary Conditions and Division 01 Specification Sections, apply to this Section.

1.2 SUMMARY

A. Section includes requirements for concrete formwork, bracing, shoring, supports, and falsework, in accordance with the Contract Documents.

B. Related Requirements:
   1. Section 02644 “HDPE Embedment Concrete Liner”.
   2. Section 03300 “Cast-in-Place Concrete”.
   3. Section 03200 “Reinforcement Steel”.

1.3 ACTION SUBMITTALS

A. The Contractor shall, in accordance with the requirements in Section 01300 - Submittals, submit detailed Drawings of the falsework proposed to be used. Such Drawings shall be in sufficient detail to indicate the general layout, sizes of members, anticipated stresses, grade of materials to be used in the falsework, means of protecting existing construction which supports falsework, and typical soil conditions.

   1. Concrete falsework and any associated scaffolding for concrete wall and slab placements over 14 feet in height shall also have engineering calculations and drawings associated with the submittal. The calculations and drawings shall be performed, sealed, and signed by a licensed professional civil engineer registered in the State of Montana.

B. The Contractor shall, in accordance with the requirements in Section 01300 - Submittals, submit the following.

   1. Form ties and all related accessories, including taper tie plugs, if taper ties are used.
   2. HDPE floor and wall liner methods.
   3. Form gaskets.
   4. Form releasing agent, including NSF certification.
   5. List of form materials and locations for use.

1.4 QUALITY CONTROL

A. Tolerances: The variation from established grade or lines shall not exceed 1/4-inch in 10 feet and there shall be no offsets or visible waviness in the finished surface. All other tolerances shall be within the tolerances of ACI 117.

PART 2 - PRODUCTS

2.1 GENERAL

A. Except as otherwise expressly accepted by the Engineer, all lumber brought on the job site for use as forms, shoring, or bracing shall be new material. All forms shall be smooth surface forms and shall be of the following materials:
   1. Walls: Steel or plywood panel.
   2. Columns: Steel, plywood or fiberglass.
   3. Roof and Floor: Plywood.
   4. All other Work: Steel panels, plywood, or tongue and groove lumber.

B. Form materials which may remain or leave residues on or in the concrete shall be classified as acceptable for potable water use by the Environmental Protection Agency within 30 days of application or use.

2.2 FORM AND FALSEWORK MATERIALS

A. Materials for concrete forms, formwork, and falsework shall conform to the following requirements:
   1. Lumber shall be Douglas Fir or Southern Yellow Pine, construction grade or better, in conformance with U.S. Product Standard PS 20.
   2. Plywood for concrete formwork shall be new, waterproof, synthetic resin bonded, exterior type Douglas Fir or Southern Yellow Pine plywood manufactured especially for concrete formwork and shall conform to the requirements of PS 1 for Concrete Forms, Class I, and shall be edge sealed.
   3. Form materials shall be metal, wood, plywood, or other approved material that will not adversely affect the concrete and will facilitate placement of concrete to the shape, form, line, and grade shown. Metal forms shall be an approved type that will accomplish such results. Wood forms for surfaces to be painted shall be Medium Density Overlaid plywood, MDO Ext. Grade.

B. Unless otherwise indicated, exterior corners, exposed to view, in concrete members shall be provided with 3/4-inch chamfers. Re-entrant corners in concrete members shall not have fillets unless otherwise indicated.

C. Concrete forms and accessories shall accommodate the HDPE liner system in conformance with the liner supplier installation procedures.

2.3 FORM TIES

A. Form ties with integral waterstops shall be provided with a plastic cone or other suitable means for forming a conical hole to insure that the form tie may be broken off back of the face of the concrete. The maximum diameter of removable cones for rod ties, or of other removable form-tie fasteners having a circular cross-section, shall not exceed 1-1/2 inches; and all such fasteners shall be such as to leave holes of regular shape for reaming.

1. Manufacturers: Subject to compliance with requirements, available manufacturers offering products that may be incorporated into the Work include, but are not limited to, the following:
   a. Burke Penta-Tie system by The Burke Company.
   b. Richmond Snap-Tys by the Richmond Screw Anchor Company.

B. Form ties for water-retaining structures shall have an integral waterstop that tightly fits the form so that it cannot be moved from the midpoint of the tie. Removable taper ties may be used when approved by the Engineer. A preformed neoprene or polyurethane tapered plug sized to seat at the center of the wall shall be inserted in the hole left by the removal of the taper tie.
1. Manufacturers: Subject to compliance with requirements, available manufacturers offering products that may be incorporated into the Work include, but are not limited to, the following:
   a. Burke Taper-Tie System by The Burke Company.
   b. Taper- Ty by the Richmond Screw Anchor Company.

PART 3 - EXECUTION

3.1 GENERAL

A. Forms to confine the concrete and shape it to the required lines shall be used wherever necessary. The Contractor shall assume full responsibility for the adequate design of all forms, and any forms which are unsafe or inadequate in any respect shall promptly be removed from the Work and replaced at no increased cost to the Owner. Provide worker protection from protruding reinforcement bars in accordance with applicable safety codes. A sufficient number of forms of each kind shall be provided to permit the required rate of progress to be maintained. The design and inspection of concrete forms, falsework, and shoring shall comply with applicable local, state and Federal regulations. Plumb and string lines shall be installed before concrete placement and shall be maintained during placement. Such lines shall be used by Contractor's personnel and by the Engineer and shall be in sufficient number and properly installed. During concrete placement, continually monitor plumb and string line form positions and immediately correct deficiencies.

B. Concrete forms shall conform to the shape, lines, and dimensions of members as called for on the Drawings, and shall be substantial, free from surface defects, and sufficiently tight to prevent leakage. Forms shall be properly braced or tied together to maintain their position and shape under a load of freshly placed concrete. If adequate foundation for shores cannot be secured, trussed supports shall be provided.

C. Preparation and placement of the HDPE liner in the form work shall be done carefully, and witnessed and approved by the liner installer.

3.2 FORM DESIGN

A. All forms shall be true in every respect to the required shape and size, shall conform to the established alignment and grade, and shall be of sufficient strength and rigidity to maintain their position and shape under the loads and operations incident to placing and vibrating the concrete. Suitable and effective means shall be provided on all forms for holding adjacent edges and ends of panels and sections tightly together and in accurate alignment so as to prevent the formation of ridges, fins, offsets, or similar surface defects in the finished concrete. Plywood, 5/8-inch and greater in thickness, may be fastened directly to studding if the studs are spaced close enough to prevent visible deflection marks in the concrete. The forms shall be tight so as to prevent the loss of water, cement and fines during placing and vibrating of the concrete. Specifically, the bottom of wall forms that rest on concrete footings or slabs shall be provided with a gasket to prevent loss of fines and paste during placement and vibration of concrete. Such gasket may be a 1- to 1-1/2-inch diameter polyethylene rod held in position to the underside of the wall form. Adequate clean-out holes shall be provided at the bottom of each lift of forms. The size, number, and location of such clean-outs shall be as acceptable to the Engineer. Whenever concrete cannot be placed from the top of a wall form in a manner that meets the requirements of the Contract Documents, form windows shall be provided in the size and spacing needed to allow placement of concrete to the requirements of Section 03300 - Cast-in-Place Concrete. The size, number, and location of such form windows shall be as acceptable to the Engineer.

3.3 CONSTRUCTION

A. Vertical Surfaces: All vertical surfaces of concrete members shall be formed, except where placement of the concrete against the ground is shown. Not less than 1 inch of concrete shall be added to the thickness of the concrete member as shown where concrete is permitted to be placed against trimmed ground in lieu of forms. Such permission will be granted only for members of comparatively limited height and where the character of the ground is such that it can be trimmed to the required lines and will stand securely without caving or sloughing until the concrete has been placed.

B. Construction Joints: Concrete construction joints will not be permitted at locations other than those shown or specified, except as may be acceptable to the Engineer. When a second lift is placed on hardened concrete, special precautions shall be taken in the way of the number, location, and tightening of ties at the top of the old lift and bottom of the new to prevent any unsatisfactory effect whatsoever on the concrete. Pipe stubs and anchor bolts shall be set in the forms where required.

C. Form Ties:

1. Embedded Ties: Holes left by the removal of form tie cones shall be reamed with suitable toothed reamers so as to leave the surface of the holes clean and rough before being filled with mortar as specified for "Finish of Concrete Surfaces" in Section 03300 - Cast-in-Place Concrete. Wire ties for holding forms will not be permitted. No form-tying device or part thereof, other than metal, shall be left embedded in the concrete. Ties shall not be removed in such manner as to leave a hole extending through the interior of the concrete

members. The use of snap-ties which cause spalling of the concrete upon form stripping or tie removal will not be permitted. If steel panel forms are used, rubber grommets shall be provided where the ties pass through the form in order to prevent loss of cement paste. Where metal rods extending through the concrete are used to support or to strengthen forms, the rods shall remain embedded and shall terminate not less than 2 inches back from the formed face or faces of the concrete.

2. Removable Ties: Where taper ties are approved for use, the larger end of the taper tie shall be on the wet side of walls in water retaining structures. After the taper tie is removed, the hole shall be thoroughly cleaned and roughened for bond. A precast neoprene or polyurethane tapered plug shall be located at the wall centerline. The hole shall be completely filled with nonshrink grout for water bearing and below-grade walls. The hole shall be completely filled with nonshrink or regular cement grout for above-grade walls which are dry on both sides. Exposed faces of walls shall have the outer 2 inches of the exposed face filled with a cement grout which shall match the color and texture of the surrounding wall surface.

3.4 REUSE OF FORMS

A. Forms may be reused only if in good condition and only if acceptable to the Engineer. Light sanding between uses will be required wherever necessary to obtain uniform surface texture on all exposed concrete surfaces. Exposed concrete surfaces are defined as surfaces which are permanently exposed to view. In the case of forms for the inside wall surfaces of hydraulic/water retaining structures, unused tie rod holes in forms shall be covered with metal caps or shall be filled by other methods acceptable to the Engineer.

3.5 REMOVAL OF FORMS

A. Careful procedures for the removal of forms shall be strictly followed, and this Work shall be done with care so as to avoid injury to the concrete. No heavy loading on green concrete will be permitted. In the case of roof slabs and above-ground floor slabs, forms shall remain in place until test cylinders for the roof concrete attain a minimum compressive strength of 75 percent of the 28-day strength specified in Section 03300 - Cast-in-Place Concrete; provided, that no forms shall be disturbed or removed under an individual panel or unit before the concrete in the adjacent panel or unit has attained 75 percent of the specified 28-day strength and has been in place for a minimum of 7 days. The time required to establish said strength shall be as determined by the Engineer who will make several test cylinders for this purpose from concrete used in the first group of roof panels placed. If the time so determined is more than the 7-day minimum, then that time shall be used as the minimum length of time. Forms for all vertical walls and columns shall remain in place at least 2 days after the concrete has been placed. Forms for all parts of the Work not specifically mentioned herein shall remain in place for periods of time as determined by the Engineer and ACI 347.

3.6 MAINTENANCE OF FORMS

A. Forms shall be maintained at all times in good condition, particularly as to size, shape, strength, rigidity, tightness, and smoothness of surface. Forms, when in place, shall conform to the established alignment and grades. Before concrete is placed, the forms shall be thoroughly

cleaned. The form surfaces shall be treated with a nonstaining mineral oil or other lubricant acceptable to the Engineer. Any excess lubricant shall be satisfactorily removed before placing the concrete. Where field oiling of forms is required, the Contractor shall perform the oiling at least 2 weeks in advance of their use. Care shall be exercised to keep oil off the surfaces of steel reinforcement and other metal items to be embedded in concrete.

3.7 FALSEWORK

A. The Contractor shall be responsible for the design, engineering, construction, maintenance, and safety of all falsework, including staging, walkways, forms, ladders, and similar appurtenances, which shall equal or exceed the applicable requirements of the provisions of the OSHA Safety and Health Standards for Construction, and the requirements specified herein.

B. All falsework shall be designed and constructed to provide the necessary rigidity and to support the loads. Falsework for the support of a superstructure shall be designed to support the loads that would be imposed if the entire superstructure were placed at one time.

C. Falsework shall be placed upon a solid footing, safe against undermining, and protected from softening. When falsework is supported on any portion of the structure which is already constructed, the load imposed by the falsework shall be spread, distributed, and braced in such a way as to avoid any possibility of damage to the structure.

END OF SECTION

SECTION 03200

REINFORCEMENT STEEL

PART 1 - GENERAL

1.1 RELATED DOCUMENTS

A. Drawings and general provisions of the Contract, including General and Supplementary Conditions and Division 01 Specification Sections, apply to this Section.

B. ACI Publications as listed throughout. The Contractor must have a current copy of ACI SP-15 "Field Reference Manual" for concrete construction on site.

1.2 SUMMARY

A. This Section specifies cast-in place concrete reinforcement and accessories.

B. Related Sections include the following:
   1. Division 03 Section “Cast in Place Concrete".

1.3 SUBMITTALS

A. Steel Reinforcement Placing Drawings: Details of fabrication, bending, and field placement, prepared according to ACI 315, "Details and Detailing of Concrete Reinforcement." Include material grade, sizes, quantities, spacing, splice locations and laps, bending diagrams, arrangement, and supports of concrete reinforcement.
   1. Include elevation view(s) of grade beams and walls.
   2. Include bar placement diagrams which clearly indicate the dimensions and locations of each bar splice.

B. If reinforcement steel is spliced by welding at any location, submit mill test reports which shall contain the information necessary for the determination of the carbon equivalent as specified in AWS 01.4. Submit a written welding procedure for each type of weld for each size of bar which is to be spliced by welding; merely a statement that AWS procedures will be followed is not acceptable.

C. Material Certificates and /or Test Reports: Signed by manufacturers or qualified testing agency certifying that steel reinforcement and reinforcement accessories comply with the Project requirements.

1.4 QUALITY CONTROL

A. If requested by the Engineer, furnish samples from each heat of reinforcement steel delivered in a quantity adequate for testing. Costs of initial tests will be paid by the

Owner. Costs of additional tests due to material failing initial tests shall be paid by the Contractor.

B. If reinforcement steel is spliced by welding at any location, submit certifications of procedure qualifications for each welding procedure used and certification of welder qualifications, for each welding procedure, and for each welder performing the Work. Such qualifications shall be as specified in AWS 01.4.

C. If requested by the Engineer, furnish samples of each type of welded splice used in the Work in a quantity and of dimensions adequate for testing. At the discretion of the Engineer, radiographic testing of direct butt-welded splices will be performed. Provide assistance necessary to facilitate testing. Repair any weld which fails to meet the requirements of AWS 01.4. The costs of testing will be paid by the Owner; except, the costs of all tests which fail to meet specified requirements shall be paid by the Contractor at no increase in cost to the Owner.

D. Concrete reinforcement placement shall be specially inspected per the International Building Code 2012 edition table 1705.3.

E. Preinstallation Conference: Conduct conference at Project site to comply with requirements in Division 01 Section "Project Coordination."
   1. Before concrete work begins, review subgrade approval, placement operations, inspections, tolerances, splicing requirements, and construction joints.
   2. Require representatives of each entity directly concerned with cast-in-place concrete to attend, including the following:
      a. Contractor's superintendent.
      b. Independent testing agency.
      c. Ready-mix concrete manufacturer.
      d. Concrete subcontractor.
      e. Special Inspector.
      f. Owner's Design Representative (Engineer).

1.5 DELIVERY, STORAGE, AND HANDLING

A. Deliver, store, and handle steel reinforcement to keep clean (completely free of mud and oils) and prevent bending.
   1. Repair damaged epoxy coatings on reinforcing steel according to ASTM D 3963.

PART 2 - PRODUCTS

2.1 MATERIAL REQUIREMENTS

A. Materials which may remain or leave residues on or within the concrete shall be certified as compliant with NSF Standard 61.

2.2 REINFORCEMENT STEEL

A. Reinforcement Steel for all cast-in-place reinforced concrete construction shall conform to the following requirements:
   1. Bar reinforcement; shall conform to the requirements of ASTM A 615 for Grade 60 Billet Steel Reinforcement or as otherwise indicated.
   2. Bar reinforcement indicated to be welded shall conform to the requirements of ASTM A 706/A 706M, deformed
   3. Welded wire fabric reinforcement shall conform to the requirements of ASTM A 185 and the details indicated; provided, that welded wire fabric with longitudinal wire of W4 size wire and smaller shall be either provided in flat sheets or in rolls with a core diameter of not less than 10 inches; and provided further, that welded wire fabric with longitudinal wires larger than W4 size shall be provided in flat sheets only.
   4. Spiral reinforcement shall be cold-drawn steel wire conforming to the requirements of ASTM A82.

B. Accessories:
   1. Accessories shall include all necessary chairs, slab bolsters, concrete blocks, tie wires, dips, supports, spacers, and other devices to position reinforcement during concrete placement. All bar supports shall meet the requirements of the CRSI Manual of Standard Practice including special requirements for supporting epoxy coated reinforcing bars. Wire bar supports shall be CRSI Class 1 for maximum protection with a 1/8-inch minimum thickness of plastic coating which extends at least %-inch from the concrete surface. Plastic shall be gray in color.
   2. Concrete blocks (dobies), used to support and position reinforcement steel, shall have the same or higher compressive strength as specified for the concrete in which it is located. Wire ties shall be embedded in concrete block bar supports.
      a. The use of concrete blocks (dobies) is prohibited in elevated concrete slabs.

C. Epoxy coating for reinforcing and accessories, where indicated, shall conform to ASTM A 775.

2.3 WELDED SPLICES

A. Welded splices shall be provided where indicated and where approved by the Engineer. All welded splices of reinforcement steel shall develop a tensile strength which exceeds 125 percent of the yield strength of the reinforcement bars which are connected.

B. All materials required to conform the welded splices to the requirements of AWS D1.4 shall be provided.

2.4 EPOXY GROUT

A. Epoxy for grouting reinforcing bars shall be specifically formulated for such application, for the moisture condition, application temperature, and orientation of the hole to be filled. Epoxy grout shall meet the requirements found on the drawings.

PART 3 - EXECUTION

3.1 GENERAL

A. All reinforcement steel, welded wire fabric, couplers, and other appurtenances shall be fabricated, and placed in accordance with the requirements of the Building Code and the supplementary requirements indicated herein.

3.2 FABRICATION

A. General:
   1. Reinforcement steel shall be accurately formed to the dimensions and shapes shown, and the fabricating details shall be prepared in accordance with ACI 315, ACI 318, and CRSI's "Manual of Standard Practice" except as modified by the Drawings. Stirrups and tie bars shall be bent around a pin having a diameter not less than 1-1/2 inch for No. 3 bars, 2 inch for No. 4 bars, and 2-1/2 inch for No. 5 bars. Bends for other bars shall be made around a pin having a diameter not less than six times the bar diameter, except for bars larger than 1 inch, in which case the bends shall be made around a pin of 8 bar diameters. Bars shall be bent cold.
   2. Fabricate reinforcement bars for structures in accordance with bending diagrams, placing lists, and placing drawings. Said drawings, diagrams, and lists shall be submitted in accordance with Section 01300 - Submittals.

B. Fabricating Tolerances: Bars used for concrete reinforcement shall meet the following requirements for fabricating tolerances:
   1. Sheared Length: ± 1 inch.
   2. Depth of Truss Bars: + 0, - 1/2 inch.
   3. Stirrups, Ties, and Spirals: ± 1/2 inch.
   4. All Other Bends: ± 1 inch.

3.3 PLACING

A. General: Comply with CRSI's "Manual of Standard Practice" for placing and tying reinforcement.

B. Reinforcement steel shall be accurately positioned as indicated, and shall be supported and wired together to prevent displacement, using annealed iron wire ties or suitable clips at intersections. All reinforcement steel shall be supported by concrete, plastic or metal supports, spacers or metal hangers which are strong and rigid enough to prevent any displacement of the reinforcement steel. Where concrete is to be placed on the ground, supporting concrete blocks (or dobies) shall be used, in sufficient numbers to support the bars without settlement, but in no case shall such support be continuous. All concrete blocks used to support reinforcement steel shall be tied to the steel with wire ties which are embedded in the blocks. For concrete over formwork, furnish concrete, metal, plastic, or other acceptable bar chairs and spacers.

C. Limitations on the use of bar support materials shall be as follows.

1. Concrete Dobies: permitted at all locations except in elevated concrete slabs and where architectural finish is required.
2. Wire Bar Supports: Permitted only at slabs over dry areas, interior dry wall surfaces, and exterior wall surfaces.
3. Plastic Bar Supports: permitted at all locations except on grade.

D. Tie wires shall be bent away from the forms in order to provide the indicated concrete coverage.

E. Bars additional to those shown which may be found necessary or desirable by the Contractor for the purpose of securing reinforcement in position shall be provided by the Contractor at no increased cost to the Owner.

F. Unless otherwise indicated, reinforcement placing tolerances shall be within the limits specified in Section 7.5 of ACI 318 except where in conflict with the requirements of the Building Code.

G. Bars may be moved as necessary to avoid interference with other reinforcement steel, conduits, or embedded items. If bars are moved more than one bar diameter, or enough to exceed the above tolerances, the resulting arrangement of bars shall be as acceptable to the Engineer.

H. Welded wire fabric reinforcement placed over horizontal forms shall be supported on slab bolsters. Slab bolsters shall be spaced not more than 30 inches on centers, shall extend continuously across the entire width of the reinforcement mat, and shall support the reinforcement mat in the plane indicated.

I. Welded wire fabric placed over the ground shall be supported on wired concrete blocks (dobies) spaced not more than 3 feet on centers in any direction. The construction practice of placing welded wire fabric on the ground and hooking into place in the freshly placed concrete shall not be used.

J. Epoxy coated reinforcing bars shall be stored, transported, and placed in such a manner as to avoid chipping of the epoxy coating. Nonabrasive slings made of nylon and similar materials shall be used. Specially coated bar supports shall be used. All chips or cracks in the epoxy coating shall be repaired with a compatible epoxy repair material prior to placing concrete.

K. Accessories supporting reinforcing bars shall be spaced such that there is no deflection of the accessory from the weight of the supported bars. When used to space the reinforcing bars from wall forms, the forms and bars shall be located so that there is no deflection of the accessory when the forms are tightened into position.

L. Clean reinforcement of loose rust and mill scale, soil, ice, oils and other foreign materials.

3.4 SPACE OF BARS

A. The clear distance between parallel bars (except in columns and between multiple layers of bars in beams) shall be not less than the nominal diameter of the bars nor less than 1-1/3 times the maximum size of the coarse aggregate, nor less than one inch.

B. Where reinforcement in beams or girders is placed in two or more layers, the clear distance between layers shall be not less than one inch.

C. The clear distance between bars shall also apply to the distance between a contact splice and adjacent splices or bars.

3.5 SPLICING

A. General: Reinforcement bar splices shall only be used at locations indicated. When it is necessary to splice reinforcement at other locations, the character of the splice shall be as acceptable to the Engineer.

B. Splices of Reinforcement:
   1. The length of lap for reinforcement bars, unless otherwise shown shall be in accordance with ACI 318-11, Section 12.15.1 for a Class B splice.

C. Bending or Straightening: Reinforcement shall not be straightened or rebent in a manner which will injure the material. Bars with kinks or bends not shown shall not be used. All bars shall be bent cold, unless otherwise permitted by the Engineer. No bars partially embedded in concrete shall be field-bent except as indicated or specifically permitted by the Engineer.

3.6 CLEANING AND PROTECTION

A. Reinforcement steel shall at all times be protected from conditions conducive to corrosion until concrete is placed around it.

B. The surfaces of all reinforcement steel and other metalwork to be in contact with concrete shall be thoroughly cleaned of all dirt, grease, loose scale and rust, grout, mortar and other foreign substances immediately before the concrete is placed. Where there is delay in depositing concrete, reinforcement shall be reinspected and, if necessary recleaned.

3.7 EMBEDMENT OF DRILLED REINFORCING STEEL DOWELS

A. Hole Preparation:
   1. The hole diameter shall be as recommended by the epoxy manufacturer but shall be no larger than 0.25 inch greater than the diameter of the outer surface of the reinforcing bar deformations.
   2. The depth of the hole shall be as recommended by the epoxy manufacturer to fully develop the bar but shall not be less than 12 bar diameters, unless noted otherwise.
   3. The hole shall be drilled by methods which do not interfere with the proper bonding of epoxy.
   4. Existing reinforcing steel in the vicinity of proposed holes shall be located prior to drilling. The location of holes to be drilled shall be adjusted to avoid drilling through or nicking any existing reinforcing bars.
   5. The hole shall be blown clean with clean, dry compressed and loose particles.
   6. Epoxy shall be injected into the hole through a tube placed to the bottom of the hole. The tube shall be withdrawn as epoxy is placed but kept immersed to prevent

formation of air pockets. The hole shall be filled to a depth that insures that excess material will be expelled from the hole during dowel placement.

7. Dowels shall be twisted during insertion into the partially filled hole so as to guarantee full wetting of the bar surface with epoxy. The bar shall be inserted slowly enough to avoid developing air pockets.

END OF SECTION

SECTION 03290

JOINTS IN CONCRETE

PART 1 - GENERAL

1.1 RELATED DOCUMENTS

A. Drawings and general provisions of the Contract, including General and Supplementary Conditions and Division 01 Specification Sections, apply to this Section.

1.2 SUMMARY

A. This section specifies the construction of the joints in concrete at the locations indicated, complete, in accordance with the Contract Documents.

B. Related Sections include the following:
   1. Division 03 Section "Cast-in-Place Concrete".
   2. Division 03 Section "Concrete Anchorages" for embedded structural anchorages.

1.3 REFERENCE SPECIFICATIONS, CODES, AND STANDARDS

A. Federal Specifications:
   1. TI-S-0227E(3) - Sealing Compound, elastomeric type, Multi-component for Caulking, Sealing, and Glazing Buildings and Other Structures).

B. U.S. Army Corps of Engineers Specifications:
   1. CRD-C572PVC - Waterstop.

C. Commercial Standards:
   1. ASTM A 775 - Specification for Epoxy-Coated Reinforcing Steel Bars.
   2. ASTM C 920 - Specification for Elastomeric Joint Sealants.
   3. ASTM D 412 - Test Methods for Rubber Properties in Tension.
   4. ASTM D 638 - Test Method for Tensile Properties of Plastics.
   5. ASTM D 746 - Test Method for Brittleness Temperature of Plastics and Elastomers by Impact.
   6. ASTM D 747 - Test Method for Apparent Bending Modulus of Plastics by Means of a Cantilever Beam.
   7. ASTM D 1056 – Specification for Flexible Cellular Materials – Sponge or Expanded Rubber.
   8. ASTM D 1752 – Specification for Preformed Sponge Rubber and Cork Expansion Joint Fillers for Concrete Paving and Structural Construction.
   9. ASTM D 2000 - Standard Classification System for Rubber Products in Automotive Applications.
   10. ASTM D 2240 – Test Method for Rubber Property – Durometer Hardness.
   11. ASTM D 2241 – Specification for Poly (Vinyl Chloride) (PVC) Pressure-Rated Pipe

1.4 TYPES OF JOINTS

A. Construction Joints: When fresh concrete is placed against a hardened concrete surface, the joint between the two pours is called a construction joint. Unless otherwise indicated, all joints in water bearing members shall be provided with a waterstop and/or sealant groove of the shape indicated. The surface of the first pour may also be required to receive a coating of bond breaker as indicated.

B. Contraction Joints: Contraction joints are similar to construction joints except that the fresh concrete shall not bond to the hardened surface of the first pour, which shall be coated with a bond breaker. The slab reinforcement shall be stopped 4-1/2 inches from the joint; which is provided with a sleeve-type dowel, to allow shrinkage of the concrete of the second pour. Waterstop and/or sealant groove shall also be provided when indicated.

C. Expansion Joints: To allow the concrete to expand freely, a space is provided between the two pours; the joint shall be formed as indicated. This space is obtained by placing a filler joint material against the first pour, which acts as a form for the second pour. Unless otherwise indicated, all expansion joints in water bearing members shall be provided with a center-bulb type waterstop as indicated.

1. Premolded expansion joint material shall be installed with the edge at the indicated distance below or back from finished concrete surface, and shall have a slightly tapered, dressed, and oiled wood strip secured to or placed at the edge thereof during concrete placement, which shall later be removed to form space for sealing material.
2. The space so formed shall be filled with a joint sealant material as indicated below. In order to keep the two wall or slab elements in line the joint shall also be provided with a sleeve-type dowel as indicated.

D. Control Joints: The function of the control joint is to provide a weaker plane in the concrete, where shrinkage cracks will probably occur. A groove, of the shape and dimensions indicated, is formed or saw-cut in the concrete. This groove is afterward filled with a joint sealant material as indicated below.

1.5 SUBMITTALS

A. Waterstops: Prior to production of the material required under this contract, qualification samples shall be submitted. Such samples shall consist of extruded or molded sections of each size or shape to be used, and shall be accomplished so that the material and workmanship represents in all respects the material to be provided under this contract. The balance of the material to be used under this contract shall not be produced until after the Engineer has reviewed the qualification samples.

B. Joint Sealant: Prior to ordering the sealant material, submit for the Engineer's review sufficient data to show general compliance with the requirements of the Contract Documents.

C. Certified test reports from the sealant manufacturer on the actual batch of material being supplied indicating compliance with the above requirements shall be furnished the Engineer before the sealant is used on the job.

D. Shipping Certification: Furnish written certification from the manufacturer as an integral part of the shipping form, to show that all of the material shipped to this project meets or exceeds

the physical property requirements of the Contract , Documents. Supplier certificates are not acceptable.

E. Joint Location: Submit placement shop drawings showing the location and type of all joints for each structure.

F. Copies of Waterstop Welding Certification to be provided by manufacturer or authorized agent of manufacturer. Every person who is to be involved with waterstop installation is required to have individual Certification on file with Engineer, which states said individuals are certified and trained to install waterstop per manufacturer's recommendations and specifications.

G. Manufacturer's information demonstrati ng compliance of the following with indicated requirements:
   1. Bearing pad.
   2. Neoprene sponge.
   3. Preformed joint filler.
   4. Backing rod.
   5. Bond breaker.
   6. Waterstop.
   7. Slip dowels.
   8. PVC tubing.

1.6 QUALITY CONTROL

A. Waterstop Inspection: It is required that all waterstop field joints shall be subject to rigid inspection, and no such work shall be scheduled or started without having made prior arrangements with the Engineer to provide for the required inspections. Not less than 24 hours' notice shall be given to the Engineer for scheduling such inspections.

B. All field joints in waterstops shall be subject to rigid inspection for misalignment, bubbles, inadequate bond, porosity, cracks, offsets, and other defects which would reduce the potential resistance of the material to water pressure at any point. All defective joints shall be replaced with material which shall pass said inspection, and all faulty material shall be removed from the site and disposed of by the Contractor at no increase in cost to the Owner.

C. The following waterstop defects represent a partial list of defects which shall be grounds for rejection:
   1. Offsets at joints greater than 1/16 inch or 15 percent of material thickness, at any point, whichever is less.
   2. Exterior crack at joint, due to incomplete bond, which is deeper than 1/16 inch or 15 percent of material thickness, at any point, whichever is less.
   3. Any combination of offset or exterior crack which will result in a net reduction in the cross section of the waterstop in excess of 1/16-inch or 15 percent of material thickness at any point, whichever is less.
   4. Misalignment of joint which result in misalignment of the waterstop in excess of ½ inch in 10 feet.
   5. Porosity in the welded joint as evidenced by visual inspection.

6. Bubbles or inadequate bonding which can be detected with a penknife test. If, while prodding the entire joint with the point of a pen knife, the knife breaks through the outer portion of the weld into a bubble, the joint shall be considered defective.
7. Visible signs of separation when the cooled splice is bent by hand at any sharp angle.
8. Any evidence of burned material.

D. Waterstop Samples: Prior to use of the waterstop material in the field, a sample of a prefabricated (shop-made) mitered cross and a tee constructed of each size or shape of material to be used shall be submitted to the Engineer for review. These samples shall be prefabricated (shop-made) so that the material and workmanship represent in all respects the fittings to be provided under this contract. Field samples of prefabricated (shop-made) fittings (cross, tee, etc.) will be selected at random by the Engineer for testing by a laboratory at the Owner's expense. When tested, they shall have a tensile strength across the joints equal to at least 01120 psi.

E. Construction Joint Sealant: Prepare adhesion and cohesion test specimens as indicated, at intervals of 5 working days while sealants are being installed.

F. The sealant material shall show no signs of adhesive or cohesive failure when tested in accordance with the following procedure in laboratory and field tests:
1. Sealant specimen shall be prepared between two concrete blocks (1 inch by 2 inches by 3 inches). Spacing between the blocks shall be 1 inch. Coated spacers (2 inches by 1-1/2 inches by 1/2 inch) shall be used to insure sealant cross-sections of 1/2 inch by 2 inches with a width of 1-inch.
2. Sealant shall be cast and cured according to manufacturer's recommendations except that curing period shall be not less than 24 hours.
3. Following curing period, the gap between blocks shall be widened to 1-1/2 inch. Spacers shall be used to maintain this gap for 24 hours prior to inspection for failure.

1.7 GUARANTEE

A. Furnish a 5-year written guarantee of the entire sealant installation against faulty and/or incompatible materials and workmanship, together with a statement that the Contractor agrees to repair or replace, to the satisfaction of the Owner, at no additional cost to the Owner, any such defective areas which become evident within said 5-year guarantee period.

PART 2 - PRODUCTS

2.1 GENERAL

A. All joint materials in direct contact with water shall be certified as compliant with NSF Standard 61.

2.2 PVC WATERSTOPS

A. General: Waterstops shall be extruded from an elastomeric polyvinyl chloride compound containing the plasticizers, resins, stabilizers, and other materials necessary to meet the

requirements of these Specifications. No reclaimed or scrap material shall be used. Obtain from the waterstop manufacturer and furnish to the Engineer for review, current test reports dated within the last 3 years and a written certification of the manufacturer that the material to be shipped to the job meets the physical requirements as outlined in the U.S. Army Corps of Engineers Specification CRD-C572 and those listed herein.

B. Flatstrip and Center-Bulb Waterstops: Flatstrip and center-bulb waterstops shall be as as manufactured by: Greenstreak Plastic Products Co., St. Louis, Missouri; or equal; provided, that at no place shall the thickness of flat strip waterstops, including the center bulb type, be less than 3/8 inch.

C. Other Types of Waterstops: When other types of waterstops, not listed above are required and indicated, they shall be subjected to the same requirements as those listed herein.

D. Waterstop Testing Requirements: When tested in accordance with the standards, the waterstop material shall meet or exceed the following requirements:

Physical Property, Sheet Material	Value	ASTM Std.
Tensile Strength – min (psi)	2,000	D638, Type IV
Ultimate Elongation – min (%)	350	D638, Type IV
Low Temp Brittleness – max (degree F)	-35	D746
Stiffness in Flexure – min (psi)	600	D747
Accelerated Extraction (CRD-C572)		
Tensile Strength – min (psi)	1,500	D 638, Type IV
Ultimate Elongation – min (%)	300	D 638, Type IV
Effect of Alkalies (CRD-C572)		
Change in Weight (%)	+0.25/-0.10	
Change in Durometer, Shore A	+5	D2240
Finish Waterstop		
Tensile Strength – min (psi)	1,400	D638, Type IV
Ultimate Elongation – min (%)	280	D638, Type IV

2.3 SELF-EXPANDING WATERSTOPS

A. ectangular or trapezoidal strip, butyl rubber with sodium bentonite or other hydrophilic polymers for adhesive bonding to concrete.

1. Available Products: Subject to compliance with requirements, products that may be incorporated into the Work include, but are not limited to, the following:
   a. Volclay Waterstop-RX; Colloid Environmental Technologies Co.
   b. Conseal CS-231; Concrete Sealants Inc.
   c. Swellstop; Greensreak.

B. Bonding agent for hydrophilic waterstop shall be the manufacturer's recommended adhesive for wet, rough concrete.

C. The cross sectional dimensions of the unexpanded waterstop shall be 1 inch by 3/4 inch.

D. The waterstop shall be provided with an adhesive backing which will provide adequate adhesion to concrete surfaces to prevent waterstop displacement during concrete placement.

2.4 JOINT SEALANT

A. Joint sealant shall be polyurethane polymer designed for bonding to concrete which is continuously submerged in water. No material will be acceptable which has an unsatisfactory history as to bond or durability when used in the joints of water retaining structures.

B. Joint sealant material shall meet the following requirements (73 degrees F and 50 percent R.H.):

Work Life	45-180 minutes
Time to Reach 20 Shore “A” Hardness (at 77 degrees F, 200 gr quantity)	24 hours, maximum
Ultimate Hardness (ASTM C 2240)	20-45 Shore “A”
Tensile Strength (ASTM D 412)	200 psi, minimum
Ultimate Elongation (ASTM D 412)	400%, minimum
Tear Resistance (Die C ASTM D 624)	75 lb/in of thickness, minimum
Color	Light Gray

C. All polyurethane sealants for waterstop joints in concrete shall conform to the following requirements:

1. Sealant shall be two-part polyurethane with the physical properties of the cured sealant conforming to or exceeding the requirements of ANSI/ASTM C 920 or Federal Specification TT-S-0227 E(3) for two-part material, as applicable.
2. For vertical joints and overhead horizontal joints, only "nonsag" compounds shall be used; all such compounds shall conform to the requirements of ANSI/ASTM C 920 Class 25, Grade NS, or Federal Specification TT-S-0227 E(3), Type II, Class A.
3. For plane horizontal joints, the self-leveling compounds which meet the requirements of ANSI/ASTM C 920 Class 25, Grade P, or Federal Specification TT-S-0227 E(3), Type I shall be used. For joints subject to either pedestrian or vehicular traffic, a compound providing nontracking characteristics, and having a Shore "A" hardness range of 35 to 45, shall be used.
4. Primer materials, if recommended by the sealant manufacturer, shall conform to the printed recommendations of the sealant manufacturer.

D. All sealants, wherever shown, or required hereunder shall be PSl-270 as manufactured by Polymeric Systems Inc.; Elastothane 227R as manufactured by Pacific Polymers; Sikaflex 2C, as manufactured by Sika Corporation; or equal.

E. Sealants for nonwaterstop joints in concrete shall conform to the requirements of Section 07920 – Joint Sealants.

2.5 JOINT MATERIALS

A. Bearing Pad: Bearing pad to be neoprene conforming to ASTM D 2000 BC 420, 40 durometer hardness unless otherwise indicated.

B. Neoprene Sponge: Sponge to be neoprene, closed-cell, expanded, conforming to ASTM D 1056, Type 2C3-E1.

C. Joint Filler:
   1. Joint filler for expansion joints in waterholding structures shall be neoprene conforming to ASTM D 1056, Type 2Co-E1.
   2. Joint filler material in other locations shall be of the preformed nonextruding type joint filler constructed of cellular neoprene sponge rubber or polyurethane of firm texture. Bituminous fiber type will not be permitted. All nonextruding and resilient-type preformed expansion joint fillers shall conform to the requirements and tests set forth in ASTM D 1752 for Type I, except as otherwise indicated.

2.6 BACKING ROD

A. Backing rod shall be an extruded closed-cell, polyethylene foam rod. The material shall be compatible with the joint sealant material used and shall have a tensile strength of not less than 40 psi and a compression deflection of approximately 25 percent at 8 psi. The rod shall be 1/8 inch larger in diameter than the joint width except that a 1-inch diameter rod shall be used for a 3/4-inch wide joint.

2.7 BOND BREAKER

A. Bond breaker shall be Super Bond Breaker as manufactured by Burke Company, San Mateo, California; Select Cure CRB as manufactured by Select Products Co., Upland, California; or equal. It shall contain a fugitive dye so that areas of application will be readily distinguishable.

2.8 SLIP DOWELS

A. Slip dowels in joints shall be smooth epoxy-coated bars, conforming to ASTM A 775.

2.9 PVC TUBING

A. PVC tubing in joints shall be Sch. SOR 13.5, conforming to ASTM D 2241.

PART 3 - EXECUTION

3.1 GENERAL

A. Waterstops of the type indicated shall be embedded in the concrete across joints as indicated. All waterstops shall be fully continuous for the extent of the joint. Splices necessary to provide such continuity shall be accornplished in conformance to printed instructions of manufacturer of the waterstops, The Contractor shall take suitable precautions and means to support and protect the waterstops during the progress of the Work and repair or replace at its own expense any waterstops damaged during the progress of the Work. All waterstops shall be stored so as to permit free circulation of air around the waterstop material.

B. When any waterstop is installed in the concrete on one side of a joint, while the other half or portion of the waterstop remains exposed to the atmosphere for more than 2 days, suitable precautions shall be taken to shade and protect the exposed waterstop from direct rays of the sun during the entire exposure and until the exposed portion of the waterstop is embedded in concrete.

3.2 SPLICES INWATERSTOPS

A. Splices in waterstops shall be performed by heat sealing the adjacent waterstop sections in accordance with the manufacturer's printed recommendations. It is essential that:
   1. The material not be damaged by heat sealing.
   2. The splices have a tensile strength of not less than 60 percent of the unspliced materials tensile strength.
   3. The continuity of the waterstop ribs and of its tubular center axis be maintained.

B. Butt joints of the ends of two identical waterstop sections may be made while the material is in the forms.

C. All joints with waterstops involving more than two ends to be jointed together, and all joints which involve an angle cut, alignment change, or the joining of two dissimilar waterstop sections shall be prefabricated prior to placement in the forms, allowing not less than 24-inch long strips of waterstop material beyond the joint. Upon being inspected and approved, such prefabricated waterstop joint assemblies shall be installed in the forms and the ends of the 24-inch strips shall be butt welded to the straight run portions of waterstop in place in the forms.

D. Where a centerbulb waterstop intersects and is jointed with a noncenterbulb waterstop, care shall be taken to seal the end of the centerbulb, using additional PVC material if needed.

3.3 JOINT CONSTRUCTION

A. Setting Waterstops: In order to eliminate faulty installation that may result in joint leakage, particular care shall be taken of the correct positioning of the waterstops during installation. Adequate provisions must be made to support and anchor the waterstops during the progress of the Work and to insure the proper embedment in the concrete. The symmetrical halves of the

waterstops shall be equally divided between the concrete pours at the joints. The center axis of the waterstops shall be coincident with the joint openings. Maximum density and imperviousness of the concrete shall be insured by thoroughly working it in the vicinity of all joints.

B. In placing PVC waterstops in the forms, means shall be provided to prevent them from being folded over by the concrete as it is placed. Unless otherwise indicated, all waterstops shall be held in place with light wire ties on 12-inch centers which shall be passed through the edge of the waterstop and tied to the curtain of reinforcing steel. Horizontal waterstops, with their flat face in a vertical plane, shall be held in place with continuous supports to which the top edge of the waterstop shall be tacked. In placing concrete around horizontal waterstops, with their flat face in a horizontal plane, concrete shall be worked under the waterstops by hand so as to avoid the formation of air and rock pockets.

C. In placing centerbulb waterstops in expansion joints, the centerbulb shall be centered on the joint filler material.

D. Waterstop in vertical wall joints shall stop 6 inches from the top of the wall where such waterstop does not connect with any other waterstop and is not to be connected to for a future concrete placement.

E. Joint Location: Construction joints, and other types of joints, shall be provided where indicated. When not indicated, construction joints shall be provided at 25-foot maximum spacing for all concrete construction, unless noted otherwise. Where joints are indicated spaced greater than 50 feet apart, additional joints shall be provided to maintain the 25-foot maximum spacing. The location of all joints, of any type, shall be submitted for acceptance by the Engineer.

F. Joint Preparation: Special care shall be used in preparing concrete surfaces at joints where bonding between two sections of concrete is required. Unless otherwise indicated, such bonding will be required at all horizontal joints in walls. Surfaces shall be prepared in accordance with the requirements of Section 03300 - Cast-in-Place Concrete. Except on horizontal wall construction joints, wall to slab joints or where otherwise indicated, at all joints where waterstops are required, the joint face of the first pour shall be coated with a bond breaker as indicated herein.

G. Construction Joint Sealant: Construction joints in water-bearing floor slabs, and elsewhere as indicated, shall be provided with tapered grooves which shall be filled with a construction joint sealant. The material used for forming the tapered grooves shall be left in the grooves until just before the grooves are cleaned and filled with joint sealant. After removing the forms from the grooves, all laitance and fins shall be removed, and the grooves shall be sand-blasted. The grooves shall be allowed to become thoroughly dry, after which they shall be blown out; immediately thereafter, they shall be primed, bond breaker tape placed in the bottom of the groove, and filled with the construction joint sealant. The primer used shall be supplied by the same manufacturer supplying the sealant. No sealant will be permitted to be used without a primer. Care shall be used to completely fill the sealant grooves. Areas designated to receive a sealant fillet shall be thoroughly cleaned, as outlined for the tapered grooves, prior to application of the sealant.

H. The primer and sealant shall be placed strictly in accordance with the printed recommendations of the manufacturer, taking special care to properly mix the sealant prior to application. The sides of the sealant groove shall not be coated with bond breaker, curing compound, or any other substance which would interfere with proper bonding of the sealant. All sealant shall achieve final cure at least 7 days before the structure is filled with water.

I. All sealant shall be installed by a competent waterproofing specialty contractor who has a successful record of performance in similar installations. Before Work is commenced, the crew doing the Work shall be instructed as to the proper method of application by a representative of the sealant manufacturer:

J. Thorough, uniform mixing of two-part, catalyst-cured materials is essential; special care shall be taken to properly mix the sealer before its application. Before any sealer is placed, arrange to have the crew doing the Work carefully instructed as to the proper method of mixing and application by a representative of the sealant manufacturer.

K. Any joint sealant which, after the manufacturer's recommended curing time for the job conditions of the Work hereunder, fails to fully and properly cure shall be completely removed; the groove shall be thoroughly sandblasted to remove all traces of the uncured or partially cured sealant and primer, and shall be resealed with the indicated joint sealant. All costs of such removal, joint treatment, resealing, and appurtenant work shall be at no additional cost to the Owner.

L. Self-Expanding (Hydrophilic) Waterstop:
   1. Where a hydrophilic waterstop is called for in the Contract Documents, it shall be installed with the manufacturer's instructions and recommendations, except as modified herein.
   2. When requested by the Engineer, the Contractor shall arrange for the manufacturer to furnish technical assistance in the field.
   3. Hydrophilic waterstop shall only be used where complete confinement by concrete is provided. Hydrophilic waterstop shall not be used in expansion or contraction joints nor in the first 6 inches of any intersecting joint.
   4. The hydrophilic waterstop shall be located as near as possible to the center of the joint, and it shall be continuous around the entire joint. The minimum distance from the edge of the waterstop to the face of the member shall be 5 inches.
   5. Where the thickness of the concrete member to be placed on the hydrophilic waterstop is less than 12 inches, the waterstop shall be placed in grooves formed or ground into the concrete. The groove shall be at least 3/4 inch deep and 1- 1/4 inches wide. When placed in the groove, the minimum distance from the edge of the waterstop to the face of the member shall be 2.5 inches.
   6. Where a hydrophilic waterstop is used in combination with PVC waterstop, the hydrophilic waterstop shall overlap the PVC waterstop for a minimum of 6 inches and shall be adhered to PVC waterstop with single component water-swelling sealant as recommended by the manufacturer.
   7. The hydrophilic waterstop shall not be installed where the air temperature falls outside the manufacturer's recommended range.
   8. The concrete surface under the hydrophilic waterstop shall be smooth and uniform. The concrete shall be ground smooth if needed. Alternately, the hydrophilic waterstop shall be bonded to the surface using an epoxy grout which completely fills all voids and

irregularities beneath the waterstop material. Prior to installation, the concrete surface shall be wire brushed to remove any laitance or other materials that may interfere with the bonding of epoxy.

9. The hydrophilic waterstop shall be secured in place with concrete nails and washers at 12-inch maximum spacing. This shall be in addition to the adhesive recommended by the manufacturer.

END OF SECTION

SECTION 03300

CAST-IN-PLACE CONCRETE

PART 1 - GENERAL

1.1 RELATED DOCUMENTS

A. Drawings and general provisions of the Contract, including General and Supplementary Conditions and Division 01 Specification Sections, apply to this Section.

B. ACI Publications as listed throughout. The Contractor must have a current copy of ACI SP-15 "Field Reference Manual" for concrete construction on site.

1.2 SUMMARY

A. The following types of concrete shall be covered in this Section:
   1. Structural Concrete: Concrete to be used in all cases except where noted otherwise in the Contract Documents.
   2. Sitework Concrete: Concrete to be used for curbs, gutters, catch basins, sidewalks, pavements, fence and guard post embedment, underground duct bank encasement and all other concrete appurtenant to electrical facilities unless otherwise shown.
   3. Lean Concrete: Concrete to be used for thrust blocks, anchor blocks, pipe trench cut-off blocks and cradles, where the preceding items are detailed on the Drawings as unreinforced. Concrete to be used as protective cover for dowels intended for future connection.

B. The Contractor shall furnish all materials for concrete in accordance with the provisions of this Section and shall form, mix, place, cure, repair, finish, and do all other work as required to produce finished concrete, in accordance with the requirements of the Contract Documents.

C. Related Sections include the following:
   1. Division 03200 – “Reinforcement Steel”.
   2. Division 03100 – “Concrete Formwork”.
   3. Project "Geotechnical Engineering Report" for subgrade conditions and required preparation.

D. The term "hydraulic structure" used in these Specifications shall refer to environmental engineering concrete structures for the containment, treatment, or transmission of water, wastewater, or other fluids. Concrete mix designs used in hydraulic structures shall also conform to the standards of Class “A” concrete as specified in this project.

1.3 REFERENCE SPECIFICATIONS, CODES, AND STANDARDS

A. Specifications:
   1. ACI 117 - Standard Tolerances for Concrete Construction and Materials.

2. ACI 214 - Recommended Practice for Evaluation of Strength Test Results of Concrete.
3. ACI 301 - Specifications for Structural Concrete for Buildings.
4. ACI 304.2R - Placing Concrete by Pumping Methods.
5. ACI 305R - Hot Weather Concreting.
6. ACI 306.1 - Standard Specification for Cold Weather Concreting.
7. ACI 309 - Consolidation of Concrete.
8. ACI 315 - Details and Detailing of Concrete Reinforcement.
9. ACI 318 - Building Code Requirements for Reinforced Concrete.
10. ACI 350.1 – Hydrostatic Test, HST, for Open or Covered Tanks.
11. ASTM C 31 - Practice for Making and Curing Concrete Test.
12. ASTM C 33 - Specimens in the Field, Specification for Concrete Aggregates.
13. ASTM C 39 - Test Method for Compressive Strength of Cylindrical Concrete Specimens.
14. ASTM C 40 - Test Method for Organic Impurities in Fine Aggregates for Concrete.
15. ASTM C 42 - Test Method of Obtaining and Testing Drilled Cores and Sawed Beams of Concrete.
16. ASTM C 88 - Test Method for Soundness of Aggregates by Use of Sodium Sulfate or Magnesium Sulfate.
17. ASTM C 94 - Specification for Ready-Mixed Concrete.
18. ASTM C 117 - Test Method for Materials Finer than No. 200 Sieve in Mineral Aggregates by Washing.
19. ASTM C 123 - Test Method for Lightweight Pieces in Aggregates.
20. ASTM C 131 - Test Method for Resistance to Degradation of Small-Size Coarse Aggregates by Abrasion and Impact in the Los Angeles Machine.
21. ASTM C 136 - Test Method for Sieve Analysis of Fine and Coarse Aggregates.
22. ASTM C 138 - Test Method for Unit Weight, Yield, and Air Content of Concrete.
23. ASTM C 142 - Test Method for Clay Lumps and Friable Particulates in Aggregates.
24. ASTM C 143 - Test Method for Slump of Hydraulic Cement Concrete.
25. ASTM C 150 - Specification for Portland Cement.
26. ASTM C 156 - Test Method for Water Retention by Concrete Curing Materials.
27. ASTM C 157 - Test Method for Length Change of Hardened Hydraulic Cement Mortar and Concrete.
28. ASTM C 192 - Practice for Making and Curing Concrete Test Specimens in the Laboratory.
29. ASTM C 231 - Test Method for Air Content of Freshly Mixed Concrete by the Pressure Method.
30. ASTM C 260 - Specification for Air-Entraining Admixtures for Concrete.
31. ASTM C 289 - Test Method for Potential Alkali-Silica Reactivity of Aggregates (Chemical Method).
32. ASTM C 309 - Specifications for Liquid Membrane-Forming.
33. ASTM C 494 - Specification for Chemical Admixtures for Concrete.
34. ASTM C 586 - Test Method for Potential Alkali Reactivity of Carbonate Rocks for Concrete Aggregates (Rock Cylinder Method).
35. ASTM C 1077 - Practice for Laboratories Testing Concrete and Concrete Aggregates for use in Construction & Criteria for Laboratory Evaluation.
36. ASTM C 1260 - Test Method for Potential Alkali Reactivity of Aggregates (Mortar-Bar Method).
37. ASTM D 1751 - Specification for Preformed Expansion Joint Fillers for Concrete Paving and Structural Construction (Non-extruding and Resilient Bituminous Types).
38. ASTM D 2419 - Test Method for Sand Equivalent Value of Soils and Fine Aggregate.

39. ASTM E 1745 - Specification for Water Vapor Retarders Used in Contact with Soil or Granular Fill under Concrete Slabs.

1.4 SUBMITTALS

A. Action Submittals:

1. Mix Designs: Prior to beginning the Work and within 14 days of the notice to proceed, submit to the Engineer, for review, preliminary concrete mix designs which shall show the proportions and gradations of all materials proposed for each class and type of concrete specified herein in accordance with Section 01300 "Submittals". The mix design for use in hydraulic structures shall be additionally checked and certified to conform to these specifications by an independent testing laboratory as specified by the Engineer to be in conformance with these Specifications. All costs related to such checking shall be borne by the Contractor at no increased cost to the Owner.
   a. Indicate amounts of mix water to be withheld for later addition at Project site.
   b. Provide concrete shrinkage test data for concrete mixes designs to be used on hydraulic structures.
   c. For concrete mixes other than Class "A" concrete for hydraulic structures, concrete mix designs shall be submitted along with previous compressive strength test data showing compliance in accordance with ACI 318 Chapter 5. If historical mix design test data is not available for these concrete mixes, trial batch mixing shall be performed in accordance with the requirements for concrete for hydraulic structures.
   d. Exception: Concrete shrinkage tests are only required for hydraulic structures.
2. Delivery Tickets (Submitted upon request): Where ready-mix concrete is used, furnish delivery tickets at the time of delivery of each load of concrete. Each ticket shall show the state certified equipment used for measuring and the total quantities, by weight, of cement, sand, each class of aggregate, admixtures, and the amounts of water in the aggregate added at the batching plant, and the amount allowed to be added at the site for the specific design mix. In addition, each ticket shall state the mix number, total yield in cubic yards, and the time of day, to the nearest minute, corresponding to the times when the batch was dispatched, when it left the plant, when it arrived at the site, when unloading began, and when unloading was finished.
3. Furnish the following submittals in accordance with ACI 301 and as required herein:
   a. Mill tests for cement and fly ash.
   b. Admixture certification. Chloride ion content must be included.
   c. Aggregate gradation and certification demonstrating conformance to ASTM C 33 and this Section.
      1) Data submitted shall be obtained from tests performed within three months of the starting date of the Trial Batch and Laboratory Test.
      2) Data shall demonstrate compliance with paragraph 2.1.D.3 below.
4. Materials and methods for curing (include both hot and cold weather provisions).

B. Informational Submittals:

1. Concrete testing agency qualifications.
2. Minutes of Preinstallation Conference.

1.5 CONCRETE CONFERENCE

A. A meeting to review the detailed requirements of the Contractor's proposed concrete design mixes and to determine the procedures for producing proper concrete construction shall be held no later than 14 calendar days after the notice to proceed.

B. All parties involved in the concrete work shall attend the conference, including the following:
   1. Contractor's representative.
   2. Testing laboratory representative.
   3. Concrete subcontractor.
   4. Reinforcing steel subcontractor and detailer.
   5. Concrete supplier.
   6. Admixture manufacturer's representative.
   7. Project Engineer.
   8. Owner’s Field Representative.
   9. Special Inspector.

C. The conference shall be held at a mutually agreed upon time and place. The Engineer shall be notified no less than 5 calendar days prior to the date of the conference.

1.6 QUALITY CONTROL

A. Installer Qualifications: An experienced and qualified installer who has completed concrete Work similar in material, design, and extent to that indicated for this Project and whose work has resulted in construction with a record of successful in-service performance.

B. Manufacturer Qualifications: A firm experienced in manufacturing ready-mixed concrete products complying with ASTM C 94 requirements for production facilities and equipment.
   1. Manufacturer must be certified according to the National Ready Mixed Concrete Association's Certification of Ready Mixed Concrete Production Facilities.

C. Testing Agency Qualifications: An independent testing agency, acceptable to authorities having jurisdiction, qualified according to ASTM C 1077 and ASTM E 329 to conduct the testing indicated, as documented according to ASTM E 548.
   1. Personnel conducting field tests shall be qualified as ACI Concrete Field Testing Technician - Grade 1, according to ACI CP-01 or an approved equivalent certification program.
   2. Personnel performing laboratory tests shall be ACI Concrete Strength Testing Technician and Concrete Laboratory Testing Technician - Grade I. Testing Agency laboratory supervisor shall be an ACI Concrete Laboratory Testing Technician - Grade II.

D. Testing Agency for Trial Mixes and Shrinkage Tests: An independent testing agency qualified and certified to perform the specified concrete tests.
   1. Concrete trial mixes shall be performed by a qualified testing agency or by the same agency performing the concrete shrinkage tests.
   2. Concrete shrinkage test shall be performed a qualified testing agency.

E. Source Limitations: Obtain each type or class of cementitious material of the same brand from the same manufacturer's plant, each aggregate from one source, and each admixture from the same manufacturer.

F. Welding: Qualify procedures and personnel according to AWS D1.4, "Structural Welding Code--Reinforcing Steel."

G. Testing:

1. General:
   a. Tests on component materials and for compressive strength and shrinkage of concrete will be performed as specified herein. Test for determining slump will be in accordance with the requirements of ASTM C 143.
   b. The cost of all laboratory tests for qualification of mix designs on cement, aggregates, and concrete, including strength and shrinkage testing will be borne by the Contractor. The cost of all field testing during construction on cement, aggregate and subsequent concrete including strength and shrinkage will be borne by the Contractor. Also, the Contractor will be charged for the cost of any additional tests and investigation on work performed which does not meet the Specifications. The laboratory must meet or exceed the requirements of ASTM C 1077.
   c. Concrete for testing shall be supplied by the Contractor at no cost to the Owner, and the Contractor shall provide assistance to the Engineer in obtaining samples, and disposal and cleanup of excess material.
2. Field Compression Tests:
   a. Compression test specimens will be taken during construction from the first placement of each class of concrete specified herein and at intervals thereafter as specified in Section 3.16 “Field Quality Control” to ensure continued compliance with these Specifications. Samples for concrete testing shall be taken at point of placement. Each set of test specimens will be a minimum of six cylinders.
   b. Compression test specimens for concrete shall be made in accordance with section 9.2 of ASTM C 31. Specimens shall be 6-inch diameter by 12-inch high cylinders. Specimens may be 4-inch diameter by 8-inch high cylinders when the nominal maximum size of the course aggregate does not exceed 1-inch.
   c. Compression tests shall be performed in accordance with ASTM C 39. One test cylinder will be tested at 7 days, one test at 14 days, and two at 28 days. The remaining cylinders will be held to verify test results, if needed.
3. Evaluation and Acceptance of Concrete:
   a. Evaluation and acceptance of the compressive strength of concrete shall be according to the requirements of ACI 318, Chapter 5 "Concrete Quality," and as specified herein.
   b. A statistical analysis of compression test results will be performed according to the requirements of ACI 214. The standard deviation of the test results shall not exceed 640 psi, when ordered at equivalent water content as estimated by slump.
   c. If any concrete fails to meet these requirements, immediate corrective action shall be taken to increase the compressive strength for all subsequent batches of the type of concrete affected.
   d. When the standard deviation of the test results exceeds 640 psi, the average strength for which the mix is designed shall be increased by an amount necessary to satisfy the statistical requirement that the probability of any test being more than 500 psi below or the average of any three consecutive tests being below the

specified compressive strength is 1 in 100. The required average strength shall be calculated by Criterion No. 3 of ACI 214 using the actual standard of deviation.

e. All concrete which fails to meet the ACI requirements and these Specifications, is subject to removal and replacement at no increase in cost to the Owner.

4. Shrinkage Tests:

a. Drying shrinkage tests will be made for the trial batch specified in the Paragraph in Part 2 entitled "Trial Batch and Laboratory Tests," the first placement of concrete for hydraulic structures, and during construction every 3 months, to insure continued compliance with these Specifications.

b. Drying shrinkage specimens shall be 4-inch by 4-inch by 11-inch prisms with an effective gage length of 10 inches, fabricated, cured, dried and measured in accordance with ASTM C 157 modified as follows: specimens shall be removed from molds at an age of 23 plus and minus 1 hours after trial batching, shall be placed immediately in water at 70 degrees F plus and minus 3 degrees F for at least 30 minutes, and shall be measured within 30 minutes thereafter to determine original length and then submerged in saturated lime water at 73 degrees F plus and minus 3 degrees F. Measurement to determine expansion expressed as a percentage of original length shall be made at age 7 days. This length at age 7 days shall be the base length for drying shrinkage calculations ("0" days drying age). Specimens then shall be stored immediately in a humidity control room maintained at 73 degrees F plus or minus 3 degrees F and 50 percent plus or minus 4 percent relative humidity for the remainder of the test. Measurements to determine shrinkage expressed as percentage of base length shall be made and reported separately for 7, 14, 21, and 28 days of drying after 7 days of moist curing.

c. The drying shrinkage deformation of each specimen shall be computed as the difference between the base length (at "0" days drying age) and the length after drying at each test age. The average drying shrinkage deformation of the specimens shall be computed to the nearest 0.0001 inch at each test age. If the drying shrinkage of any specimen departs from the average of that test age by more than 0.0004 inch, the results obtained from that specimen shall be disregarded. Results of the shrinkage test shall be reported to the nearest 0.001 percent of shrinkage. Compression test specimens shall be taken in each case from the same concrete used for preparing drying shrinkage specimens. These tests shall be considered a part of the normal compression tests for the project. Allowable shrinkage limitations shall be as specified in Part 2, herein.

H. Construction Tolerances: Set and maintain concrete forms and perform finishing operations so as to ensure that the completed Work is within the tolerances specified herein. Surface defects and irregularities are defined as finishes and are to be distinguished from tolerances. Tolerance is the specified permissible variation from lines, grades, or dimensions shown. Where tolerances are not stated in the Specifications, permissible deviations will be in accordance with ACI 117.

1. The following non-cumulative construction tolerances are hereby established and apply to finished walls and slab unless otherwise shown:

Item	Tolerance
Variation of the constructed linear outline from the established position in plan.	in 10 feet: 1/4 inch; In 20 feet or more: 1/2 inch
Variation from the level or from the grades shown.	in 10 feet: 1/4 inch; In 20 feet or more: 1/2 inch
Variation from the plumb.	In 10 feet: 1/4 inch; In 20 feet or more: 1/2 inch
Variation in the thickness of slabs and walls.	Minus 1/4 inch; Plus 1/2 inch
Variations in the locations and sizes of slabs and wall openings.	Plus or Minus 1/4 inch

PART 2 - PRODUCTS

2.1 CONCRETE MATERIALS

A. General:

1. Materials shall be delivered, stored, and handled so as to prevent damage by water or breakage. Only one brand of cement shall be used. Cement reclaimed from cleaning bags or leaking containers shall not be used. All cement shall be used in the sequence of receipt of shipments.

B. All materials furnished for the Work shall comply with the requirements of Sections 201, 203, and 204 of ACI 301, as applicable.

C. Storage of materials shall conform to the requirements of Section 205 of ACI 301, Sections 01.03.02 and 501.03.03 or the Standard Specifications.

D. Materials for concrete shall conform to the following requirements:

1. Cement shall be standard brand portland cement conforming to ASTM C 150 for Type I, Type II, or Type III as indicated. A minimum of 85 percent of cement by weight shall pass a 325 screen. A single brand of cement shall be used throughout the Work, and prior to its use, the brand shall be acceptable to the Engineer. The cement shall be suitably protected from exposure to moisture until used. Cement that has become lumpy shall not be used. Sacked cement shall be stored in such a manner so as to permit access for inspection and sampling. Certified mill test reports, including fineness, for each shipment of cement to be used shall be submitted to the Engineer if requested regarding compliance with these Specifications.
2. Fly Ash: At the contractor's option, fly ash may be incorporated into the concrete mix designs at a maximum rate of 25% of the cementitious material by weight. Fly ash shall conform to ASTM C 618, Class F, except loss on ignition less than 1.0 percent and calcium oxide content less than 30 percent.

3. Water for mixing and curing shall be potable, clean, and free from objectionable quantities of silty organic matter, alkali, salts and other impurities. The water shall be considered potable, for the purposes of this Section only, if it meets the requirements of the local governmental agencies. Agricultural water with high total dissolved solids (over 1,000 mg/l TDS) shall not be used.
4. Aggregates shall be obtained from pits acceptable to the Engineer, shall be nonreactive, and shall conform to the requirements of ASTM C 33. Maximum size of coarse aggregate shall be as indicated herein. Lightweight sand for fine aggregate will not be permitted.
   a. Coarse aggregates shall consist of clean, hard, durable gravel, crushed gravel, crushed rock or a combination thereof. The coarse aggregates shall be prepared and handled in two or more size groups for combined aggregates with a maximum size greater than 3/4 inch. When the aggregates are proportioned for each batch of concrete the two size groups shall be combined. See the Paragraph in Part 2 entitled "Trial Batch and Laboratory Tests" for the use of the size groups.
   b. Fine aggregates shall be natural sand or a combination of natural and manufactured sand that are hard and durable. Aggregate shall be tested in accordance with ASTM D 2419 to show conformance to ASTM C 33 for sand equivalency. Gradation of fine aggregate shall conform to ASTM C 33. Aggregates shall show compliance with ASTM C 33 when tested in accordance with ASTM C 136 for the fineness modulus of the sand used.
   c. Combined aggregates shall be well graded from course to fine sizes, and shall be uniformly graded between screen sizes to produce a concrete that has optimum workability and consolidation characteristics. Where a trial batch is required for a mix design, the final combined aggregate gradations will be established during the trial batch process.
   d. Fine and coarse aggregates shall be tested in accordance with ASTM C 289 or ASTM C 1260 to show compliance with ASTM C 33 for reactivity and the aggregates shall be non-reactive.
   e. The fine and coarse aggregates shall be tested in accordance with ASTM C 586 to show compliance with ASTM C 33 for reactivity and shall be non-reactive.
   f. The fine aggregate shall be tested in accordance with ASTM C 40 to show compliance ASTM C 33 for organic impurities.
   g. The fine and coarse aggregate shall be tested in accordance with ASTM C 88 to show compliance with ASTM C 33.
   h. The fine and coarse aggregate shall be tested in accordance with ASTM C 142 to show compliance with ASTM C 33.
   i. The fine and coarse aggregate shall be tested in accordance with ASTM C 123 to show compliance with ASTM C 33.
   j. The fine and coarse aggregate shall be tested in accordance with ASTM C 117 to show compliance with ASTM C 33.
   k. The coarse aggregate shall be tested in accordance with ASTM C 131 to show compliance with ASTM C 33.
   l. In addition to initial aggregate testing, each type of aggregate shall be tested at no increased cost to the Owner for conformance to ASTM C 33 under any of the following conditions:
      1) Concrete placement extending longer than six months.
      2) There is a noticeable change in aggregate appearance, consistency, or ease of excavatability.
      3) The aggregate supplier changes pits, or locations in the original pit.

m. If the test results fail to meet the requirements of ASTM C 33 and this Section, the Engineer may stop the placement of concrete, and may require additional testing of aggregates or field and trail batch testing of concrete to verify conformance to ASTM C 33 and the strength and shrinkage requirements of this Section.

n. Engineer may conduct any additional testing of aggregates at anytime during the concrete placement period. Depending on the test results, testing cost shall be paid by the Contractor or Owner, according to the General Conditions. If test data fails to conform to ASTM C 33, the Engineer may stop the placement of concrete or take corrective actions as indicated above.

5. Ready-mix concrete shall conform to the requirements of ASTM C 94.

6. Admixtures: All admixtures shall be compatible and by a single manufacturer capable of providing qualified field service representation. Admixtures shall be used in accordance with manufacturer's recommendations. If the use of an admixture is producing an inferior end result, discontinue use of the admixture. Admixtures shall not contain thiocyanates nor more than 0.05 percent chloride ion, and shall be nontoxic after 30 days.

a. Air-entraining agent meeting the requirements of ASTM C 260, shall be used. Sufficient air-entraining agent shall be used to provide a total air content within the ranges indicated, but concrete floors to receive a dry shake floor hardener shall have an air content not to exceed 3 percent. The Engineer and/or Owner reserves the right, at any time, to sample and test the air- entraining agent received on the job. The air-entraining agent shall be added to the batch in a portion of the mixing water. The solution shall be batched by means of a mechanical batcher capable of accurate measurement. Air content shall be tested at the point of placement.

b. Set controlling and water reducing admixtures: Admixtures may be added at the Contractor's option to control the set, effect water reduction, and increase workability. The addition of an admixture shall be at no increase in cost to the Owner. The use of an admixture shall be subject to acceptance by the Engineer. Concrete containing an admixture shall be first placed at a location determined by the Engineer. Admixtures specified herein shall conform to the requirements of ASTM C 494. The required quantity of cement shall be used in the mix regardless of whether or not an admixture is used.

1) Concrete shall not contain more than one water reducing admixture. Concrete containing an admixture shall be first placed at a location determined by the Engineer.

2) Set controlling admixture shall be either with or without water- reducing properties. Where the air temperature at the time of placement is expected to be consistently over 80 degrees F, a set retarding admixture may be used. Where the air temperature at the time of placement is expected to be consistently under 40 degrees F, a noncorrosive, set-accelerating admixture may be used.

3) Normal range water reducer shall conform to ASTM C 494, Type A. The quantity of admixture used and the method of mixing shall be in accordance with the Manufacturer's instructions and recommendations.

4) High range water reducer shall conform to ASTM C 494, Type F or G. High range water reducer shall be added to the concrete after all other ingredients have been mixed and initial slump has been verified. No more than 14 ounces of water reducer per sack of cement shall be used. Water reducer shall be considered as part of the mixing water when calculating water cement ratio.

5) If the high range water reducer is added to the concrete at the jobsite, it may be used in conjunction with the same water reducer added at the batch plant. Concrete shall have a slump of 3 inches \11/2 inch prior to adding the high range water reducing admixture at the jobsite. The high range water reducing admixture shall be accurately measured and pressure injected into the mixer as a single dose by an experienced technician. A standby system shall be provided and tested prior to each day's operation of the jobsite system.

6) Concrete shall be mixed at mixing speed for a minimum of 70 mixer revolutions or 5 minutes after the addition of the high range water reducer.

2.2 CURING MATERIALS

A. Materials for curing concrete as specified herein shall conform to the following requirements and ASTM C 309:

1. All curing compounds shall be white pigmented and resin based. Sodium silicate compounds shall not be allowed. Water based resin curing compounds shall be used only where local air quality regulations prohibit the use of a solvent based compound.
2. Polyethylene sheet for use as concrete curing blanket shall be white, and shall have a nominal thickness of 6 mils. The loss of moisture when determined in accordance with the requirements of ASTM C 156 shall not exceed 0.055 grams per square centimeter of surface.
3. Polyethylene-coated waterproof paper sheeting for use as concrete curing blanket shall consist of white polyethylene sheeting free of visible defects, uniform in appearance, having a nominal thickness of 2 mils and permanently bonded to waterproof paper conforming to the requirements of Federal Specification UU-B-790A (1) (2). The loss of moisture, when determined in accordance with the requirements of ASTM C 156, shall not exceed 0.055 gram per square centimeter of surface.
4. Polyethylene-coated burlap for use as concrete curing blanket shall be 4 mils thick, white opaque polyethylene film impregnated or extruded into one side of the burlap. Burlap shall weigh not less than 9 ounces per square yard: The loss of moisture, when determined in accordance with the requirements of ASTM C 156, shall not exceed 0.055 gram per square centimeter of surface.
5. Curing mats for use in Curing Method 6 as specified herein, shall be heavy shag rugs or carpets or cotton mats quilted at 4 inches on center. Curing mats shall weigh a minimum of 12 ounces per square yard when dry.
6. Evaporation retardant shall be compatible with any admixtures used in the fresh concrete mix.

2.3 NONWATERSTOP JOINT MATERIALS

A. Materials for nonwaterstop joints in concrete shall conform to the following requirements:

1. Preformed joint filler shall be a nonextruding, resilient, bituminous type conforming to the requirements of ASTM D 1751.
2. Elastomeric joint sealer shall conform to the requirements of Section 07920 - Sealants and Caulking.

3. Mastic joint sealer shall be a material that does not contain evaporating solvents; that will tenaciously adhere to concrete surfaces; that will remain permanently resilient and pliable; that will not be affected by continuous presence of water and will not in any way contaminate potable water; and that will effectively seal the joints against moisture infiltration even when the joints are subject to movement due to expansion and contraction. The sealer shall be composed of special asphalts or similar materials blended with lubricating and plasticizing agents to form a tough, durable mastic substance containing no volatile oils or lubricants and shall be capable of meeting the test requirements set forth hereinafter, if testing is required by the Engineer.

2.4 MISCELLANEOUS MATERIALS

A. Damproofing agent shall be an asphalt emulsion.

B. Bonding agents shall be epoxy adhesives conforming to the following products for the applications specified:
   1. For bonding freshly-mixed, plastic concrete to hardened concrete, Sikadur 32 Hi-Mod Epoxy Adhesive, as manufactured by Sika Corporation; Concresive Liquid (LPL), as manufactured by Master Builders; BurkEpoxy MV as manufactured by The Burke Company; or equal.
   2. For bonding hardened concrete or masonry to steel, Sikadur 31 Hi-Mod Gel as manufactured by Sika Corporation; BurkEpoxy NS as manufactured by The Burke Company; Concresive Paste (LPL) as manufactured by Master Builders; or equal.

2.5 CONCRETE DESIGN REQUIREMENTS

A. General: Concrete shall be composed of cement, admixtures, aggregates and water. These materials shall be of the qualities specified. The exact proportions in which these materials are to be used for different parts of the Work will be determined by the trial batch for hydraulic structures and previous mix designs and test data for all other classes of concrete unless previous test data is unavailable. In general, the mix shall be designed to produce a concrete capable of being deposited so as to obtain maximum density and minimum shrinkage and, where deposited in forms, to have good consolidation properties and maximum smoothness of surface. The aggregate gradations shall be formulated to provide fresh concrete that will not promote rock pockets around reinforcing steel or embedded items. The proportions shall be changed whenever necessary or desirable to meet the required results at no additional cost to the Owner. All changes shall be subject to review by the Engineer.

B. Cement: Type I/II Portland Cement.

C. Fine Aggregate Composition: In mix designs for structural concrete, the percentage of fine aggregate in total aggregate by weight, shall be as indicated in the following table. For other concrete, the maximum percentage of fine aggregate of total aggregate, by weight, shall not exceed 50.

Fine Aggregate

Fineness Modulus	Maximum Percent
2.7 or less	41
2.7 to 2.8	42
2.8 to 2.9	43
2.9 to 3.1	44

D. Water-Cement (w / c) Ratio and Compressive Strength: The minimum compressive strength and cement content of concrete shall be not less than that specified in the following table.

Type of Work	Min 28-day Compressive Strength (psi)	Max Agg. Size (in)	Min Cement (lb/yd3)	Max w/c (by weight)
Class "A" and Hydraulic Structures*	4,000	3/4	550	0.42
Site Concrete	3,000	3/4	495	0.45
Lean Concrete	2,500	1-1/2	376	0.60

*Total air content of 4.5-7.0%

The Contractor is cautioned that the limiting parameters specified above are not a mix design. Additional cement, water reducing agent, or mix designs may be required to achieve workability demanded by the Contractor's construction methods and aggregates. The Contractor is responsible for any costs associated with furnishing concrete with the required workability.

E. Adjustments to Mix Design: The mixes used shall be changed whenever such change is necessary or desirable to secure the required strength, density, workability, and surface finish and the Contractor shall be entitled to no additional compensation because of such changes.

2.6 CONSISTENCY

A. The quantity of water entering into a batch of concrete shall be just sufficient, with a normal mixing period, to produce a concrete which can be worked properly into place without segregation, and which can be compacted by the vibratory methods herein specified to give the desired density, impermeability and smoothness of surface. The quantity of water shall be changed as necessary, with variations in the nature or moisture content of the aggregates, to maintain uniform production of a desired consistency. The consistency of the concrete in

successive batches shall be determined by slump tests in accordance with ASTM C 143. The slumps shall be as follows:

Type of Work	Slump (in)
All Concrete, unless noted otherwise	3 inches, plus or minus 1 inch
With high-range water reducer added	7 inches, plus or minus 2 inches
Pea gravel mixes (if required)	7 inches, plus or minus 2 inches
Ductbanks	5 inches, plus or minus 1 inch

2.7 TRIAL BATCH AND LABORATORY TESTS

A. Before placing any concrete, a testing laboratory designated by the Engineer shall prepare a trial batch of Class "A" concrete for hydraulic structures and each class of structural concrete that does not have a history of required test data, based on the preliminary concrete mixes submitted by the Contractor. During the trial batch the aggregate proportions may be adjusted by the testing laboratory using the two coarse aggregate size ranges to obtain the required properties. If one size range produces an acceptable mix, a second size range need not be used. Such adjustments shall be considered refinements to the mix design and shall not be the basis for extra compensation to the Contractor. All concrete shall conform to the requirements of this Section, whether the aggregate proportions are from the Contractor's preliminary mix design, or whether the proportions have been adjusted during the trial batch process. The trial batch shall be prepared using the aggregates, cement and admixture proposed for the project. The trial batch materials shall be of a quantity such that the testing laboratory can obtain 3 drying shrinkage, and nine compression test specimens from each batch. The cost of not more than three laboratory trial batch tests for mix designs requiring batch tests will be borne by the Contractor and the Contractor shall furnish and deliver the materials in steel drums at no cost. Any additional trial batch testing required shall be performed by the Contractor at no additional cost to the Owner.

B. The determination of compressive strength will be made by testing 6-inch diameter by 12-inch high cylinders; made, cured and tested in accordance with ASTM C 192 and ASTM C 39. Three compression test cylinders will be tested at 7 days, 3 at 14 days, and 3 at 28 days. The average compressive strength for the three cylinders tested at 28 days for any given trial batch shall not be less than 125 percent of the specified compressive strength.

C. A sieve analysis of the combined aggregate for each trial batch shall be performed according to the requirements of ASTM C 136. Values shall be given for percent passing each sieve. Fine and coarse aggregate shall be tested for compliance with ASTM C 33 and as required herein.

D. Cement shall be tested for compliance with ASTM C 150 and as required herein.

E. See Section 1.6 "Quality Assurance" for qualified testing agency concrete trial batches and shrinkage tests.

2.8 SHRINKAGE LIMITATION

A. The maximum concrete shrinkage for specimens cast in the laboratory from the trial batch, as measured at 21-day drying age or at 28-day drying age shall be 0.036 percent or 0.042 percent, respectively. Use a mix design for construction that has first met the trial batch shrinkage requirements. Shrinkage limitations apply only to structural concrete.

B. The maximum concrete shrinkage for specimens cast in the field shall not exceed the trial batch maximum shrinkage requirement by more than 25 percent.

C. If the required shrinkage limitation is not met during construction, take any or all of the following actions, at no additional cost to the Owner, for securing the specified shrinkage requirements. These actions may include changing the source or aggregates, cement and/or admixtures; reducing water content; washing of aggregate to reduce fines; increasing the number of construction joints; modifying the curing requirements; or other actions designed to minimize shrinkage or the effects of shrinkage.

2.9 MEASUREMENT OF CEMENT AND AGGREGATE

A. The amount of cement and of each separate size of aggregate entering into each batch of concrete shall be determined by direct weighing equipment acceptable to the Engineer.

B. Weighing Tolerances:

Material	**Percent of Total Weight**
Cement	1
Aggregates	3
Admixtures	3

2.10 MEASUREMENT OF WATER

A. The quantity of water entering the mixer shall be measured by a suitable water meter or other measuring device of a type acceptable to the Engineer and capable of measuring the water in variable amounts within a tolerance of one percent. The water feed control mechanism shall be capable of being locked in position so as to deliver constantly any specified amount of water to each batch of concrete. A positive quick-acting valve shall be used for a cut-off in the water line to the mixer. The operating mechanism must be such that leakage will not occur when the valves are closed.

2.11 READY-MIXED CONCRETE

A. At the Contractor's option, ready-mixed concrete may be used meeting the requirements as to materials, batching, mixing, transporting, and placing as specified herein and in accordance with ASTM C 94, including the following supplementary requirements.

B. Ready-mixed concrete shall be delivered to the site of the Work, and discharge shall be completed within one hour after the addition of the cement to the aggregates or before the drum has been revolved 250 revolutions, whichever is first.

C. Truck mixers shall be equipped with electrically-actuated counters by which the number of revolutions of the drum or blades may be readily verified. The counter shall be of the resettable, recording type, and shall be mounted in the driver's cab. The counters shall be actuated at the time of starting mixers at mixing speeds.

D. Each batch of concrete shall be mixed in a truck mixer for not less than 70 revolutions of the drum or blades at the rate of rotation designated by the manufacturer of equipment. Additional mixing, if any, shall be at the speed designated by the manufacturer of the equipment as agitating speed. All materials including mixing water shall be in the mixer drum before actuating the revolution counter for determining the number of revolution of mixing.

E. Truck mixers and their operation shall be such that the concrete throughout the mixed batch as discharged is within acceptable limits of uniformity with respect to consistency, mix, and grading. If slump tests taken at approximately the 1/4 and 3/4 points of the load during discharge give slumps differing by more than one inch when the specified slump is 3 inches or less, or if they differ by more than 2 inches when the specified slump is more than 3 inches, the mixer shall not be used on the Work unless the causing condition is corrected and satisfactory performance is verified by additional slump tests. All mechanical details of the mixer, such as water measuring and discharge apparatus, condition of the blades, speed of rotation, general mechanical condition of the unit, and clearance of the drum, shall be checked before a further attempt to use the unit will be permitted.

F. Each batch of ready-mixed concrete delivered at the job site shall be accompanied by a delivery ticket furnished to the Engineer in accordance with the paragraph in Part 1 entitled "Delivery Tickets."

G. The use of nonagitating equipment for transporting ready-mixed concrete will not be permitted. Combination truck and trailer equipment for transporting ready-mixed concrete will not be permitted. The quality and quantity of materials used in ready-mixed concrete and in batch aggregates shall be subject to continuous inspection at the batching plant by the Engineer.

2.12 LIQUID SLAB SURFACE TREATMENTS (SURFACE APPLIED CONCRETE SEALANT)

A. Penetrating Liquid Floor Treatment: Prepare, apply, and finish penetrating liquid floor treatment according to manufacturer's written instructions.

1. Remove oil, dirt, laitance, and other contaminants and complete surface repairs.
2. Do not apply until concrete has cured at least 28 days.
3. Apply liquid until surface is saturated, scrubbing into surface until a gel forms; rewet; and repeat brooming or scrubbing. Rinse with water; remove excess material until surface is dry. Apply a second coat in a similar manner to provide a smooth and non-porous surface.

2.13 FLOOR HARDENER (SURFACE APPLIED)

A. Surface hardener shall be a light reflective nonoxidizing metallic aggregate dry shake surface hardener.
   1. Surface hardener shall be premeasured, premixed and packaged at the factory.
   2. Apply surface hardener at the manufacturer’s suggested rate for type of application.

B. Curing Compound shall meet the moisture retention requirements of ASTM C 309 and surface hardener manufacturer's recommendations.

C. Monomolecular Film: Evaporation retarder shall be used to aid in maintaining concrete moisture during the early placement stages of plastic concrete. Evaporation retarder shall be as recommended by surface hardener manufacturer.

PART 3 - EXECUTION

3.1 PROPORTIONING AND MIXING

A. Proportioning: Proportioning of the concrete mix shall conform to the requirements of Chapter 3 "Proportioning" of ACI 301.

B. Mixing: Mixing of concrete shall conform to the requirements of Chapter 7 of said ACI 301 Specifications.

C. Slump: Maximum slumps shall be as specified herein.

D. Retempering: Retempering of concrete or mortar which has partially hardened shall not be permitted.

3.2 PREPARATION OF SURFACES FOR CONCRETING

A. General: Earth surfaces shall be thoroughly wetted by sprinkling, prior to the placing of any concrete, and these surfaces shall be kept moist by frequent sprinkling up to the time of placing concrete thereon. The surface shall be free from standing water, mud, and debris at the time of placing concrete.

B. Joints in Concrete: Concrete surfaces upon or against which concrete is to be placed, where the placement of the concrete has been stopped or interrupted so that, as determined by the Engineer, the new concrete cannot be incorporated integrally with that previously placed, are defined as construction joints. The surfaces of horizontal joints shall be given a compacted, roughened surface for good bond. Except where the Drawings call for joint surfaces to be coated, the joint surfaces shall be cleaned of all laitance, loose or defective concrete, foreign material, and roughened to a minimum 1/4- inch amplitude. Such cleaning and roughening shall be accomplished by hydroblasting or sandblasting (exposing aggregate) followed by thorough washing. All pools of water shall be removed from the surface of construction joints before the new concrete is placed.

C. After the surfaces have been prepared all approximately horizontal construction joints shall be covered with a 6-inch lift of a rich pea gravel mix, as specified herein before. The mix shall be placed and spread uniformly. Wall concrete shall follow immediately and shall be placed upon the fresh pea gravel mix.

D. Placing Interruptions: When placing of concrete is to be interrupted long enough for the concrete to take a set, the working face shall be given a shape by the use of forms or other means, that will secure proper union with subsequent Work; provided that construction joints shall be made only where acceptable to the Engineer.

E. Embedded Items: No concrete shall be placed until all formwork, installation of parts to be embedded, reinforcement steel, and preparation of surfaces involved in the placing have been completed and accepted by the Engineer at least 4 hours before placement of concrete. All surfaces of forms and embedded items that have become encrusted with dried grout from concrete previously placed shall be cleaned of all such grout before the surrounding or adjacent concrete is placed.

F. All inserts or other embedded items shall conform to the requirements herein.

G. All reinforcement, anchor bolts, sleeves, inserts, and similar items shall be set and secured in the forms where shown or by shop drawings and shall be acceptable to the Engineer before any concrete is placed. Accuracy of placement is the responsibility of the Contractor.

H. Casting New Concrete Against Old: Where concrete is to be cast against old concrete (any concrete which is greater than 60 days of age), the surface of the old concrete shall be thoroughly cleaned and roughened by hydro-blasting or sandblasting (exposing aggregate). The joint surface shall be coated with an epoxy bonding agent unless indicated otherwise by the Engineer.

I. No concrete shall be placed in any structure until all water entering the space to be filled with concrete has been properly cut off or has been diverted by pipes, or other means, and carried out of the forms, clear of the Work. No concrete shall be deposited underwater nor shall the Contractor allow still water to rise on any concrete until the concrete has attained its initial set. Water shall not be permitted to flow over the surface of any concrete in such manner and at such velocity as will injure the surface finish of the concrete. Pumping or other necessary dewatering operations for removing ground water, if required, will be subject to the review of the Engineer.

J. Corrosion Protection: Pipe, conduit, dowels, and other ferrous items required to be embedded in concrete construction shall be so positioned and supported prior to placement of concrete that there will be a minimum of 2-inch clearance between said items and any part of the concrete reinforcement. Securing such items in position by wiring or welding them to the reinforcement will not be permitted.

K. Openings for pipes, inserts for pipe hangers and brackets, and the setting of anchors shall, where practicable, be provided for during the placing of concrete.

L. Anchor bolts shall be accurately set, and shall be maintained in position by templates while being embedded in concrete.

M. Cleaning: The surfaces of all metal work to be in contact with concrete shall be thoroughly cleaned of all dirt, grease, loose scale and rust, grout, mortar, and other foreign substances immediately before the concrete is placed.

3.3 CONDUITS AND PIPES EMBEDDED IN CONCRETE FLOORS, WALLS AND ROOFS OF STRUCTURES

A. Conduits, pipes, and sleeves of any material not harmful to concrete and within limitations of this Section shall be permitted to be embedded in concrete with approval of the Engineer, provided they are not considered to replace structurally the displaced concrete.

B. Conduits and pipes of aluminum shall not be embedded in structural concrete unless effectively coated or covered to prevent aluminum-concrete reaction or electrolytic action between aluminum and steel.

C. Conduits, pipes, and sleeves passing through a slab, wall, or beam shall not impair significantly the strength of the construction.

D. Conduits and pipe, with their fittings, embedded within a column shall not displace more than 4 percent of the area of cross section on which strength is calculated or which is required for fire protection.

E. Except when drawings for conduits and pipes are approved by the Engineer conduits and pipes embedded within a slab, wall, or beam (other than those merely passing through) shall satisfy the following:
   1. They shall not be larger in outside dimension than 1/3 the overall thickness of slab, wall, or beam in which they are embedded.
   2. They shall not be spaced closer than 3 diameters or widths on center.
   3. They shall not impair significantly the strength of the construction.

F. Conduits, pipes, and sleeves shall be permitted to be considered as replacing structurally in compression the displaced concrete provided:
   1. They are not exposed to rusting or other deterioration.
   2. They are of uncoated or galvanized iron or steel not thinner than standard Schedule 40 steel pipe.
   3. They have a nominal inside diameter not over 2-inches and are spaced not less than 3 diameters on centers.

G. Pipes and fittings shall be designed to resist effects of the materials, pressure, and temperature to which they will be subjected.

H. No liquid, gas, or vapor, except water not exceeding 90 F nor 50 psi pressure, shall placed in the pipes until the concrete has attained its design strength.

I. In solids slabs, piping, unless it is for radiant heating shall be placed between top and bottom reinforcement.

J. Concrete cover for pipes, conduits, and fittings shall not be less than 1-1/2 inch for concrete exposed to earth or weather, nor 3/4 inch for concrete not exposed to weather or in contact with ground.

K. Reinforcement with an area not less than 0.002 times area of concrete section shall be provided normal to piping.

L. Piping and conduit shall be so fabricated and installed that cutting, bending, or displacement of reinforcement from its proper location will not be required.

3.4 HANDLING, TRANSPORTING, AND PLACING

A. General: Placing of concrete shall conform to the applicable requirements of Chapter 8 of ACI 301 and the requirements of this Section. No aluminum materials shall be used in conveying any concrete.

B. Nonconforming Work or Materials: Concrete which upon or before placing is found not to conform to the requirements specified herein shall be rejected and immediately removed from the Work. Concrete that is not placed in accordance with these Specifications, or which is of inferior quality, shall be removed and replaced at no additional expense to the Owner.

C. Unauthorized Placement: No concrete shall be placed except in the presence of duly authorized representative of the Engineer. Notify the Engineer in writing at least 24 hours in advance of placement of any concrete.

D. Placement in Wall Forms: Concrete shall not be dropped through reinforcement steel or into any deep form, nor shall concrete be placed in any form in such a manner as to leave accumulation of mortar on the form surfaces above the placed concrete. In such cases, some means such as the use of hoppers and, if necessary, vertical ducts of canvas, rubber, or metal shall be used for placing concrete in the forms in a manner that it may reach the place of final deposit without separation. In no case shall the free fall of concrete exceed 4 feet below the ends of ducts, chutes, or buggies. Concrete shall be uniformly distributed during the process of depositing and in no case after depositing shall any portion be displaced in the forms more than 6 feet in horizontal direction. Concrete in forms shall be deposited in uniform horizontal layers not deeper than 2 feet; and care shall be taken to avoid inclined layers or inclined construction joints except where such are required for sloping members. Each layer shall be placed while the previous layer is still soft. The rate of placing concrete in forms shall not exceed 5 feet of vertical rise per hour. Sufficient illumination shall be provided in the interior of all forms so that the concrete at the places of deposit is visible from the deck or runway.

E. Casting New Concrete Against Old: An epoxy adhesive bonding agent shall be applied to the old surfaces according to the manufacturer's written recommendations. This provision shall not apply to joints where waterstop is installed; see Section 03290 - Joints in Concrete.

F. Conveyor Belts and Chutes: All ends of chutes, hopper gates, and all other points of concrete discharge throughout the Contractor's conveying, hoisting and placing system shall be so designed and arranged that concrete passing from them will not fall separated into whatever receptacle immediately receives it. Conveyor belts, if used, shall be of a type acceptable to the Engineer. Chutes longer than 50 feet will not be permitted. Minimum slopes of chutes shall be such that concrete of the specified consistency will readily flow in them. If a conveyor belt is used, it shall be wiped clean by a device operated in such a manner that none of the mortar adhering to the belt will be wasted. All conveyor belts and chutes shall be covered.

G. Placement in Slabs: Concrete placed in sloping slabs shall proceed uniformly from the bottom of the slab to the top, for the full width of the placement. As the Work progresses, the concrete shall be vibrated and carefully worked around the slab reinforcement, and the surface of the slab shall be screeded in an up-slope direction.

H. Temperature of Concrete: The temperature of concrete when it is being placed shall be not more than 90 degrees F nor less than 55 degrees F for sections less than 12 inches thick nor less than 50 degrees for all other sections. Concrete ingredients shall not be heated to a temperature higher than that necessary to keep the temperature of the mixed concrete, as placed, from falling below the specified minimum temperature. When the temperature of the concrete is 85 degrees F or above, the time between the introduction of the cement to the aggregates and discharge shall not exceed 45 minutes. If concrete is placed when the weather is such that the temperature of the concrete would exceed 90 degrees F, the Contractor shall employ effective means, such as precooling of aggregates and mixing water using ice or placing at night, as necessary to maintain the temperature of the concrete, as it is placed, below 90 degrees F. The Contractor shall be entitled to no additional compensation on account of the foregoing requirements.

I. Cold Weather Placement:
   1. Placement of concrete shall conform to ACI 306.1 - Standard Specification for Cold Weather Concreting, and the following.
   2. Remove all snow, ice and frost from the surfaces, including reinforcement, against which concrete is to be placed. Before beginning concrete placement, thaw the subgrade to a minimum depth of 6 inches. All reinforcement and embedded items shall be warmed to above 32 degrees F prior to concrete placement.
   3. Maintain the concrete temperature above 50 degrees F for at least 3 days after placement.

J. Hot Weather Placement:
   1. Placement of concrete shall conform to ACI 305R - Hot Weather Concreting, and the following.
   2. Only set retarding admixture shall be used in concrete when air temperature is expected to be consistently over 80 degrees F.
   3. The maximum temperature of concrete shall not exceed 90 degrees F immediately before placement.
   4. From the initial placement to the curing state, concrete shall be protected from the adverse effect of high temperature, low humidity, and wind.

3.5 PUMPING OF CONCRETE

A. General: If the pumped concrete does not produce satisfactory end results, discontinue the pumping operation and proceed with the placing of concrete using conventional methods.

B. Pumping Equipment: The pumping equipment must have two cylinders and be designed to operate with one cylinder only in case the other one is not functioning. In lieu of this requirement, the Contractor may have a standby pump on the site during pumping.

C. The minimum diameter of the hose (conduits) shall be in accordance with ACI 304.2R.

D. Pumping equipment and hoses (conduits) that are not functioning properly shall be replaced.

E. Aluminum conduits for conveying the concrete shall not be permitted.

F. Field Control: Concrete samples for slump, air content, and test cylinders will be taken at the placement (discharge) end of the line.

3.6 ORDER OF PLACING CONCRETE

A. The order of placing concrete in all parts of the Work shall be acceptable to the Engineer. In order to minimize the effects of shrinkage, the concrete shall be placed in units as bounded by construction joints shown. The placing of units shall be done by placing alternate units in a manner such that each unit placed shall have cured at least 7 days for hydraulic structures and 3 days for all other structures before the contiguous unit or units are placed, except that the corner sections of vertical walls shall not be placed until the two adjacent wall panels have cured at least 14 days for hydraulic structures and 7 days for all other structures.

B. The surface of the concrete shall be level whenever a run of concrete is stopped. To ensure a level, straight joint on the exposed surface of walls, a wood strip at least 3/4-inch-thick shall be tacked to the forms on these surfaces. The concrete shall be carried about 1/2 inch above the underside of the strip. About one hour after the concrete is placed, the strip shall be removed and any irregularities in the edge formed by the strip shall be leveled with a trowel and all laitance shall be removed.

3.7 TAMPING AND VIBRATING

A. As concrete is placed in the forms or in excavations, it shall be thoroughly settled and compacted, throughout the entire depth of the layer which is being consolidated, into a dense, homogeneous mass, filling all corners and angles, thoroughly embedding the reinforcement, eliminating rock pockets, and bringing only a slight excess of water to the exposed surface of concrete during placement. Vibrators shall be Group 3 (per ACI 309) high-speed power vibrators (8,000 to 12,000 rpm) of an immersion type in sufficient number and with (at least one) standby units as required. Group 2 vibrators may be used only at specific locations when accepted by the Engineer.

B. Care shall be used in placing concrete around waterstops. The concrete shall be carefully worked by rodding and vibrating to make sure that all air and rock pockets have been eliminated. Where flat-strip type waterstops are placed horizontally, the concrete shall be worked under the waterstops by hand, making sure that all air and rock pockets have been eliminated. Concrete surrounding the waterstops shall be given additional vibration, over and above that used for adjacent concrete placement to assure complete embedment of the waterstops in the concrete.

C. Concrete in walls shall be internally vibrated and at the same time rammed, stirred, or worked with suitable appliances, tamping bars, shovels, or forked tools until it completely fills the forms or excavations and closes snugly against all surfaces. Subsequent layers of concrete shall not be placed until the layers previously placed have been worked thoroughly as specified. Vibrators shall be provided in sufficient numbers, with standby units as required, to accomplish the results herein specified within 15 minutes after concrete of the prescribed consistency is placed in the forms. Care shall be taken not to vibrate concrete excessively or to work it in any manner that causes segregation of its constituents.

3.8 FINISHING CONCRETE SURFACES

A. General: Surfaces shall be free from fins, bulges, ridges, offsets, honeycombing, or roughness of any kind, and shall present a finished, smooth, continuous hard surface. Allowable deviations from plumb or level and from the alignment, profiles, and dimensions shown are defined as tolerances and are specified in Part 1, herein. These tolerances are to be distinguished from irregularities in finish as described herein. Aluminum finishing tools shall not be used.

B. Formed Surfaces: No treatment is required after form removal except for curing, repair of defective concrete, and treatment of surface defects. Where architectural finish is required, it shall be as specified or as shown.

1. Surface holes larger than 1/2 inch in diameter or deeper than 1/4-inch are defined as surface defects in basins and exposed walls.

C. Unformed Surfaces: After proper and adequate vibration and tamping, all unformed top surfaces of slabs, floors, walls, and curbs shall be brought to a uniform surface with suitable tools. Immediately after the concrete has been screeded, it shall be treated with a liquid evaporation retardant. The retardant shall be used again after each Work operation as necessary to prevent drying shrinkage cracks. The classes of finish specified for unformed concrete surfaces are designated and defined as follows:

1. Finish U1 - Sufficient leveling and screeding to produce an even, uniform surface with surface irregularities not to exceed 3/8 inch. No further special finish is required.
2. Finish U2 - After sufficient stiffening of the screeded concrete, surfaces shall be float finished with wood or metal floats or with a finishing machine using float blades. Excessive floating of surfaces while the concrete is plastic and dusting of dry cement and sand on the concrete surface to absorb excess moisture will not be permitted. Floating shall be the minimum necessary to produce a surface that is free from screed marks and is uniform in texture. Surface irregularities shall not exceed 1/4-inch. Joints and edges shall be tooled where shown or as determined by the Engineer.
3. Finish U3 - After the floated surface (as specified for Finish U2) has hardened sufficiently to prevent excess of fine material from being drawn to the surface, steel troweling shall be performed with firm pressure such as will flatten the sandy texture of the floated surface and produce a dense, uniform surface free from blemishes, ripples, and trowel marks. The finish shall be smooth and free of all irregularities.
4. Finish. U4 - Steel trowel finish (as specified for Finish U3) without local depressions or high points. In addition, the surface shall be given a light hairbroom finish with brooming perpendicular to drainage unless otherwise shown. The resulting surface shall be rough enough to provide a nonskid finish.

D. Unformed surfaces shall be finished according to the following Schedule:

3.9 UNFORMED SURFACE FINISH SCHEDULE

Area	Finish
Grade slabs and foundations to be covered with concrete or fill material.	U1
Floors to be covered with grouted tile or topping grout.	U2
Slabs which are water bearing with slopes 10% and less.*	U3
Sloping slabs which are water bearing with slopes greater than 10%.	U4
Slabs not water bearing.	U4
Interior slabs and floors to receive architectural finish.	U3
Top surface of exposed walls.	U3

**Floor Finish for Concrete Evap Basin*

A. Floor Hardener (Surface Applied):

1. Where hardener for floors is indicated, provide concrete with the following additional requirements:
   a. Maximum slump of 4 inches when peak ambient temperatures are expected to be more than 65 degrees F, and no more than 3 inches when ambient temperatures are below 65 degrees F.
   b. Maximum air content of 3 percent.
   c. Do not use calcium chloride or set-accelerating admixtures containing calcium chloride.
   d. Do not use admixtures that increase bleeding.
   e. Do not use fly ash unless fly ash is shown to not negatively impact the selected manufacturer's surface applied hardener.
2. After the concrete has been leveled and as soon as the concrete will support an operator and machine without disturbing the level or working up excessive fines, float the surface of the slab with a mechanical float fitted with float shoes. Following floating, apply 1/2 to 2/3 of the total amount of dry shake surface hardener so that a uniform distribution of surface hardener is obtained. The use of a mechanical spreader is recommended. Once the shake has absorbed sufficient moisture (indicated by the darkening of the shake), float the surface. Immediately apply the remaining 1/3 to 1/2 of the shake and allow to absorb moisture. Do not place dry shake on concrete surface when bleed water is present.
3. Use finishing machines with detachable float shoes. Compact surface by a third mechanical floating if time and setting characteristics of the concrete will allow. Do not add water to the surface.
4. As surface further stiffens, indicated by loss of sheen, hand or mechanically trowel with blades set relatively flat. Remove all marks and pinholes in the final raised trowel operation.
5. Follow all application instructions of the floor surface hardener manufacturer.
6. Cure finished floors using fill-forming curing compound recommended by surface hardener manufacturer. Uniformly apply curing compound over the entire surface at a coverage that will provide moisture retention in excess of the requirements of ASTM C 309. Maintain ambient temperature of 50 degrees F or above during the curing period.
7. Keep floors covered and free of traffic and loads for a minimum of 10 days after completion.

3.10 ARCHITECTURAL FINISH

A. General: Architectural finishes shall be required only where specifically called out on the Drawings. In all other cases, the paragraph above, entitled Finishing Concrete Surfaces, shall apply.

1. Immediately after the forms have been stripped, the concrete surface shall be inspected and any poor joints, voids, rock pockets, or other defective areas shall be repaired and all form-tie holes as shown on architectural drawings.
2. Architectural finishes shall not be applied until the concrete surface has been repaired as required and the concrete has cured at least 14 days.
3. All architecturally treated concrete surfaces shall conform to the accepted sample required herein in texture, color, and quality. It shall be the Contractor's responsibility to maintain and protect the concrete finish.

B. Smooth Concrete Finish:

1. The concrete surface shall be wetted, and a grout shall be applied with a brush. The grout shall be made by mixing one part portland cement and one part of fine sand that will pass a No. 16 sieve with sufficient water to give it the consistency of thick paint. The cement used in said grout shall be 1/2 gray and 1/2 white portland cement, as determined by the Engineer. White portland cement shall be Atlas white, or equal. The freshly applied grout shall be vigorously rubbed into the concrete surface with a wood float filling all small air holes. After all the surface grout had been removed with a steel trowel, the surface shall be allowed to dry and, when dry, shall be vigorously rubbed with burlap to remove completely all surface grout so that there is no visible paint-like film of grout on the concrete. The entire cleaning operation for any area shall be completed the day it is started, and no grout shall be left on the surface overnight.
2. Cleaning operations for any given day shall be terminated at panel joints. It is essential that the various operations be carefully timed to secure the desired effect which is a light-colored concrete surface of uniform color and texture without the appearance of a paint or grout film.
3. In the event that improper manipulation results in an inferior finish, rub such inferior areas with carborundum bricks.
4. Before beginning any of the final treatment on exposed surfaces, treat in a satisfactory manner a trial area of at least 200 square feet in some inconspicuous place selected by the Engineer and shall preserve said trial area undisturbed until completion of the job.

3.11 CURING AND DAMPROOFING

General: All concrete shall be cured for not less than 14 days after placing, in accordance with the methods specified herein for the different parts of the Work, and described in detail in the following paragraphs:

Surface to be Cured or Dampproofed	**Method**
Unstripped forms	1
Wall sections with forms removed	6
Construction joints between footings, or slabs, and walls	2
Encasement concrete and thrust blocks	3
Floor slabs on grade	5
Slabs not on grade	6
All concrete surfaces not specifically indicated in this table	4

A. Method 1: Wooden forms shall be wetted immediately after concrete has been placed and shall be kept wet with water until removed. If steel forms are used the exposed concrete surfaces shall be kept continuously wet until the forms are removed. If forms are removed within 14 days of placing the concrete, curing shall be continued in accordance with Method 6.

B. Method 2: The surface shall be covered with burlap mats which shall be kept wet with water for the duration of the curing period, until the concrete in the walls has been placed. No curing compound shall be applied to surfaces cured under Method 2.

C. Method 3: The surface shall be covered with moist earth not less than 4 hours, nor more than 24 hours, after the concrete is placed. Earthwork operations that may damage the concrete shall not begin until at least 7 days after placement of the concrete.

D. Method 4: The surface shall be sprayed with a liquid curing compound.
   1. It shall be applied in accordance with the manufacturer's printed instructions at a maximum coverage rate of 200 square feet per gallon and in such a manner as to cover the surface with a uniform film which will seal thoroughly.
   2. Where the curing compound method is used, care shall be exercised to avoid damage to the seal during the curing period. Should the seal be damaged or broken before the expiration of the curing period, the break shall be repaired immediately by the application of additional curing compound over the damaged portion.
   3. Wherever curing compound may have been applied by mistake to surfaces against which concrete subsequently is to be placed and to which it is to adhere, said compound shall be entirely removed by wet sandblasting just prior to the placing of new concrete.
   4. Where curing compound is specified, it shall be applied as soon as the concrete has hardened enough to prevent marring on unformed surfaces, and within 2 hours after removal of forms from contact with formed surfaces. Repairs required to be made to formed surfaces shall be made within the 2-hour period; provided, however, that any such repairs which cannot be made with the said 2-hour period shall be delayed until after the curing compound has been applied. When repairs are to be made to an area on which curing compound has been applied, the area involved shall first be wet-sandblasted to remove the curing compound, following which repairs shall be made as specified herein.
   5. At all locations where concrete is placed adjacent to a panel which has been coated with curing compound, the previously coated panel shall have curing compound reapplied to an area within 6 feet of the joint and to any other location where the curing membrane has been disturbed.
   6. Prior to final acceptance of the Work, all visible traces of curing compound shall be removed from all surfaces in such a manner that does not damage surface finish.

E. Method 5:
   1. Until the concrete surface is covered with curing compound, the entire surface shall be kept damp by applying water using nozzles that atomize the flow so that the surface is not marred or washed. The concrete shall be given a coat of curing compound in accordance with Method 4, herein. Not less than 1 hour nor more than 4 hours after the coat of curing compound has been applied, the surface shall be wetted with water delivered through a fog nozzle, and concrete- curing blankets shall be placed on the slabs. The curing blankets shall be polyethylene sheet, polyethylene-coated waterproof paper sheeting or polyethylene-coated burlap. The blankets shall be laid with the edges butted together and with the joints between strips sealed with 2-inch wide strips of sealing tape

or with edges lapped not less than 3 inches and fastened together with a waterproof cement to form a continuous watertight joint.

2. The curing blankets shall be left in place during the 14-day curing period and shall not be removed until after concrete for adjacent Work has been placed. Should the curing blankets become torn or otherwise ineffective, replace damaged sections. During the first 3 days of the curing period, no traffic of any nature and no depositing, temporary or otherwise, of any materials shall be permitted on the curing blankets. During the remainder of the curing period, fool traffic and temporary depositing of materials that impose light pressure will be permitted only on top of plywood sheets 5/8-inch minimum thickness, laid over the curing blanket. Add water under the curing blanket as often as necessary to maintain damp concrete surfaces at all times.

F. Method 6: This method applies to both walls and slabs.

1. The concrete shall be kept continuously wet by the application of water for a minimum period of at least 14 consecutive days beginning immediately after the concrete has reached final set or forms have been removed.
2. Until the concrete surface is covered with the curing medium, the entire surface shall be kept damp by applying water using nozzles that atomize the flow so that the surface is not marred or washed.
3. Heavy curing mats shall be used as a curing medium to retain the moisture during the curing period. The curing medium shall be weighted or otherwise held in place to prevent being dislodged by wind or any other causes and to be substantially in contact with the concrete surface. All edges shall be continuously held in place.
4. The curing blankets and concrete shall be kept continuously wet by the use of sprinklers or other means both during and after normal working hours.
5. Immediately after the application of water has terminated at the end of the curing period, the curing medium shall be removed, any dry spots shall be rewetted, and curing compound shall be immediately applied in accordance with Method 4, herein.
6. Dispose of excess water from the curing operation to avoid damage to the Work. Do not allow excess curing water to saturate subgrades below cast mats and slabs.

G. Dampproofing: The exterior surface of all buried walls of dry areas shall be dampproofed as follows:

1. Immediately after completion of curing the surface shall be sprayed with a dampproofing agent consisting of an asphalt emulsion. Application shall be in two coats. The first coat shall be diluted to 1/2 strength by the addition of water and shall be sprayed on so as to provide a maximum coverage rate of 100 square feet per gallon of dilute solution. The second coat shall consist of an application of the specified material, undiluted, and shall be sprayed on so as to provide a maximum coverage rate of 100 square feet per gallon. Dampproofing material shall be as specified herein.

3.12 PROTECTION

A. Protect all concrete against injury until final acceptance by the Owner.

B. Fresh concrete shall be protected from damage due to rain, hail, sleet, or snow. Provide such protection while the concrete is still plastic and whenever such precipitation is imminent or occurring.

3.13 CURING IN COLD WEATHER

A. Water curing of concrete may be reduced to 6 days during periods when the mean daily temperature in the vicinity of the worksite is less than 40 degrees F; provided that, during the prescribed period of water curing, when temperatures are such that concrete surfaces may freeze, water curing shall be temporarily discontinued.

B. Concrete cured by an application of curing compound will require no additional protection from freezing if the protection at 50 degrees F for 72 hours is obtained by means of approved insulation in contact with the forms or concrete surfaces; otherwise the concrete shall be protected against freezing temperatures for 72 hours immediately following 72 hours' protection at 50 degrees F. Concrete cured by water curing shall be protected against freezing temperatures for 3 days immediately following the 72 hours of protection at 50 degrees F.

C. Discontinuance of protection against freezing temperatures shall be such that the drop in temperature of any portion of the concrete will be gradual and will not exceed 40 degrees F in 24 hours. In the spring, when the mean daily temperature rises above 40 degrees F for more than 3 successive days, the specified 72-hour protection at a temperature not lower than 50 degrees F may be discontinued for as long as the mean daily temperature remains above 40 degrees F; provided that the concrete shall be protected against freezing temperatures for not less than 48 hours after placement.

D. Where artificial heat is employed, special care shall be taken to prevent the concrete from drying. Use of unvented heaters will be permitted only when unformed surfaces of concrete adjacent to the heaters are protected for the first 24 hours from an excessive carbon dioxide atmosphere by application of curing compound; provided, that the use of curing compound for such surfaces is otherwise permitted by these Specifications.

3.14 TREATMENT OF SURFACE DEFECTS

A. As soon as forms are removed, all exposed surfaces shall be carefully examined and any irregularities shall be immediately rubbed or ground in a satisfactory manner in order to secure a smooth, uniform, and continuous surface. Plastering or coating of surfaces to be smoothed will not be permitted. No repairs shall be made until after inspection by the Engineer. In no case will extensive patching of honeycombed concrete be permitted. Concrete containing minor voids, holes, honeycombing, or similar depression defects shall have them repaired as specified herein. Concrete containing extensive voids, holes, honeycombing, or similar depression defects, shall be completely removed and replaced. All repairs and replacements herein specified shall be promptly executed by the Contractor at its own expense.

B. Defective surfaces to be repaired shall be cut back from trueline a minimum depth of 1/2 inch over the entire area. Feathered edges will not be permitted. Where chipping or cutting tools are not required in order to deepen the area properly, the surface shall be prepared for bonding by the removal of all laitance or soft material, and not less than 1/32-inch depth of the surface film from all hard portions, by means of an efficient sandblast. After cutting and sandblasting, the surface shall be wetted sufficiently in advance of shooting with shotcrete or with cement mortar so that while the repair material is being applied, the surfaces under repair will remain moist, but not so wet as to overcome the suction upon which a good bond depends. The material used for repair proposed shall consist of a mixture of one sack of cement to 3 cubic feet of sand. For exposed walls, the cement shall contain

such a proportion of Atlas white portland cement as is required to make the color of the patch match the color of the surrounding concrete.

C. Holes left by tie-rod cones shall be reamed with suitable toothed reamers so as to leave the surfaces of the holes clean and rough. These holes then shall be repaired in an approved manner with dry-packed cement grout. Holes left by form-tying devices having a rectangular cross-section, and other imperfections having a depth greater than their least surface dimension, shall not be reamed but shall be repaired in an approved manner with dry-packed cement grout.

D. All repairs shall be built up and shaped in such a manner that the completed Work will conform to the requirements of this Section, as applicable, using approved methods which will not disturb the bond, cause sagging, or cause horizontal fractures. Surfaces of said repairs shall receive the same kind and amount of curing treatment as required for the concrete in the repaired section.

E. Prior to filling any structure with water, all cracks that may have developed shall be "vee'd" as shown and filled with sealant conforming to the requirements of Section 03290, Joints in Concrete. This repair method shall be done on the water bearing face of members. Prior to backfilling, faces of members in contact with fill, which are not covered with a waterproofing membrane, shall also have cracks repaired as specified herein.

3.15 PATCHING HOLES IN CONCRETE

A. Patching Small Holes:
   1. Holes which are less than 12 inches in their least dimension and extend completely through concrete members, shall be filled as specified herein.
   2. Small holes in members which are water-bearing or in contact with soil or other fill material, shall be filled with nonshrink grout where a face of the member is exposed to view, the nonshrink grout shall be held back 2 inches from the finished surface. The remaining 2 inches shall then be patched according to the paragraph in Part 3 entitled "Treatment of Surface Defects."
   3. Small holes through all other concrete members shall be filled with nonshrink grout, with exposed faces treated as above.

B. Patching Large Holes:
   1. Holes which are larger than 12 inches in their least dimension, shall have a keyway chipped into the edge of the opening all around, unless a formed keyway exists. The holes shall then be filled with concrete as specified herein.
   2. Holes which are larger than 24 inches in their least dimension and which do not have reinforcing steel extending from the existing concrete, shall have reinforcing steel set in grout in drilled holes. The reinforcing added shall match the reinforcing in the existing wall unless shown.
   3. Large holes in members which are water bearing or in contact with soil or other fill, shall have a bentonite type waterstop material placed around the perimeter of the hole as specified in the Section 03290 - Joints in Concrete, unless there is an existing waterstop in place.

3.16 CONTRACTOR’S QC

A. Testing and Inspection Agency: Contractor will engage a qualified independent testing and inspecting agency to sample materials, perform tests, and inspections, and submit reports Sampling and testing for quality control includes items specified below.
   1. The Engineer shall review and approve the Testing Agency qualifications.
   2. The Contractor must advise the Testing and Inspection Agency at least 36 hours in advance of concrete placement.

B. Concrete Testing: Testing of composite samples of fresh concrete obtained according to ASTM C 172 shall be performed according to the following requirements:
   1. Testing Frequency: Obtain at least one composite sample for each 100 cu. yd. or fraction thereof of each concrete mix placed each day.
      a. When frequency of testing will provide fewer than five compressive-strength tests for each concrete mix, testing shall be conducted from at least five randomly selected batches.
   2. Testing Location: Final fresh concrete properties shall be tested and recorded or samples taken at point of use; i.e. test materials as placed after all methods of transportation.
   3. Slump: ASTM C 143; one test at point of placement for each composite sample, but not less than one test for each day's pour of each concrete mix. Perform additional tests when concrete consistency appears to change.
   4. Air Content: ASTM C 231, pressure method, for normal-weight concrete; one test for each composite sample at point of placement, but not less than one test for each day's pour of each concrete mix.
   5. Concrete Temperature: ASTM C 1064; one test hourly when air temperature is 40 deg F (4.4 deg C) and below or when 80 deg F (27 deg C) and above, and one test for each composite sample.
   6. Unit Weight: ASTM C 567, fresh unit weight of concrete; one test for each composite sample at point of placement but not less than one test for each day's pour of each concrete mix.
   7. Compression Test Specimens: ASTM C 31/C 31M; cast; from material at point of placement, and laboratory cure one set of six standard cylinder specimens for each composite sample.

C. The concrete testing Technician must immediately inform the Contractor's Project Superintendent of sample test results.
   1. Concrete incorporated in the Work that does not comply with all specified fresh concrete properties is subject to rejection and replacement at the Contractor's expense.

D. Test results shall be reported in writing to Owner, Engineer, Concrete Manufacturer, and Contractor within 48 hours of testing. Reports of tests shall contain Project identification name and number, date of concrete placement, name of concrete testing and inspecting agency, location of concrete batch in Work by grid designation and elevation, design compressive strength at 28 days, concrete mix proportions and materials, compressive breaking strength, and type of break for 28 day tests.

E. Nondestructive Testing: Impact hammer, sonoscope, or other nondestructive device may be permitted by Engineer but will not be used as sole basis for approval or rejection of concrete.

F. Additional Tests: Testing and inspecting agency shall make additional tests of concrete when test results indicate that slump, air entrainment, compressive strengths, or other requirements have not been met, as directed by Engineer. Testing and inspecting agency may conduct tests to

determine adequacy of concrete by cored cylinders complying with ASTM C 42 or by other methods as approved by the Engineer.

G. Owner may also engage a second, independent Testing Agency to verify concrete test results. This independent Testing Agency shall meet all of the requirements of this Specification and shall also have access to the project site and materials as detailed in this Specification.

3.17 CARE AND REPAIR OF CONCRETE

A. Protect all concrete against injury or damage from excessive heat, lack of moisture, overstress, or any other cause until final acceptance by the Owner. Particular care shall be taken to prevent the drying of concrete and to avoid roughening or otherwise damaging the surface. Any concrete found to be damaged, or which may have been originally defective, or which becomes defective at any time prior to the final acceptance of the completed Work, or which departs from the established line or grade, or which, for any other reason, does not conform to the requirements of the Contract Documents, shall be satisfactorily repaired or removed and replaced with acceptable concrete at the Contractor's expense.

END OF SECTION

SECTION 03315

GROUT

PART 1 - GENERAL

1.1 RELATED DOCUMENTS

A. Drawings and general provisions of the Contract, including General and Supplementary Conditions and Division 01 Specification Sections, apply to this Section.

1.2 SUMMARY

A. Section Includes:
   1. Nonshrink Grout: This type of grout is to be used wherever grout is shown in the Contract Documents, unless another type is specifically referenced.
   2. Cement Grout.
   3. Epoxy Grout.
   4. Pump and Motor Grout.
   5. Topping Grout and Concrete Fill.
   6. For grout used in the embedment liner installation refer to Section 02644, HDPE Embedment Liner, and the applicable sections herein.

B. Related Requirements:
   1. Section 04810 “Concrete Unit Masonry”.

1.3 INFORMATION SUBMITTALS

A. Submit certified test results verifying the compressive strength, shrinkage, and expansion requirements indicated herein; and manufacturer's literature containing instructions and recommendations on the mixing, handling, placement and appropriate uses for each type of nonshrink and epoxy grout used in the Work.

B. Provide Manufacturer's independent certification of ASTM C1107, "Standard Specification for Packaged Dry, Hydraulic-Cement Grout (Nonshrink)," compliance without modification of the standard methods certifying that the Class B or C grouts post hardening non-shrink properties are not based on gas expansion, grouts have strengths of 3500 psi at 1day, 6500 psi at 3 days and 7500 psi at 28 days when cured at 72 degrees F as well as meeting the 3,7 and 28 day strengths when tested and cured at the 45 degree and 95 degree limits and all other requirements of ASTM C 1107.

1.4 QUALITY CONTROL

A. Field Tests:

1. Compression test specimens will be taken during construction from the first placement of each type of grout. The specimens will be made by the Engineer or its representative.
2. Compression tests and fabrication of specimens for cement grout and nonshrink grout will be performed as specified in ASTM C 109 at intervals during construction as selected by the Engineer. A set of three specimens will be made for testing at 7 days, 28 days, and each additional time period as appropriate.
3. Compression tests and fabrication of specimens for epoxy grout will be performed as specified in ASTM C 579, Method B, at intervals during construction as selected by the Engineer. A set of three specimens will be made for testing at 7 days, and each earlier time period as appropriate.
4. All grout, already placed, which fails to meet the requirements of these Specifications, is subject to removal and replacement at no additional cost to the Owner.
5. The Cost of all laboratory tests on grout will be borne by the Owner, but the Contractor shall assist the Engineer in obtaining specimens for testing. However, the Contractor shall be responsible, without additional cost to the Owner, for the cost of any additional tests and investigation on work performed which does not comply with the Specifications. The Contractor shall supply all materials necessary for fabricating the test specimens.

B. Construction Tolerances: Construction tolerances shall be as specified in the Section 03300 - Cast-in-Place Concrete, except as modified herein and elsewhere in the Contract Documents.

PART 2 - PRODUCTS

2.1 CEMENT GROUT

A. Cement Grout: Cement grout shall be composed of one-part cement, three parts sand, and the minimum amount of water necessary to obtain the desired consistency. Where needed to match the color of adjacent concrete, white Portland cement shall be blended with regular cement as needed. The minimum compressive strength at 28 days shall be 4,000 psi.

B. Cement grout materials shall be as specified in Section 03300 - Cast-in-Place Concrete.

2.2 PREPACKAGED GROUTS

A. Nonshrink Grout
1. Non-shrink grout shall be a prepackaged, inorganic, non-gas-liberating, non-metallic, cement-based grout requiring only the addition of water. Cement from kilns burning metal-rich hazardous waste fuel shall not be used. Manufacturer's instructions shall be printed on each bag or other container in which the materials are packaged. The specific formulation for each class of non-shrink grout herein shall be that recommended by the manufacturer for the particular application. All grouts (Grade A, B, C) shall be tested for height change of the hardened grout at 1,3, 14, and 28 days in accordance with ASTM C 1090, "Test Method for Measuring Change in Height of Cylindrical Specimens for Hydraulic-Cement Grout," and shall be tested for compression at 1, 3, 7, and 28 days in accordance with the modified ASTM C109 testing procedure.
2. Class A non-shrink grouts shall have a minimum 28-day compressive strength of 5000 psi and shall meet the requirements of ASTM C 1107 when mixed to a flowable, plastic,

or stiff consistency. When tested in accordance with ASTM C 1090, grout shall have a maximum of 4.0% expansion in the pre-hardened state.

3. Class B or C high precision, fluid, extended working time, non-shrink grouts shall have a minimum 28 day compressive strength of 7500 psi; shall have no shrinkage (0.0 percent) and a maximum 4.0 percent expansion in the plastic state when tested in accordance with ASTM C 827 - Test Method for Early Volume Change of Cementitious Mixtures; and shall have no shrinkage (0.0 percent) and a maximum of 0.2 percent expansion in the hardened state; and when mixed to a fluid consistency of 20 to 30 seconds per ASTM C 939 - Test Method for Flow Grout for Preplaced Aggegrate Concrete (Flow Cone Method) at temperature extremes of 45 to 90 degrees F shall have an extended working time of 30 minutes when tested in accordance with ASTM C 1107.
4. Application:
   a. Class A non-shrink grout shall be used for grouting railing posts in place. Class A non-shrink grout shall not be used for dry packing applications or repair of concrete.
   b. Class B or C non-shrink grout shall be used for grouting under all base plates for structural steel members, grouting under all equipment base plates, and at all locations where grout is required by the Contract Documents except where epoxy grout is specifically required. Class B or C non-shrink grout may be used in place of Class A non-shrink grout for all applications. Class B or C non-shrink grout shall not be used for dry packing applications or repair of concrete.

B. Epoxy Grout:
1. Epoxy grout shall be a pourable, nonshrink, 100 percent solids system. The epoxy grout system shall have three components: resin, hardener, and specially blended aggregate, all premeasured and prepackaged. The resin component shall not contain any nonreactive diluents. Resins containing butyl glycidyl ether (BGE) or other highly volatile and hazardous reactive diluents are not acceptable. Variation of component ratios is not permitted unless specifically recommended by the manufacturer. Manufacturer's instructions shall be printed on each container in which the materials are packaged.
2. Epoxy grouts proposed for use shall have documentation verifying that the components and integrity of the epoxy grout will not be adversely affected by the chemicals used in the treatment process.
3. The chemical formulation of the epoxy grout shall be that recommended by the manufacturer for the particular application.
4. The mixed epoxy grout system shall have a minimum working life of 45 minutes at 75 degrees F.
5. The epoxy grout shall develop a compressive strength of 5,000 psi in 24 hours and 10,000 psi in 7 days when tested in accordance with ASTM C 579, Method B. There shall be no shrinkage (0.0 percent) and a maximum 4.0 percent expansion when tested in accordance with ASTM C 827.
6. The epoxy grout shall exhibit a minimum effective bearing area of 95 percent. This shall be determined by testing in accordance with ASTM C 1339, "Standard Test Method for Flowability and Bearing Area of Chemical-Resistant Polymer Machinery Grouts," for bearing area and flow.
7. The peak exotherm of a 2-inch diameter by 4-inch high cylinder shall not exceed 95 degrees F when tested with 75-degree F material at laboratory temperature. The epoxy grout shall exhibit a maximum thermal coefficient of 30×10^{-6} inches/inch/degree F when tested according to ASTM C 531 or ASTM D 696.

8. Application: Epoxy grout shall be used to embed all anchor bolts and reinforcing steel required to be. set in grout, and for all other applications in the Contract Documents where grout type is not specifically indicated.

C. Grout for Pumps and Motors:

1. Grout for pumps and motors shall be epoxy grouts meeting the following minimum requirements:
   a. Creep shall be less than 0.005 in/in when tested by ASTM C 1181 method. The test shall be at 70 degrees F and 140 degrees F with a load of 400 psi.
   b. Linear shrinkage shall be less than 0.080 percent and thermal expansion less than 17×10^{-6} in/in/degree F when tested by ASTM C 531.
   c. The compressive strength shall be a minimum of 12,000 psi in 7 days when tested by ASTM C 579 Method 8, modified.
   d. Bond strength of grout to portland cement concrete shall be greater than 2,000 psi when using ASTM C 882 test method.
   e. Grout shall pass the thermal compatibility test when overlayed on portland cement concrete using test method ASTM C 884.
   f. Tensile strength and modulus of elasticity shall be determined by ASTM D 638. The tensile strength shall not be less than 1,700 psi and the modulus of elasticity shall not be less than 1.8×10^{6} psi.
   g. Gel time and peak exothermic temperature shall be determined by ASTM D 2471. Peak exothermic temperature shall not exceed 110 degrees F when a specimen 6 inches in diameter by 12 inches high is used. Gel time shall be at least 150 minutes.
   h. The grout shall be suitable for supporting precision machinery subject to high impact and shock loading in industrial environments while exposed to elevated temperatures as high as 150 degrees F, with a load of 2,000 psi.
2. Primer, if required, shall conform to the written recommendations of the grout manufacturer.
3. Surface preparations shall conform to the written recommendations of the grout manufacturer.
4. Placement and Curing
   a. Placement and curing procedures shall be in accordance with the written recommendations of the grout manufacturer.
   b. A grouting performance demonstration/training session shall be conducted by the grout manufacturer's representative prior to foundation and baseplate preparation and the first grouting on site. This training session shall demonstrate proper preparation and installation methods and that the grouting material meets the strength requirements.

D. Grout for Repair of Concrete:

1. Grout for repair of concrete for vertical, overhead, and shotcrete applications shall not produce a vapor barrier, shall be one component, reoplastic, cement based, fiber reinforced, shrinkage compensated, non-expansive, gray concrete product. The grout shall be sprayable, extremely low permeability, sulfate resistant, easy to use and requiring only the addition of water. The grout shall be free of chlorides and other chemicals causing corrosion with the following properties:
   a. Minimum Slant Shear Bond Strength: 3000 psi in 28 days when tested in accordance with ASTM C882, modified.

b. Minimum Compressive strength: 11,000 psi in 28 days when tested in accordance with ASTM C109.
c. Minimum Direct Shear Bond Strength: 650 psi when at 28 days.
d. Minimum Tensile Bond Strength: 700psi in 28 days per ASTM C307.
e. Minimum Flexural Strength: 1300 psi when tested in accordance with ASTM C348.
f. Modules of Elasticity: 5 x 10^8 psi when tested in accordance with ASTM C469.
g. Maximum Rapid Chloride Permeability: 772 coulombs when tested in accordance with ASTM C1202.
h. Manufacturers shall be Master Builders Technologies Co., EMACO.

2. Grout for repair of concrete for horizontal and formed applications shall not produce a vapor barrier, shall be one component, reoplastic, cement based, fiber reinforced, shrinkage compensated, non-expansive, gray concrete product. The grout shall be flowable, extremely low permeability, sulfate resistant, easy to use and requiring only the addition of water. The grout shall be free of chlorides and other chemicals causing corrosion with the following properties:
   a. Minimum Shear Bond Strength: 2150 psi in 7 days when tested in accordance with ASTM C1042.
   b. Minimum Compressive Strength: 6000 psi in 7 days when tested in accordance with ASTM C109.
   c. Minimum Flexural Strength: 770 psi in 28 days when tested in accordance with ASTM c 78.
   d. Maximum Chloride Permeability: 1,000 coulombs when tested in accordance with ASTM C1202.
   e. Minimum Modulus of Elasticity: 4.8 x 10^6 psi when tested in accordance with ASTM C469.
   f. Manufacturers shall be Master Builders Technologies Co., EMACO S66-CR.

2.3 TOPPING GROUT AND CONCRETE FILL

A. Grout for topping of slabs and concrete fill for built-up surfaces of tank, channel, and basin bottoms shall be composed of cement, fine aggregate, coarse aggregate, water, and admixtures proportioned and mixed as specified herein. All materials and procedures specified for normal concrete in Section 03300 - Cast-in-Place Concrete, shall apply except as noted otherwise herein.

B. Topping grout and concrete fill shall contain a minimum of 564 pounds of cement per cubic yard with a maximum water cement ratio of 0.45. Where concrete fill is thicker than 3 inches, sitework concrete, as specified in Section 03300, Cast-in-Place Concrete, may be used when accepted by the Engineer.

C. Coarse aggregate shall be graded as follows:

U.S. Standard Sieve Size	**Percent by Weight Passing**
2"	100
3/8"	90 - 100
No. 4	20 - 55
No. 8	5 - 30
No. 16	0 - 10
No. 30	0

D. Final mix design shall be as determined by trial mix design under supervision of the approved testing laboratory.

E. Strength: Minimum compressive strength of topping grout and concrete fill at the end of 28 days shall be 3,000 psi.

2.4 CURING MATERIALS

A. Curing materials shall be as specified in Section 03300 -Cast-in-Place Concrete for cement grout and as recommended by the manufacturer of prepackaged grouts.

2.5 CONSISTENCY

A. The consistency of grouts shall be that necessary to completely fill the space to be grouted for the particular application. Dry pack consistency is such that the grout is plastic and moldable but will not flow. Where "dry pack" is called for in the Contract Documents, it shall mean a grout of that consistency; the type of grout to be used shall be as indicated herein for the particular application.

B. The slump for topping grout and concrete fill shall be adjusted to match placement and finishing conditions but shall not exceed 4 inches.

2.6 MEASUREMENT OF INGREDIENTS

A. Measurements for cement grout shall be made accurately by volume using containers. Shovel measurement shall not be allowed.

B. Prepackaged grouts shall have ingredients measured by means recommended by the manufacturer.

PART 3 - EXECUTION

3.1 GENERAL

A. All surface preparation, curing, and protection of cement grout shall be as indicated in Section 03300 - Cast-in-Place Concrete. The finish of the grout surface shall match that of the adjacent concrete.

B. The manufacturer of nonshrink grout and epoxy grout shall provide onsite technical assistance upon request.

C. Base concrete or masonry must have attained its design strength before grout is placed, unless authorized by the Engineer.

3.2 MANUFACTURER'S SERVICES

A. The Contractor shall coordinate with the manufacturer all demonstrations, training sessions, and applicable site visits. The grout manufacturer shall conduct onsite, demonstration and training sessions for bleed tests, mixing, flow cone measurements, cube testing, application, and curing for each category and type of grout.

B. Training by the Manufacturer is required for all types of grout installations. The grout manufacturer's representative shall train the Contractor to perform the grout work including mixing of grouts to required consistency, testing, placing, and curing on actual project base plates, tie holes, rock pockets, and other applications.

3.3 GROUTING PROCEDURES

A. Prepackage Grouts: All mixing, surface preparation, handling, placing, consolidation, curing, and other means of execution for prepackaged grouts shall be done according to the instructions and recommendations of the manufacturer.

B. Base Plate Grouting:
   1. For base plates, the original concrete shall be blocked out or finished off a sufficient distance below the plate to provide for a 1-inch thickness of grout or a thickness as indicated on the Drawings.
   2. After the base plate has been set in position at the proper elevation by steel wedges or double nuts on the anchor bolts, the space between the bottom of the plate and the original pour of concrete shall be filled with non-shrink-type grout. The mixture shall be of a trowelable consistency and tamped or rodded solidly into the space between the plate and the base concrete. A backing board or stop shall be provided at the back side of the space to be filled with grout. Where this method of placement is not practical or where required by the Engineer, alternate grouting methods shall be submitted for acceptance by the Engineer.

C. Grout for Repair of Concrete:
   1. All repair shall be performed in accordance with the manufacturer's recommendations and with ICRl's Guideline No 03730, "Guide for Surface Preparation for the Repair of Deteriorated Concrete Resulting from Reinforcing Steel Corrosion," and ICRl's Guideline No 03733, "Guide for selecting and specifying Materials for repair of Concrete Surfaces". These guidelines shall be followed for removal geometry, exposing and undercutting of reinforcing steel, cleaning and repair of reinforcing steel, and edge and surface condition of concrete and shall be followed regardless of the amount of corrosion present or not present in the reinforcing steel.
   2. Remove unsound deteriorated concrete from Work by high pressure water blasting machines capable of scoring concrete surfaces to minimum amplitude roughness of 3/16-inch. Remove to provide for minimum thickness specified for mortar. If reinforcing is exposed in this process, then additional concrete shall be removed until the surface is a minimum of 1-inch or 1 bar diameter behind the exposed reinforcing.
   3. Clean exposed reinforcing bars of rust and other deleterious materials which may prevent bonding of the repair product.
   4. Keep surface at saturated surface dry (SSD) condition for a minimum of 24-hours prior to placement of repair material.
   5. Place material in accordance with Manufacturer's written recommendations.

6. Cure material continuously for 7-days with water fog nozzles or other applications which provide a continuous wet curing of the repaired area in accordance with ACI 308, "Standard Practice for Curing Concrete".

3.4 CONSOLIDATION

A. Grout shall be placed in such a manner, for the consistency necessary for each application, so as to assure that the space to be grouted is completely filled.

3.5 REPAIRS AND PROTECTION

A. All grout applications shall be free of any damage, deficiencies, or surficial imperfections at the time of Project completion.

END OF SECTION

DIVISION 5

METALS

SECTION 05521

PIPE AND TUBE RAILINGS

PART 1 - GENERAL

1.1 RELATED DOCUMENTS

A. Drawings and general provisions of the Contract, including General and Supplementary Conditions and Division 01 Specification Sections, apply to this Section.

1.2 SUMMARY

A. Section Includes:
   1. Aluminum pipe and tube railings.

1.3 COORDINATION

A. Coordinate installation of anchorages for railings. Furnish setting drawings, templates, and directions for installing anchorages, including sleeves, concrete inserts, anchor bolts, and items with integral anchors, that are to be embedded in concrete or masonry. Deliver such items to Project site in time for installation.

B. Schedule installation so wall attachments are made only to completed walls. Do not support railings temporarily by any means that do not satisfy structural performance requirements.

1.4 ACTION SUBMITTALS

A. Product Data: For the following:
   1. Manufacturer's product lines of mechanically connected railings.
   2. Railing brackets.
   3. Grout, anchoring cement, and paint products.

B. Shop Drawings: Include plans, elevations, sections, details, and attachments to other work.

C. Delegated-Design Submittal: For railings, including analysis data signed and sealed by the qualified professional engineer responsible for their preparation.

1.5 INFORMATIONAL SUBMITTALS

A. Qualification Data: For testing agency.

B. Welding certificates.

C. Mill Certificates: Signed by manufacturers of aluminum products certifying that products furnished comply with requirements.

D. Product Test Reports: For pipe and tube railings, for tests performed by a qualified testing agency, according to ASTM E 894 and ASTM E 935.

E. Evaluation Reports: For post-installed anchors, from ICC-ES.

1.6 QUALITY ASSURANCE

A. Welding Qualifications: Qualify procedures and personnel according to the following:
   1. AWS D1.2/D1.2M, "Structural Welding Code - Aluminum."

1.7 DELIVERY, STORAGE, AND HANDLING

A. Protect mechanical finishes on exposed surfaces from damage by applying a strippable, temporary protective covering before shipping.

1.8 FIELD CONDITIONS

A. Field Measurements: Verify actual locations of walls and other construction contiguous with metal fabrications by field measurements before fabrication.

PART 2 - PRODUCTS

2.1 PERFORMANCE REQUIREMENTS

A. Delegated Design: Engage a qualified professional engineer, as defined in Section 014000 "Quality Requirements," to design railings, including attachment to building construction.

B. Structural Performance: Railings, including attachment to building construction, shall withstand the effects of gravity loads and the following loads and stresses within limits and under conditions indicated:
   1. Handrails and Top Rails of Guards:
      a. Uniform load of 50 lbf/ ft. (0.73 kN/m) applied in any direction.
      b. Concentrated load of 200 lbf (0.89 kN) applied in any direction.
      c. Uniform and concentrated loads need not be assumed to act concurrently.
   2. Infill of Guards:
      a. Concentrated load of 50 lbf (0.22 kN) applied horizontally on an area of 1 sq. ft. (0.093 sq. m).
      b. Infill load and other loads need not be assumed to act concurrently.

C. Thermal Movements: Allow for thermal movements from ambient and surface temperature changes.

1. Temperature Change: 120 deg F (67 deg C), ambient; 180 deg F (100 deg C, material surfaces).

2.2 METALS, GENERAL

A. Metal Surfaces, General: Provide materials with smooth surfaces, without seam marks, roller marks, rolled trade names, stains, discolorations, or blemishes.

B. Brackets, Flanges, and Anchors: Cast or formed metal of same type of material and finish as supported rails unless otherwise indicated.
   1. Provide type of bracket with predrilled hole for exposed bolt anchorage and that provides 1-1/2-inch (38-mm) clearance from inside face of handrail to finished wall surface.

2.3 ALUMINUM

A. Aluminum, General: Provide alloy and temper recommended by aluminum producer and finisher for type of use and finish indicated, and with not less than the strength and durability properties of alloy and temper designated below for each aluminum form required.

B. Extruded Bars and Tubing: ASTM B 221 (ASTM B 221M), Alloy 6063-T5/T52.

C. Extruded Structural Pipe and Round Tubing: ASTM B 429/B 429M, Alloy 6063-T6.

   1. Provide Standard Weight (Schedule 40) pipe unless otherwise indicated or required by analysis.

D. Drawn Seamless Tubing: ASTM B 210 (ASTM B 210M), Alloy 6063-T832.

E. Plate and Sheet: ASTM B 209 (ASTM B 209M), Alloy 6061-T6.

F. Die and Hand Forgings: ASTM B 247 (ASTM B 247M), Alloy 6061-T6.

G. Castings: ASTM B 26/B 26M, Alloy A356.0-T6.

2.4 FASTENERS

A. General: Provide the following:
   1. Aluminum Railings: Type 304 stainless-steel fasteners.
   2. Provide exposed fasteners with finish matching appearance, including color and texture, of railings.

B. Fasteners for Anchoring Railings to Other Construction: Select fasteners of type, grade, and class required to produce connections suitable for anchoring railings to other types of construction indicated and capable of withstanding design loads.

C. Fasteners for Interconnecting Railing Components:

1. Provide concealed fasteners for interconnecting railing components and for attaching them to other work, unless exposed fasteners are unavoidable or are the standard fastening method for railings indicated.
2. Provide Phillips flat-head machine screws for exposed fasteners unless otherwise indicated.

D. Post-Installed Anchors: Torque-controlled expansion anchors or chemical anchors capable of sustaining, without failure, a load equal to 6 times the load imposed when installed in unit masonry and 4 times the load imposed when installed in concrete, as determined by testing according to ASTM E 488/E 488M, conducted by a qualified independent testing agency.
   1. Material for Interior Locations, Exterior Locations and Where Stainless Steel Is Indicated: Alloy Group 1 (A1) stainless-steel bolts, ASTM F 593 (ASTM F 738M), and nuts, ASTM F 594 (ASTM F 836M).

2.5 MISCELLANEOUS MATERIALS

A. Welding Rods and Bare Electrodes: Select according to AWS specifications for metal alloy welded.

   1. For aluminum railings, provide type and alloy as recommended by producer of metal to be welded and as required for color match, strength, and compatibility in fabricated items.

B. Bituminous Paint: Cold-applied asphalt emulsion complying with ASTM D 1187/D 1187M.

C. Nonshrink, Nonmetallic Grout: Factory-packaged, nonstaining, noncorrosive, nongaseous grout complying with ASTM C 1107/C 1107M. Provide grout specifically recommended by manufacturer for interior and exterior applications.

D. Anchoring Cement: Factory-packaged, nonshrink, nonstaining, hydraulic-controlled expansion cement formulation for mixing with water at Project site to create pourable anchoring, patching, and grouting compound.
   1. Water-Resistant Product: Provide formulation that is resistant to erosion from water exposure without needing protection by a sealer or waterproof coating and that is recommended by manufacturer for exterior use.

2.6 FABRICATION

A. General: Fabricate railings to comply with requirements indicated for design, dimensions, member sizes and spacing, details, finish, and anchorage, but not less than that required to support structural loads.

B. Shop assemble railings to greatest extent possible to minimize field splicing and assembly. Disassemble units only as necessary for shipping and handling limitations. Clearly mark units for reassembly and coordinated installation. Use connections that maintain structural value of joined pieces.

C. Cut, drill, and punch metals cleanly and accurately. Remove burrs and ease edges to a radius of approximately 1/32 inch (1 mm) unless otherwise indicated. Remove sharp or rough areas on exposed surfaces.

D. Form work true to line and level with accurate angles and surfaces.

E. Fabricate connections that are exposed to weather in a manner that excludes water. Provide weep holes where water may accumulate.

F. Cut, reinforce, drill, and tap as indicated to receive finish hardware, screws, and similar items.

G. Connections: Fabricate railings with either welded or nonwelded connections unless otherwise indicated.

H. Welded Connections for Aluminum Pipe: Fabricate railings to interconnect members with concealed internal welds that eliminate surface grinding, using manufacturer's standard system of sleeve and socket fittings.

I. Nonwelded Connections: Connect members with concealed mechanical fasteners and fittings. Fabricate members and fittings to produce flush, smooth, rigid, hairline joints.
   1. Fabricate splice joints for field connection using an epoxy structural adhesive if this is manufacturer's standard splicing method.

J. Form Changes in Direction as Follows:
   1. By bending or by inserting prefabricated elbow fittings.

K. For changes in direction made by bending, use jigs to produce uniform curvature for each repetitive configuration required. Maintain cross section of member throughout entire bend without buckling, twisting, cracking, or otherwise deforming exposed surfaces of components.

L. Close exposed ends of railing members with prefabricated end fittings.

M. Provide wall returns at ends of wall-mounted handrails unless otherwise indicated. Close ends of returns unless clearance between end of rail and wall is 1/4 inch (6 mm) or less.

N. Brackets, Flanges, Fittings, and Anchors: Provide wall brackets, flanges, miscellaneous fittings, and anchors to interconnect railing members to other work unless otherwise indicated.
   1. At brackets and fittings fastened to plaster or gypsum board partitions, provide crush-resistant fillers or other means to transfer loads through wall finishes to structural supports and prevent bracket or fitting rotation and crushing of substrate.

O. Provide inserts and other anchorage devices for connecting railings to concrete or masonry work. Fabricate anchorage devices capable of withstanding loads imposed by railings. Coordinate anchorage devices with supporting structure.

P. For railing posts set in concrete, provide PVC sleeves not less than 6 inches (150 mm) long with inside dimensions not less than 1/2 inch (13 mm) greater than outside dimensions of post, with metal plate forming bottom closure.

Q. For removable railing posts, fabricate slip-fit sockets from stainless-steel tube or pipe whose ID is sized for a close fit with posts; limit movement of post without lateral load, measured at top, to not more than one-fortieth of post height. Provide socket covers designed and fabricated to resist being dislodged.
   1. Provide chain with eye, snap hook, and staple across gaps formed by removable railing sections at locations indicated. Fabricate from same metal as railings.

R. Toe Boards: Where indicated, provide toe boards at railings around openings and at edge of open-sided floors and platforms. Fabricate to dimensions and details indicated.

2.7 ALUMINUM FINISHES

A. Appearance of Finished Work: Variations in appearance of abutting or adjacent pieces are acceptable if they are within one-half of the range of approved Samples. Noticeable variations in the same piece are unacceptable. Variations in appearance of other components are acceptable if they are within the range of approved Samples and are assembled or installed to minimize contrast.

B. Mill Finish: AA-M12, nonspecular as fabricated.

C. Clear Anodic Finish: AAMA 611, AA-M12C22A41.

PART 3 - EXECUTION

3.1 EXAMINATION

A. Examine plaster and gypsum board assemblies, where reinforced to receive anchors, to verify that locations of concealed reinforcements are clearly marked for Installer. Locate reinforcements and mark locations if not already done.

3.2 INSTALLATION, GENERAL

A. Fit exposed connections together to form tight, hairline joints.

B. Perform cutting, drilling, and fitting required for installing railings. Set railings accurately in location, alignment, and elevation; measured from established lines and levels and free of rack.
   1. Do not weld, cut, or abrade surfaces of railing components that are coated or finished after fabrication and that are intended for field connection by mechanical or other means without further cutting or fitting.
   2. Set posts plumb within a tolerance of 1/16 inch in 3 feet (2 mm in 1 m).
   3. Align rails so variations from level for horizontal members and variations from parallel with rake of steps and ramps for sloping members do not exceed 1/4 inch in 12 feet (6 mm in 3.5 m).

C. Control of Corrosion: Prevent galvanic action and other forms of corrosion by insulating metals and other materials from direct contact with incompatible materials.

1. Coat, with a heavy coat of bituminous paint, concealed surfaces of aluminum that are in contact with grout, concrete, masonry, wood, or dissimilar metals.

D. Adjust railings before anchoring to ensure matching alignment at abutting joints.

E. Fastening to In-Place Construction: Use anchorage devices and fasteners where necessary for securing railings and for properly transferring loads to in-place construction.

3.3 RAILING CONNECTIONS

A. Welded Connections: Use fully welded joints for permanently connecting railing components. Comply with requirements for welded connections in "Fabrication" Article whether welding is performed in the shop or in the field.

3.4 ANCHORING POSTS

A. Use PVC sleeves preset and anchored into concrete for installing posts. After posts are inserted into sleeves, fill annular space between post and sleeve with nonshrink, nonmetallic grout or anchoring cement, mixed and placed to comply with anchoring material manufacturer's written instructions.

B. Leave anchorage joint exposed with 1/8-inch (3-mm) buildup, sloped away from post.

C. Anchor posts to metal surfaces with oval flanges, angle type, or floor type as required by conditions, connected to posts and to metal supporting members as follows:
   1. For aluminum pipe railings, attach posts using fittings designed and engineered for this purpose.

D. Install removable railing sections, where indicated, in slip-fit stainless steel sockets cast in concrete.

3.5 ATTACHING RAILINGS

A. Anchor railing ends at walls with round flanges anchored to wall construction and welded to railing ends or connected to railing ends using nonwelded connections.

B. Anchor railing ends to metal surfaces with flanges bolted to metal surfaces and welded to railing ends or connected to railing ends using nonwelded connections.

C. Attach railings to wall with wall brackets, except where end flanges are used. Locate brackets as indicated or, if not indicated, at spacing required to support structural loads.

D. Secure wall brackets and railing end flanges to building construction as follows:
   1. For concrete and solid masonry anchorage, use drilled-in expansion shields and hanger or lag bolts.
   2. For hollow masonry anchorage, use toggle bolts.

3. For steel-framed partitions, use hanger or lag bolts set into wood backing between studs. Coordinate with stud installation to locate backing members.

3.6 ADJUSTING AND CLEANING

A. Clean aluminum by washing thoroughly with clean water and soap and rinsing with clean water.

3.7 PROTECTION

A. Protect finishes of railings from damage during construction period with temporary protective coverings approved by railing manufacturer. Remove protective coverings at time of Substantial Completion.

END OF SECTION

PART 4

CONSTRUCTION PLANS

CAROTHERS ROAD SOLID WASTE FACILITY

CONTACT WATER AND FIRE SUPPRESSION WATER HOLDING TANKS PROJECT

WHITMAN COUNTY, WASHINGTON

BID NO. XEW31

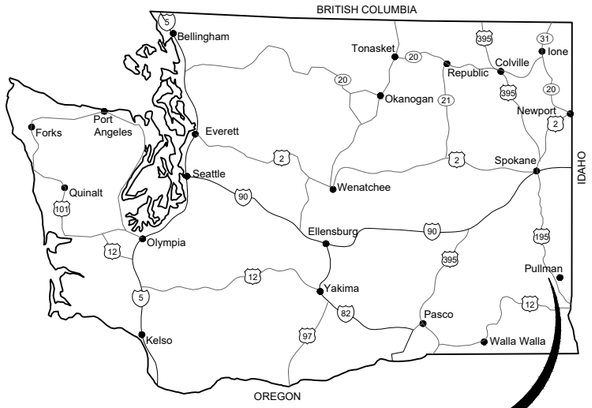

PROJECT LOCATION

SECTION 28, TOWNSHIP 15 N., AND RANGE 44 E.

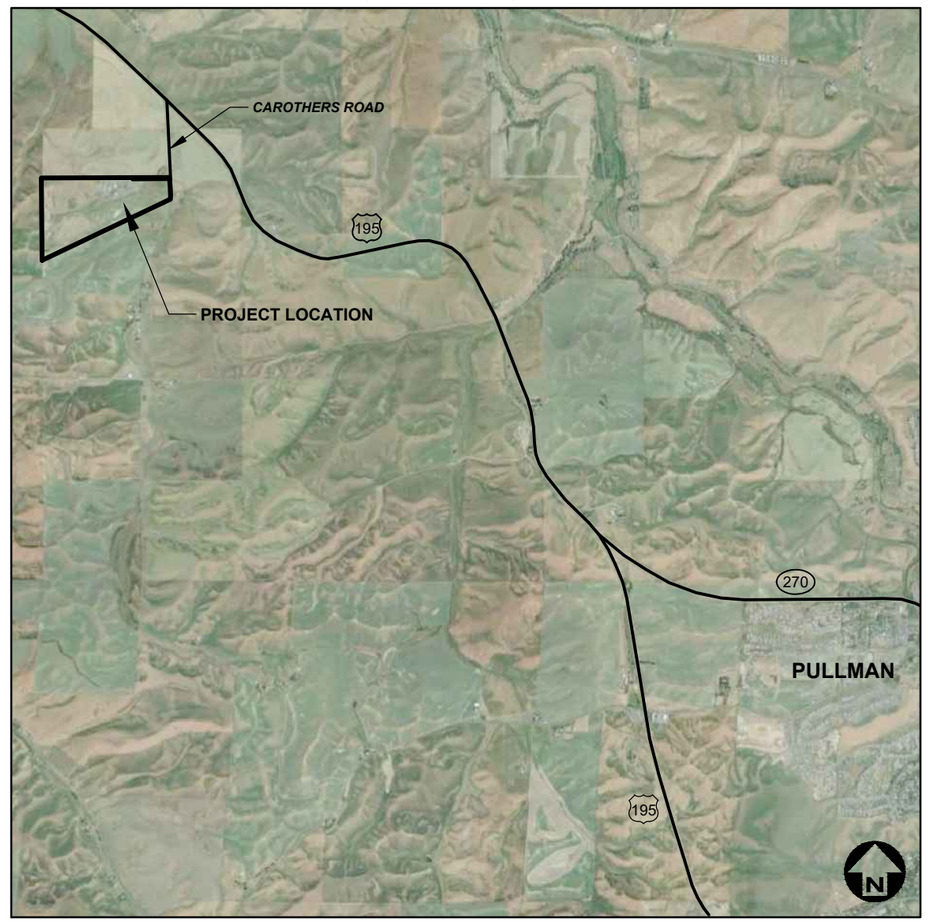

NOT TO SCALE

SHEET INDEX

PROJECT: 4-16108

DATE: MARCH 2017

SHEET 1	COVER
SHEET 2	LEGEND, ABBREVIATIONS AND GENERAL NOTES
SHEET 3	EXISTING SITE CONDITIONS
SHEET 4	DEMOLITION PLAN
SHEET 5	CONTACT WATER TANKS AND EVAPORATION BASIN ENLARGED SITE PLAN
SHEET 6	CONTACT WATER TANKS AND EVAPORATION BASIN SECTION
SHEET 7	FIRE SUPRESSION WATER HOLDING TANK ENLARGED SITE PLAN
SHEET 8	FIRE SUPRESSION WATER HOLDING TANK SECTION
SHEET 9	FINISH GRADING AND DRAINAGE PLAN
SHEET 10	GENERAL DETAILS
SHEET 11	CONTACT WATER LIFT STATION DETAILS
SHEET 12	CONTACT WATER TANK DETAILS
SHEET 13	CONTACT WATER TANK DETAILS
SHEET 14	FIRE SUPRESSION WATER HOLDING TANK DETAILS
SHEET 15	FIRE SUPRESSION WATER HOLDING TANK DETAILS
SHEET 16	BUILDING DRAIN LIFT STATION DETAILS
SHEET 17	EVAPORATION BASIN STRUCTURAL DETAILS
SHEET 18	EVAPORATION BASIN STRUCTURAL DETAILS

PLANS PREPARED FOR:

MARK STOREY, P.E.
COUNTY ENGINEER & PUBLIC WORKS DIRECTOR
WHITMAN COUNTY, WASHINGTON

DAVID NAILS
SOLID WASTE & RECYCLING DIRECTOR
WHITMAN COUNTY, WASHINGTON

APPROVED BY:

TRAVIS A. PYLE, P.E.
GREAT WEST ENGINEERING

TRAVIS A. PYLE
STATE OF WASHINGTON
35820
REGISTERED
PROFESSIONAL ENGINEER
3-17-17

QA/QC BY:

ROBERT E. CHURCH, P.E.
GREAT WEST ENGINEERING

PLANS PREPARED BY:

MICHELLE LANGDON, P.E.
BRET ANDERSON

GreatWest engineering®
3363 N. LAKEHARBOR LANE
BOISE, ID 83703
(208)576-6646

NO.	REVISION DESCRIPTION	BY	DATE
△			
△			
△			
△			
△			
△			

SET NO.

SHEET NO.

1

F:\4-16108-Whitman Co Contact Water Tank Project\CADD 4-16108\Sheets\4-16108-01-Cover.dwg

ABBREVIATIONS

@	AT
Δ	ANGLE OF DEFLECTION, DELTA ANGLE
<PT	ANGLE POINT
AB	ANCHOR BOLT
ABDN	ABANDON
AC	ASBESTOS CONCRETE
ADDN	ADDITIONAL
ADJ	ADJACENT
AFF	ABOVE FINISHED FLOOR
ALT	ALTERNATE
ANSI	AMERICAN NATIONAL STANDARDS INSTITUTE
APPROX	APPROXIMATE
APVD	APPROVED
ARCH	ARCHITECTURE, ARCHITECTURAL
ASPH	ASPHALT
AVE	AVENUE
AVG	AVERAGE
BFV	BUTTERFLY VALVE
BLDG	BUILDING
BLK	BLOCK
BLVD	BOULEVARD
BM	BEAM, BENCHMARK
BOT	BOTTOM
BRG	BEARING
BRKT	BRACKET
BVC	BEGIN VERTICAL CURVE
C–C	CENTER TO CENTER
CHAN	CHANNEL
CHK	CHECK
CI	CAST IRON
CIPC	CAST–IN–PLACE CONCRETE
CIRC	CIRCULAR
CJ	CONSTRUCTION JOINT, CONTROL JOINT
℄	CENTER LINE
CLR	CLEAR, CLEARANCE
CMP	CORRUGATED METAL PIPE
CMU	CONCRETE MASONRY UNITS
CO	CLEANOUT
COL	COLUMN
CONC	CONCRETE
CONSTR	CONSTRUCTION
CONT	CONTINUE, CONTINUED, CONTINUOUS
CONTR	CONTRACTOR
COORD	COORDINATE
CP	CONTROL PANEL, CONTROL POINT
CPLG	COUPLING
CTR	CENTER
CTV	CABLE TELEVISION
CU	CUBIC, COPPER
CF	CUBIC FEET
CULV	CULVERT
CY	CUBIC YARD
DET	DETAIL
DI	DUCTILE IRON, DRAIN INLET
DIA, ø	DIAMETER
DIAG	DIAGONAL
DIM	DIMENSION
DR	DRIVE
DWG	DRAWING
E	EAST
EA	EACH
EL, ELEV	ELEVATION
ELB	ELBOW
ELEC	ELECTRIC, ELECTRICAL
ENCL	ENCLOSE
ENGR	ENGINEER
EOP	EDGE OF PAVEMENT
EQ	EQUAL, EQUALLY
EQ SP	EQUALLY SPACED
EQUIP	EQUIPMENT
EQUIV	EQUIVALENT
EVC	END VERTICAL CURVE
EW	EACH WAY
EXC	EXCAVATE
EXP	EXPANSION
EXP JT	EXPANSION JOINT
EXST	EXISTING
FCV	FLOW CONTROL VALVE
FD	FLOOR DRAIN
FDN	FOUNDATION
FES	FLARED END SECTION
FET	FLARED END TERMINAL
FF	FINISHED FLOOR
FG	FINISH GRADE
FHYD	FIRE HYDRANT
FJ	FLANGE JOINT
FL	FLOW LINE
FLEX	FLEXIBLE
FM	FORCEMAIN
FT	FOOT, FEET
FO	FIBER OPTIC
FTG	FOOTING, FITTING
G	NATURAL GAS
GA	GAGE, GAUGE
GAL	GALLON
GALV	GALVANIZED
GND	GROUND
GVL	GRAVEL
HB	HOSE BIB
HDPE	HIGH DENSITY POLYETHYLENE
HOR, HORIZ	HORIZONTAL
HWY	HIGHWAY
HYD	HYDRANT
ID	INSIDE DIAMETER
IE	INVERT ELEVATION
IN	INCH
INV	INVERT
JB	JUNCTION BOX
JT	JOINT
K	RATE OF VERTICAL CURVATURE
LBS	POUNDS
LF	LINEAR FEET
LN	LANE
LPG	LIQUID PROPANE GAS
LT	LEFT
MAX	MAXIMUM
MD	MEASURE DOWN
MFD	MANUFACTURED
MFR	MANUFACTURE, MANUFACTURER
MH	MANHOLE
MIN	MINIMUM
MISC	MISCELLANEOUS
MJ	MECHANICAL JOINT
MOV	MOTOR OPERATED VALVE
MPWSS	MONTANA PUBLIC WORKS STANDARD SPECIFICATIONS
N	NORTH
NE	NORTHEAST
NG	NATURAL GAS
NIC	NOT IN CONTRACT
NO	NUMBER
NOM	NOMINAL
NTS	NOT TO SCALE
NW	NORTHWEST
OC	ON CENTER
OD	OUTSIDE DIAMETER
OF	OVERFLOW
OH	OVERHEAD
OHP	OVERHEAD POWER
OHT	OVERHEAD TELEPHONE
OPNG	OPENING
PC	POINT OF CURVATURE
PCC	POINT OF COMPOUND CURVATURE
PE	PLAIN END, POLYETHYLENE
PERP	PERPENDICULAR
PI	POINT OF INTERSECTION
PL	PROPERTY LINE
PNL	PANEL
PRC	POINT OF REVERSE CURVATURE
PREFAB	PREFABRICATED
PRELIM	PRELIMINARY
PREP	PREPARE, PREPARATION
PROP	PROPERTY
PRV	PRESSURE REDUCING VALVE
PSF	POUNDS PER SQUARE FOOT
PSI	POUNDS PER SQUARE INCH
PT	POINT, POINT OF TANGENCY
PVC	POLYVINYL CHLORIDE
PVI	POINT OF VERTICAL INTERSECTION
PVMT	PAVEMENT
R, RAD	RADIUS
RC	REINFORCED CONCRETE
RCP	REINFORCED CONCRETE PIPE
RD	ROAD
RDCR	REDUCER
REBAR	REINFORCEMENT BAR
REF	REFERENCE
REINF	REINFORCE
REQD	REQUIRED
RR	RAILROAD
RST	REINFORCING STEEL
RT	RIGHT
R/W	RIGHT–OF–WAY
S	SOUTH, SANITARY SEWER
SAN	SANITARY
SCH	SCHEDULE
SD	STORM DRAIN
SDWK	SIDEWALK
SE	SOUTHEAST
SECT	SECTION
SF	SQUARE FOOT
SHT	SHEET
SIM	SIMILAR
SLP	SLOPE
SPEC	SPECIFICATION
SQ	SQUARE
SSTL	STAINLESS STEEL
STA	STATION
SS	SANITARY SEWER SERVICE
STD	STANDARD
ST	STREET
STL	STEEL
STRUCT	STRUCTURE
SW	SOUTHWEST
SYM	SYMMETRICAL
TB	THRUST BLOCK
TBC	TOP BACK OF CURB
TBM	TEMPORARY BENCH MARK
TEL	TELEPHONE
TEMP	TEMPORARY
THRU	THROUGH
TYP	TYPICAL
UG	UNDERGROUND
UGP	UNDERGROUND POWER
UGT	UNDERGROUND TELEPHONE
UTIL	UTILITY
V	VALVE, VOLT
VB	VALVE BOX
VERT	VERTICAL
VOL	VOLUME
W	WEST, WATER
WTR	WATER
WD	WOOD
W/	WITH
W/O	WITHOUT
WL	WETLAND
WM	WIRE MESH, WATER METER
WS	WATERSTOP, WATER SURFACE, WATER SERVICE
WT	WEIGHT
WV	WATER VALVE
WWF	WELDED WIRE FABRIC
WWM	WELDED WIRE MESH
XFMR	TRANSFORMER
X–ING	CROSSING
XS	CROSS SECTION
YD	YARD

LEGEND

EXISTING	PROPOSED	DESCRIPTION
		MAJOR CONTOUR
		MINOR CONTOUR
OHT	OHT	OVERHEAD TELEPHONE
UGT	UGT	UNDERGROUND TELEPHONE
CTV	CTV	CABLE TELEVISION
FO	FO	FIBER OPTIC
G	G	NATURAL GAS
OHP	OHP	OVERHEAD POWER
UGP	UGP	UNDERGROUND POWER
S	S	SANITARY SEWER
SS	SS	SANITARY SEWER SERVICE
FM	FM	SANITARY SEWER FORCEMAIN
SD	SD	STORM DRAIN
		STORM CULVERT
W	W	WATER
WS	WS	WATER SERVICE
CW	CW	CONTACT WATER
UD	UD	UNDERDRAIN
		CHAINLINK FENCE
X	X	BARBED WIRE FENCE
		WOOD FENCE
		PAVED ROAD
		GRAVEL ROAD
		PROPERTY/LOT LINE
		PROPERTY EASEMENT
		CITY LIMIT/DISTRICT BOUNDARY
		RAILROAD
		DITCH
		WATER EDGE
WL		WETLAND
		BUILDING
		BENCHMARK
		CONTROL POINT
		PROPERTY PIN
		BORING
		MONITORING WELL
		TEST PIT
		BOLLARD
		MAIL BOX
		SIGN

EXISTING	PROPOSED	DESCRIPTION
		STUMP
		SHRUB/BUSH
		TREE–CONIFER
		TREE–DECIDUOUS
		TREE LINE
		COMMUNICATION MANHOLE
		COMMUNICATION VAULT
		TELEPHONE RISER
		CABLE TV RISER
		NATURAL GAS METER
		NATURAL GAS RISER
		NATURAL GAS VALVE
		LIGHT POLE
		STREET LIGHT POLE
		POWER RISER
		PAD MOUNTED TRANSFORMER
		POWER VAULT
		UTILITY POLE
		GUY WIRE
		SANITARY MANHOLE
		SANITARY CLEANOUT
		SANITARY LAMPHOLE
		STORM MANHOLE
		STORM ROUND INLET
		STORM SQUARE INLET
		STORM CATCH BASIN
		11.25° ELBOW
		22.50° ELBOW
		45° ELBOW
		90° ELBOW
		TEE
		CROSS
		CAP
		FIRE HYDRANT
		GATE VALVE
		REDUCER
		WATER METER
		WELL
		CURB STOP
		FROST FREE HYDRANT

GENERAL NOTES:

1. THIS IS A STANDARD LEGEND AND ABBREVIATION LIST. THEREFORE, NOT ALL SYMBOLS AND ABBREVIATIONS MAY BE USED ON THIS PROJECT.
2. EXISTING UNDERGROUND UTILITIES SHOWN ARE FROM THE BEST INFORMATION AVAILABLE. THIS INFORMATION IS APPROXIMATE AND MAY BE INCOMPLETE. FOR ACCURATE LOCATION, THE CONTRACTOR SHALL CONTACT, PRIOR TO EXCAVATION, THE UTILITIES UNDERGROUND LOCATION CENTER AT: 811.

PROJECT NOTES:

1. SOURCE TOPOGRAPHY SHOWN IS BASED ON SURVEY INFORMATION AND MAPPING PROVIDED BY WHITMAN COUNTY AND AS–BUILT INFORMATION FROM THE NEW WASTE TRANSFER BUILDING (WTB) PROJECT. EXISTING CONDITIONS MAY VARY FROM THOSE SHOWN. THE CONTRACTOR SHALL VERIFY EXISTING CONDITIONS AND ADJUST WORK PLAN ACCORDINGLY PRIOR TO BEGINNING CONSTRUCTION.
2. HORIZONTAL DATUM: SITE SPECIFIC SET AT CP#1.
3. VERTICAL DATUM: NAVD 88.

GENERAL DESIGN DESIGNATIONS:

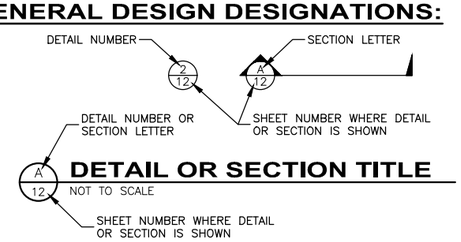

NO.	REVISION DESCRIPTION	BY	DATE

PROJECT: 4-16108
DESIGNED: ML / TAP
DRAWN: ML / BAA
CHECKED: REC
APPROVED: TAP
DATE: MARCH 2017

GreatWest engineering®
3363 N. LAKEHARBOR LANE
BOISE, ID 83703
(208)576-6046

CAROTHERS ROAD SOLID WASTE FACILITY
CONTACT WATER AND FIRE SUPPRESSION WATER HOLDING TANKS PROJECT

LEGEND, ABBREVIATIONS AND GENERAL NOTES

SHEET NO.
2
OF 18

F:\4-16108-Whitman Co Contact Water Tank Project\CADD 4-16108\Sheets\4-16108-02-General.dwg

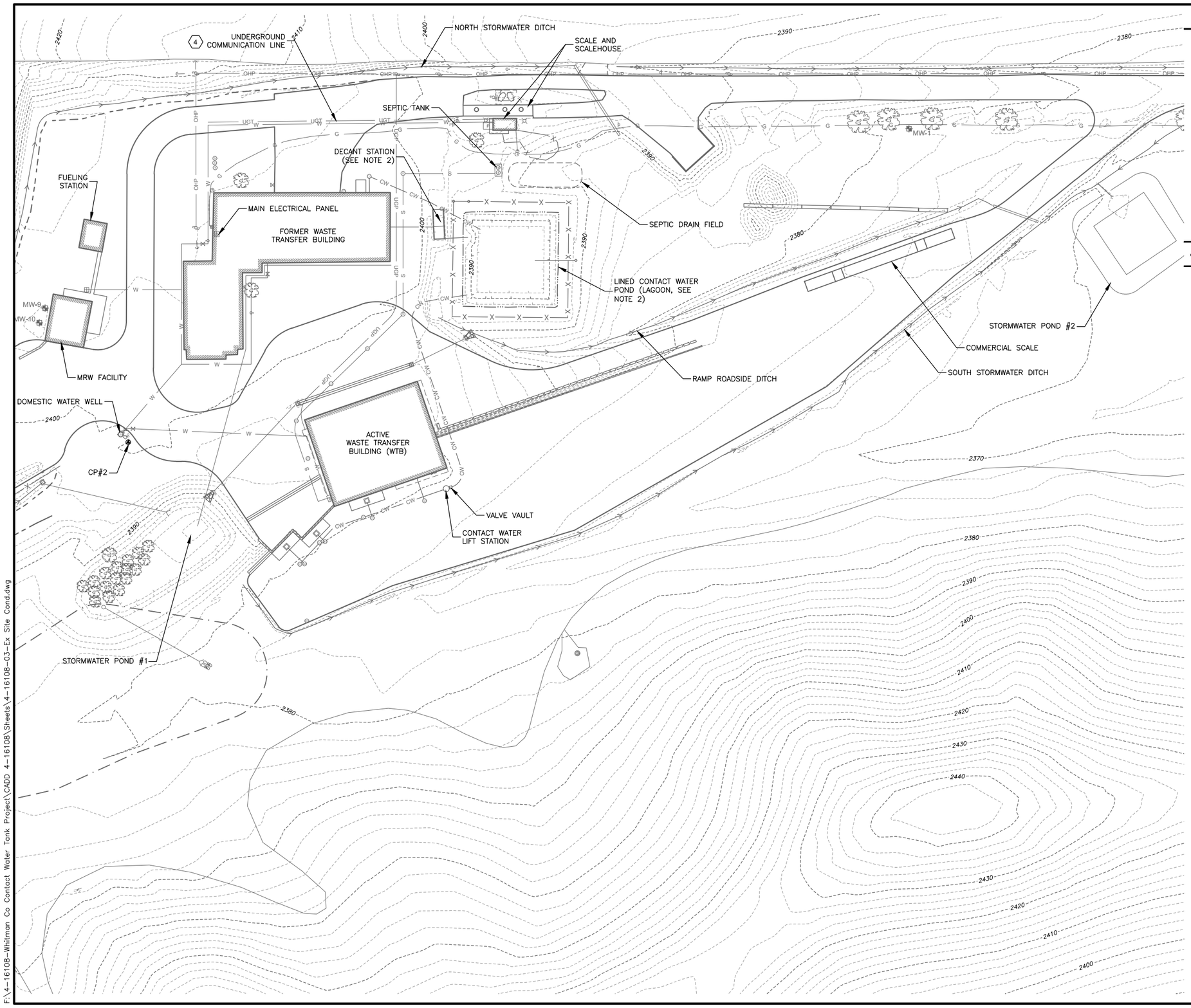

SHEET NOTES

1. SEE SHEET 2 FOR GENERAL PROJECT NOTES.
2. COORDINATE WITH OWNER FOR TURNOVER OF PROJECT AFTER OWNER'S COMPLETION OF SITE PREPARATION AND EARLY EARTHWORK ACTIVITIES.. ALSO COORDINATE WITH OWNER'S SITE ELECTRICIAN TO PROVIDE ELECTRICAL SUPPLY AND CONNECTIONS.

KEYED NOTES

1. A BURIED COMMUNICATION LINE RUNS PARALLEL TO THE WATER LINE. THE EXACT LOCATION OF THE LINE IS UNKNOWN. COORDINATE WORK AROUND THIS LINE WITH OWNER.

PROJECT CONTROL POINTS

ID	NORTHING	EASTING	ELEVATION
CP#1	10,000.00	10,000.00	2,418.94
CP#2	10,444.85	11,573.51	2,399.90

NO.	REVISION DESCRIPTION	BY	DATE

PROJECT: 4-16108
DESIGNED: ML / TAP
DRAWN: ML / BAA
CHECKED: REC
APPROVED: TAP
DATE: MARCH 2017

TRAVIS A. PYLE STATE OF WASHINGTON 38471 REGISTERED PROFESSIONAL ENGINEER 3-17-17

GreatWest engineering®
3363 N. LAKEHARBOR LANE
BOISE, ID 83703
(208)576-6046

CAROTHERS ROAD SOLID WASTE FACILITY
CONTACT WATER AND FIRE SUPPRESSION WATER HOLDING TANKS PROJECT

EXISTING SITE CONDITIONS

SHEET NO.
3
OF 18

F:\4-16108-Whitman Co Contact Water Tank Project\CADD 4-16108\Sheets\4-16108-03-Ex Site Cond.dwg

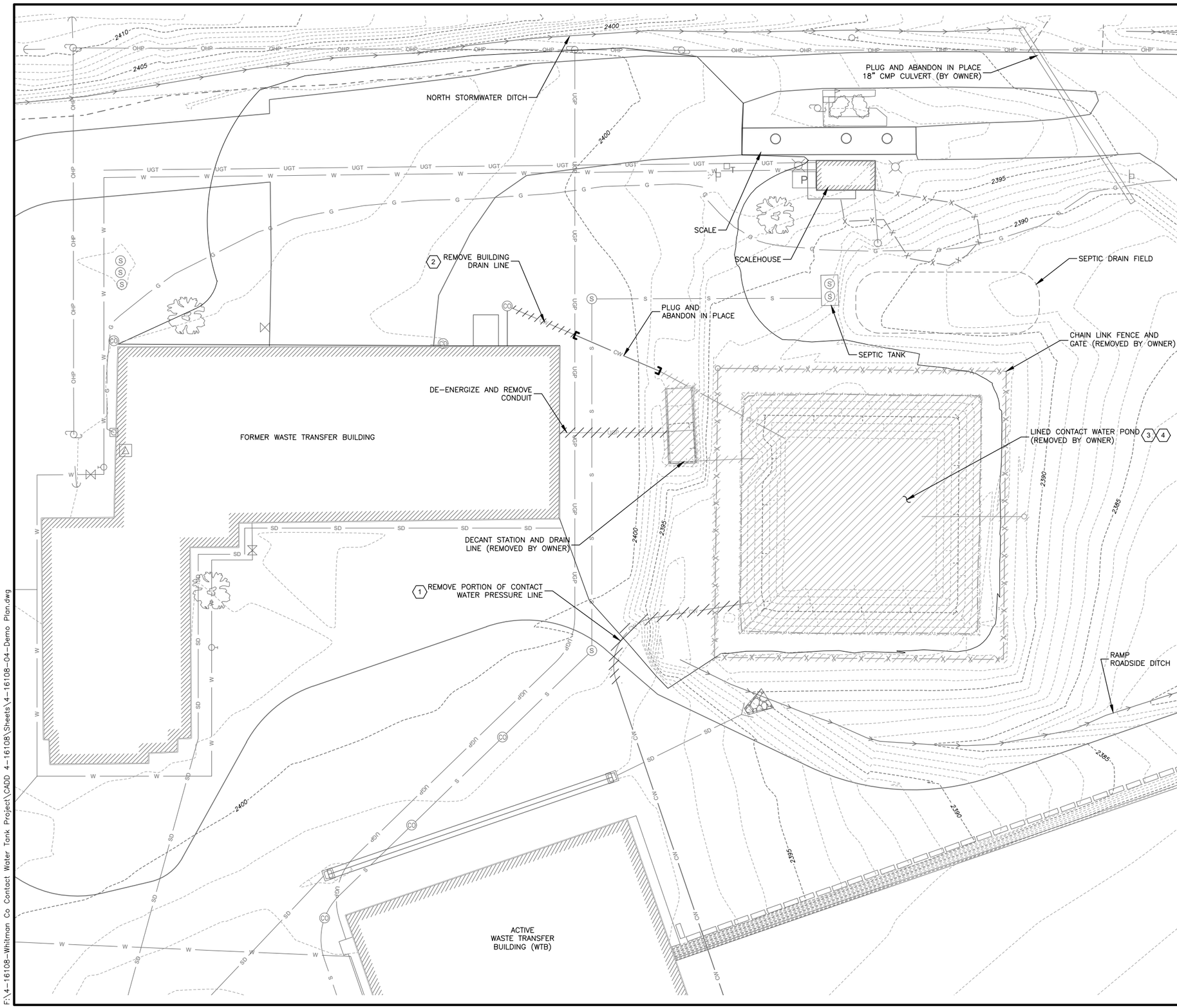

SHEET NOTES

1. SEE SHEET 2 FOR GENERAL PROJECT NOTES.

KEYED NOTES

1. REMOVE PORTION OF EXISTING CONTACT WATER PRESSURE LINE AND REINSTALL AND EXTEND AS SHOWN ON SHEET 5. IN-FILL AND RE-GRADE AS SHOWN ON SHEET 9 AFTER NEW PIPE INSTALLATION.
2. REMOVE EXISTING BUILDING DRAIN LINE AND REPLACE WITH LIFT STATION AND PIPE AS SHOWN ON SHEET 5. IN-FILL AND RE-GRADE AS SHOWN ON SHEET 9 AFTER NEW PIPE INSTALLATION.
3. PROVIDE 500 GALLON TEMPORARY TANK FOR STORAGE OF CONTACT WATER UNTIL NEW SYSTEM IS IN-PLACE AND OPERATIONAL AS APPROVED BY ENGINEER. COORDINATE WITH OWNER FOR LOCATION. CONTRACTOR SHALL HAUL OFF CONTACT WATER FOR PROPER DISPOSAL AND MANAGE TANK THROUGH PROJECT DURATION.
4. OWNER TO PREPARE SUBGRADE IN AREA OF CONTACT WATER TANKS AND INSTALL UNDERDRAIN LINE AS SHOWN ON SHEET 5.

NO.	REVISION DESCRIPTION	BY	DATE

PROJECT: 4-16108
DESIGNED: ML / TAP
DRAWN: ML / BAA
CHECKED: REC
APPROVED: TAP
DATE: MARCH 2017

GreatWest engineering®
3363 N. LAKEHARBOR LANE
BOISE, ID 83703
(208)576-6046

CAROTHERS ROAD SOLID WASTE FACILITY
CONTACT WATER AND FIRE SUPPRESSION WATER HOLDING TANKS PROJECT
DEMOLITION PLAN

SHEET NO.
4
OF 18

F:\4-16108-Whitman Co Contact Water Tank Project\CADD 4-16108\Sheets\4-16108-04-Demo Plan.dwg

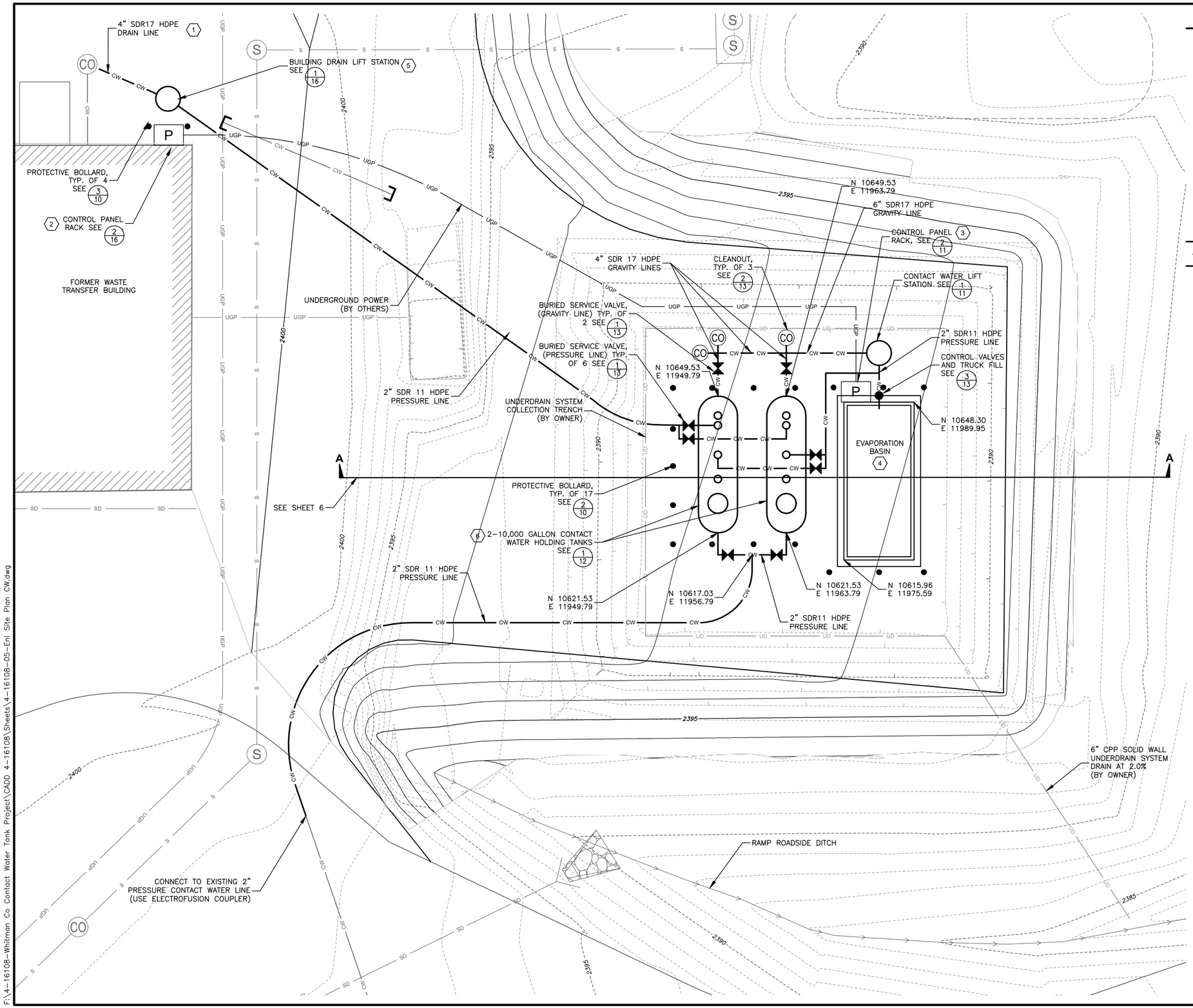

SHEET NOTES

1. SEE SHEET 2 FOR GENERAL PROJECT NOTES.
2. SEE SHEET 9 FOR FINISH GRADES.

KEYED NOTES

1. EXPOSE EXISTING CLEAN OUT AND INSTALL 4" LINE TO DRAIN TO NEW LIFT STATION. COORDINATE WITH ENGINEER.
2. MOUNT PUMP AND I & C CONTROL PANELS ON BUILDING NEXT TO ELECTRIC L CONTROLS. COORDINATE WITH OWNERS ELECTRICIAN FOR POWER AND MOUNTING OF ASSOCIATED ELECTRICAL PANELS.
3. MOUNT CONTROLS ON ELECTRICAL RACK AS SUPPLIED BY OWNERS ELECTRICIAN.
4. SEE STRUCTURAL PLAN SHEETS FOR EVAPORATION BASIN DETAILS.
5. SET NEW LIFT STATION AS CLOSE TO BUILDING AS PRACTICALLY POSSIBLE AS TO NOT DAMAGE THE BUILDING OR UNDERMINE THE FOUNDATION.
6. COORDINATE TANK PIPE AND VENT CONNECTIONS WITH TANK SUPPLIER AND ADJUST PIPE ALIGNMENTS ACCORDINGLY.

NO.	REVISION DESCRIPTION	BY	DATE

PROJECT: 4-16108
DESIGNED: ML / TAP
DRAWN: ML / BAA
CHECKED: REC
APPROVED: TAP
DATE: MARCH 2017

GreatWest engineering®
3363 N. LAKEHARBOR LANE
BOISE, ID 83703
(208)576-6046

CAROTHERS ROAD SOLID WASTE FACILITY
CONTACT WATER AND FIRE SUPPRESSION WATER HOLDING TANKS PROJECT
CONTACT WATER TANKS AND EVAPORATION BASIN ENLARGED SITE PLAN

SHEET NO.
5
OF 18

F:\4-16108-Whitman Co Contact Water Tank Project\CADD 4-16108\Sheets\4-16108-05-Enl Site Plan CW.dwg

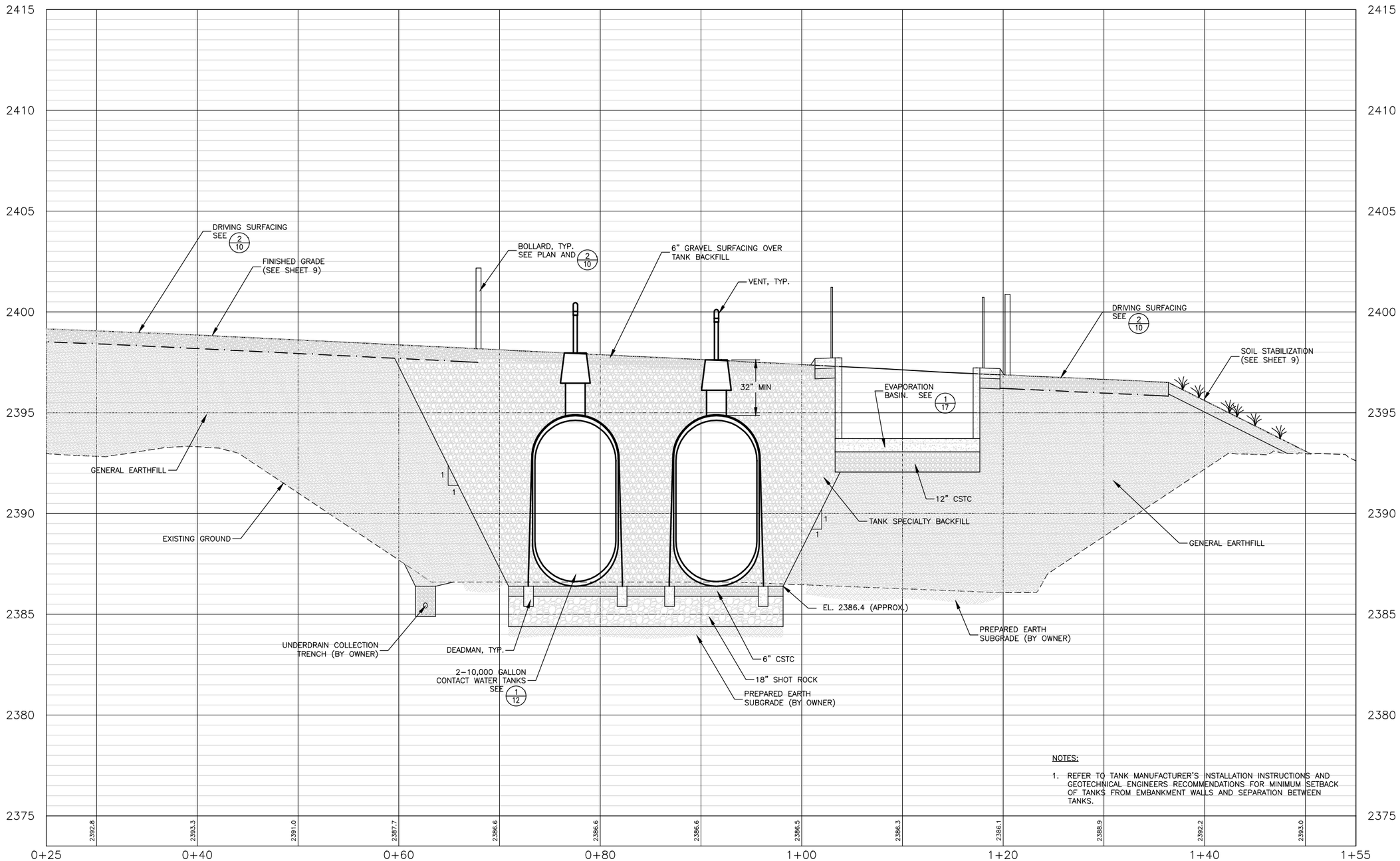

NOTES:

1. REFER TO TANK MANUFACTURER'S INSTALLATION INSTRUCTIONS AND GEOTECHNICAL ENGINEERS RECOMMENDATIONS FOR MINIMUM SETBACK OF TANKS FROM EMBANKMENT WALLS AND SEPARATION BETWEEN TANKS.

CONTACT WATER TANKS AND EVAPORATION BASIN SECTION A-A

HORIZONTAL SCALE: 1" = 10'
VERTICAL SCALE: 1" = 5'

NO.	REVISION DESCRIPTION	BY	DATE

PROJECT: 4-16108
DESIGNED: ML / TAP
DRAWN: ML / BAA
CHECKED: REC
APPROVED: TAP
DATE: MARCH 2017

TRAVIS A. PYLE
STATE OF WASHINGTON
24717
REGISTERED PROFESSIONAL ENGINEER

GreatWest engineering®
3363 N. LAKEHARBOR LANE
BOISE, ID 83703
(208)576-6046

CAROTHERS ROAD SOLID WASTE FACILITY
CONTACT WATER AND FIRE SUPPRESSION WATER HOLDING TANKS PROJECT
CONTACT WATER TANKS AND EVAPORATION BASIN SECTION

SHEET NO.
6
OF 18

F:\4-16108-Whitman Co Contact Water Tank Project\CADD 4-16108\Sheets\4-16108-06-Section.dwg

EXISTING TEE (1)

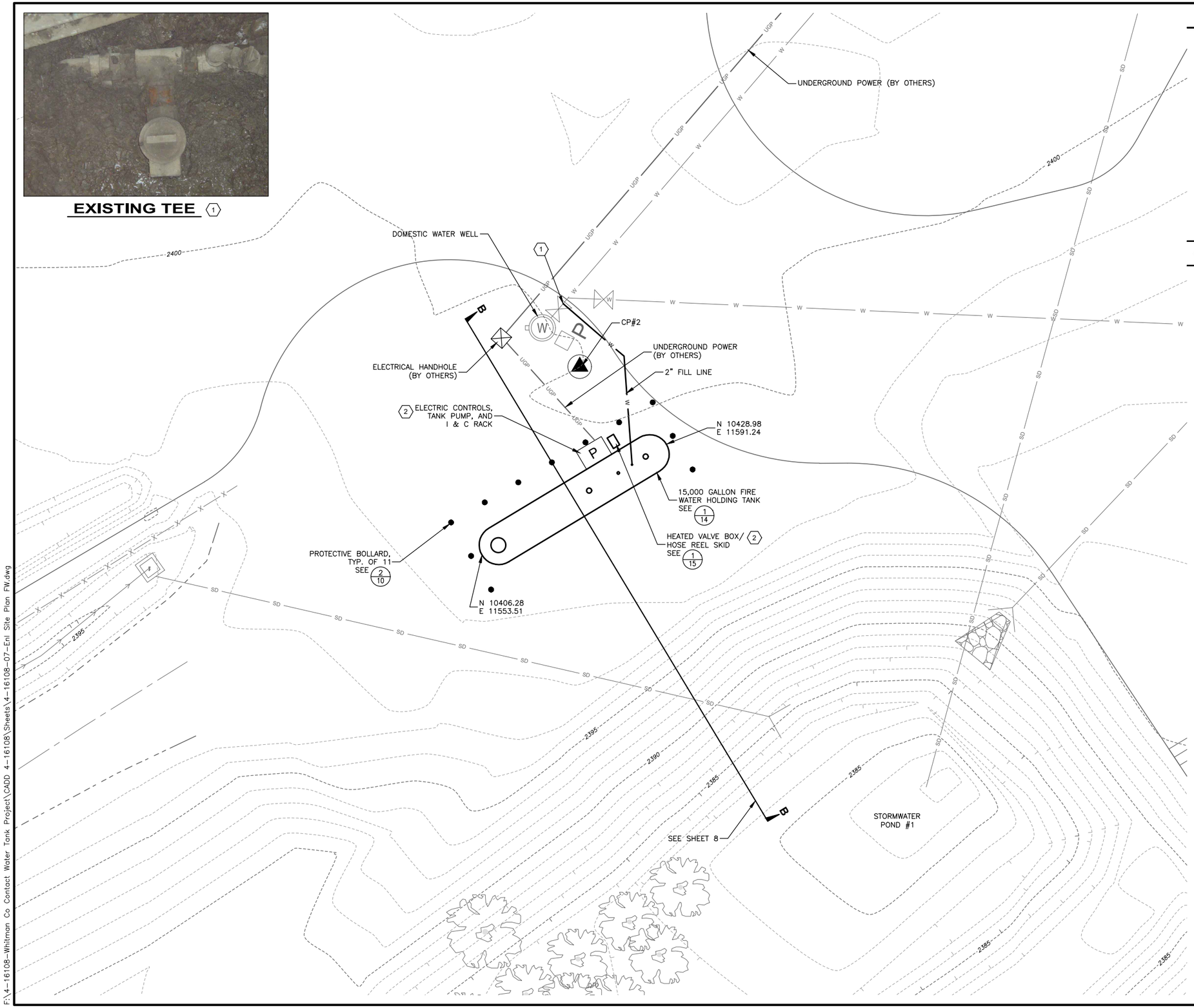

SHEET NOTES

1. SEE SHEET 2 FOR GENERAL PROJECT NOTES.
2. FOR FINISH GRADE, BLEND IN CRUSHED SURFACING AGGREGATE TO SURROUNDING GRADE. FINISH TO BE SMOOTH AND PROVIDE POSITIVE DRAINAGE TOWARD STORMWATER POND #1.

KEYED NOTES

1. CONNECT TO EXISTING TEE AND VALVE.
2. PLACE HEATED VALVE BOX/HOSE REEL SKID NEXT TO ELECTRICAL RACK (PAD AND RACK BY OWNERS' ELECTRICIAN). SECURE SKID SYSTEM TO CONCRETE PAD USING EPOXY CONCRETE ANCHOR BOLTS. COORDINATE WITH OWNER'S ELECTRICIAN.
3. COORDINATE TANK PIPE CONNECTIONS AND VENT WITH TANK SUPPLIER AND ADJUST PIPE ALIGNMENTS ACCORDINGLY.

NO.	REVISION DESCRIPTION	BY	DATE

PROJECT: 4-16108
DESIGNED: ML / TAP
DRAWN: ML / BAA
CHECKED: REC
APPROVED: TAP
DATE: MARCH 2017

GreatWest engineering®
3363 N. LAKEHARBOR LANE
BOISE, ID 83703
(208)576-6046

CAROTHERS ROAD SOLID WASTE FACILITY
CONTACT WATER AND FIRE SUPPRESSION WATER HOLDING TANKS PROJECT

FIRE SUPRESSION WATER HOLDING TANK ENLARGED SITE PLAN

SHEET NO.
7
OF 18

F:\4-16108-Whitman Co Contact Water Tank Project\CADD 4-16108\Sheets\4-16108-07-Enl Site Plan FW.dwg

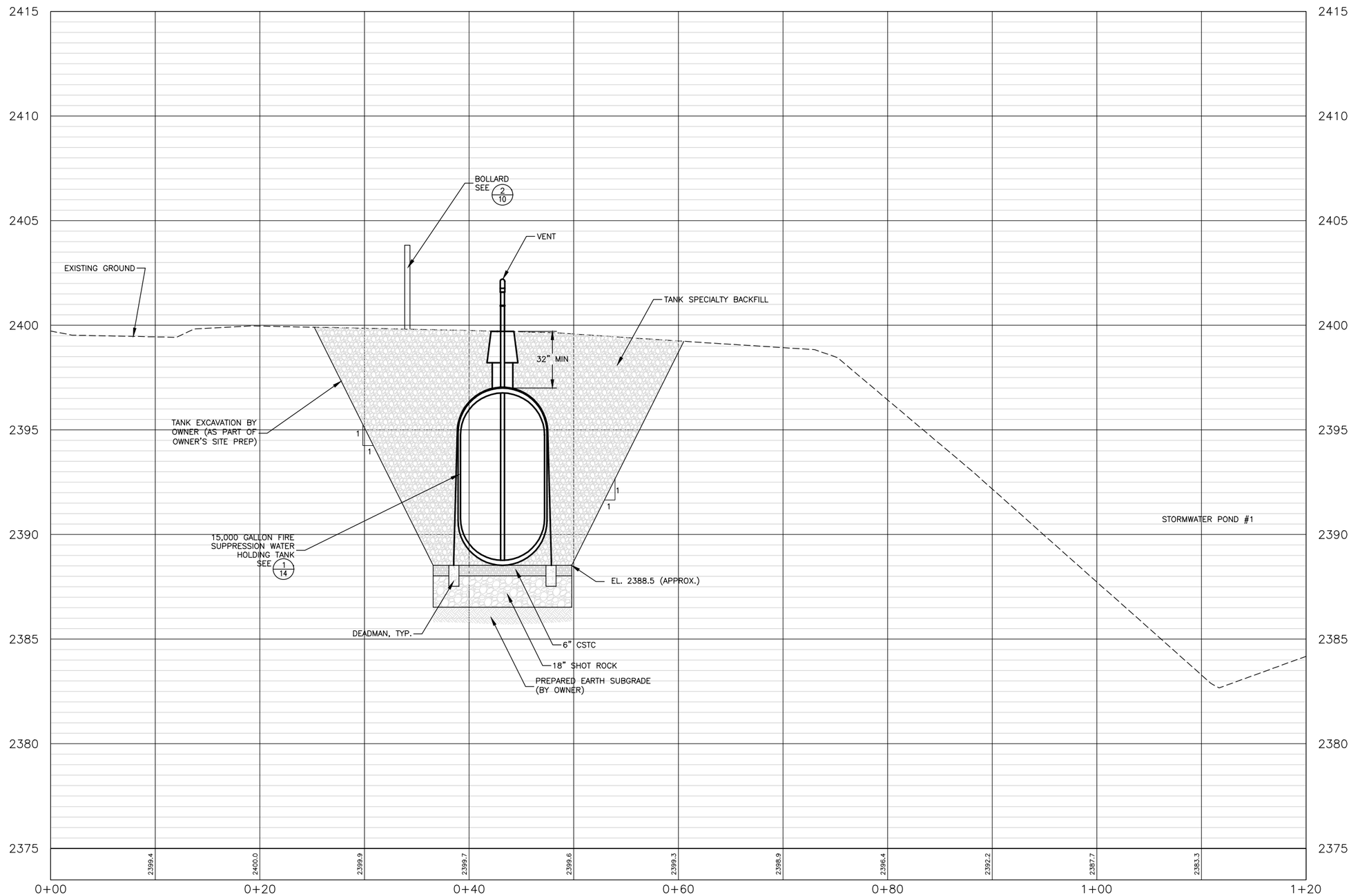

FIRE WATER TANK SECTION B-B

HORIZONTAL SCALE: 1" = 10'
VERTICAL SCALE: 1" = 5'

NO.	REVISION DESCRIPTION	BY	DATE
△			
△			
△			
△			
△			

PROJECT: 4-16108
DESIGNED: ML / TAP
DRAWN: ML / BAA
CHECKED: REC
APPROVED: TAP
DATE: MARCH 2017

GreatWest engineering®
3363 N. LAKEHARBOR LANE
BOISE, ID 83703
(208)576-6646

CAROTHERS ROAD SOLID WASTE FACILITY
CONTACT WATER AND FIRE SUPPRESSION WATER HOLDING TANKS PROJECT

FIRE SUPRESSION WATER HOLDING TANK SECTION

SHEET NO.
8
OF 18

F:\4-16108-Whitman Co Contact Water Tank Project\CADD 4-16108\Sheets\4-16108-08-Section.dwg

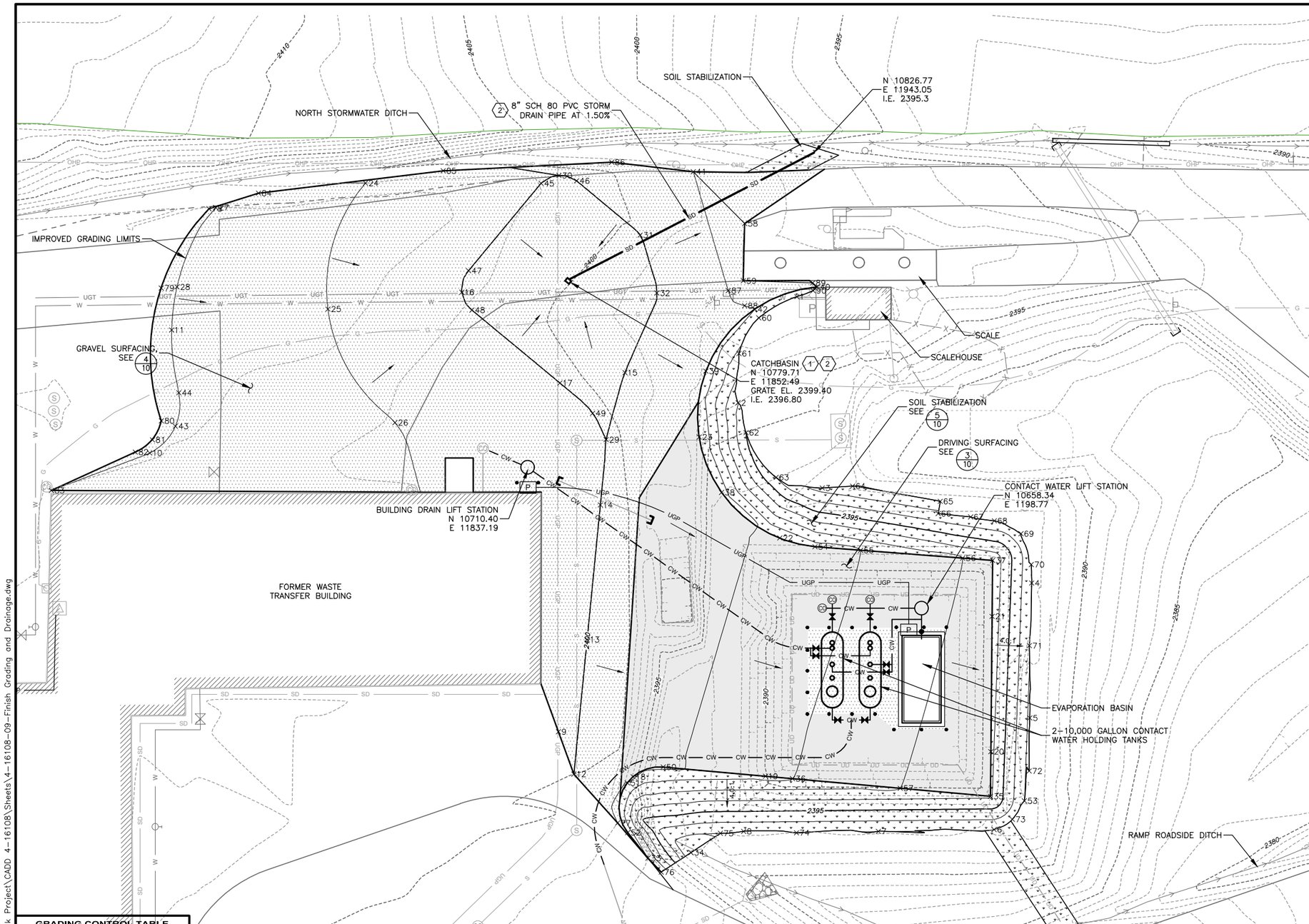

GENERAL PROJECT NOTES

1. SEE SHEET 2 FOR GENERAL PROJECT NOTES.
2. ELEVATIONS GIVEN ARE SHOWN TO FINISH GRADE.
3. SLOPE UNIFORMLY BETWEEN CONTOURS AS SHOWN ON PLAN AND ACCORDING TO SPOT ELEVATIONS GIVEN IN GRADING CONTROL TABLE.

KEYED NOTES

1. TYPE 1 CATCHBASIN AS MANUFACTURED BY WILBERT PRECAST, OR EQUIVALENT.
2. ADJUST PLACEMENT OF CATCHBASIN AND STORM DRAIN PIPE AS REQUIRED TO AVOID EXISTING UTILITIES WHILE MAINTAINING DRAINAGE TO AND FROM CATCHBASIN.

LEGEND

- SOIL STABILIZATION
- GRAVEL SURFACING
- DRIVING SURFACING

NO.	REVISION DESCRIPTION	BY	DATE

PROJECT: 4-16108
DESIGNED: ML / TAP
DRAWN: ML / BAA
CHECKED: REC
APPROVED: TAP
DATE: MARCH 2017

TRENT A. PYLE
STATE OF WASHINGTON
23171
REGISTERED PROFESSIONAL ENGINEER
STATE OF IDAHO
10986
REGISTERED PROFESSIONAL ENGINEER

GreatWest engineering®
3363 N. LAKEHARBOR LANE
BOISE, ID 83703
(208)576-6046

CAROTHERS ROAD SOLID WASTE FACILITY
CONTACT WATER AND FIRE SUPPRESSION WATER HOLDING TANKS PROJECT
FINISH GRADING AND DRAINAGE PLAN

SHEET NO.
9
OF 18

GRADING CONTROL TABLE

Point #	Elevation	Northing	Easting	Point #	Elevation	Northing	Easting	Point #	Elevation	Northing	Easting	Point #	Elevation	Northing	Easting
1	2398.093	10773.5249	11936.7071	11	2402.000	10761.1737	11705.6302	21	2396.632	10655.3096	12008.8539	31	2400.000	10796.2652	11878.7744
2	2396.046	10734.3031	11914.9468	12	2400.000	10597.0015	11854.2591	22	2398.759	10684.3023	11930.3888	32	2399.996	10774.8394	11884.9426
3	2392.616	10702.7630	11946.1013	13	2400.000	10646.7370	11859.1741	23	2399.818	10721.6239	11900.6125	33	2398.000	10565.9312	11881.6300
4	2393.094	10667.6375	12023.4722	14	2400.000	10696.4976	11864.0618	24	2401.000	10815.4807	11777.2506	34	2392.000	10567.9902	11897.5540
5	2392.801	10617.7481	12022.7742	15	2399.999	10745.4284	11873.1522	25	2401.000	10768.9322	11763.3831	35	2396.164	10588.7779	12008.2322
6	2393.073	10576.5074	12009.5807	16	2400.000	10775.1570	11812.8688	26	2401.000	10726.9418	11788.1387	36	2398.000	10595.3316	11935.0725
7	2393.021	10575.8409	11966.8185	17	2400.000	10741.5823	11849.1193	27	2402.000	10806.5013	11721.8892	37	2396.776	10675.9929	12009.0472
8	2393.148	10575.8308	11917.0365	18	2399.052	10596.0266	11876.1594	28	2402.000	10777.1054	11707.6036	38	2399.452	10701.1349	11908.8698
9	2400.193	10612.6650	11848.5684	19	2398.250	10596.2225	11925.1274	29	2400.000	10720.6387	11866.1961	39	2399.456	10745.9774	11903.0550
10	2401.999	10715.7146	11697.5238	20	2396.280	10605.3131	12008.3867	30	2400.000	10818.3230	11848.7728	40	2398.389	10777.0814	11944.1341

Point #	Elevation	Northing	Easting	Point #	Elevation	Northing	Easting	Point #	Elevation	Northing	Easting	Point #	Elevation	Northing	Easting
41	2399.000	10819.6830	11898.4117	51	2398.985	10593.7589	11874.0116	61	2397.825	10752.4823	11915.2949	71	2393.092	10644.5010	12022.6117
42	2399.000	10768.8369	11921.0388	52	2398.682	10575.3767	11874.1738	62	2395.000	10723.2586	11917.9292	72	2392.674	10598.1595	12022.5454
43	2401.998	10725.6004	11706.9802	53	2393.000	10587.1170	12020.7704	63	2394.000	10706.7066	11929.0125	73	2393.227	10580.2877	12016.3024
44	2402.000	10737.9644	11708.2525	54	2398.422	10681.0531	11943.3950	64	2392.000	10703.4582	11957.2837	74	2392.962	10575.2939	11936.5442
45	2400.000	10815.3782	11842.1573	55	2398.000	10679.7544	11960.2448	65	2392.124	10697.8337	11989.6982	75	2392.992	10575.1240	11908.4469
46	2400.000	10816.3293	11855.2805	56	2397.000	10676.8487	11997.9442	66	2393.279	10693.2948	11988.9061	76	2397.597	10560.7857	11886.5532
47	2400.000	10783.1167	11815.3514	57	2397.000	10591.7627	11974.9130	67	2393.113	10692.0681	12000.9195	77	2399.000	10578.9127	11870.4443
48	2400.000	10768.5637	11816.5688	58	2398.830	10800.5566	11917.3988	68	2393.124	10690.6401	12009.6974	78	2402.020	10806.0304	11719.4363
49	2399.999	10730.3900	11861.2133	59	2398.929	10779.3803	11916.8888	69	2393.179	10685.8608	12019.5284	79	2402.146	10776.6915	11701.7547
50	2399.199	10599.6125	11887.2846	60	2398.351	10765.6810	11922.6017	70	2393.192	10674.4663	12023.3360	80	2402.329	10727.6193	11701.8020

Point #	Elevation	Northing	Easting	Point #	Elevation	Northing	Easting
81	2402.213	10720.5808	11698.5089	91	2398.277	10778.5916	11942.5134
82	2402.192	10716.0483	11692.1969	92	2398.147	10775.7489	11942.7088
83	2402.000	10701.8552	11661.1780				
84	2401.414	10811.7730	11737.7167				
85	2400.517	10820.0491	11805.9867				
86	2399.198	10823.2188	11868.2689				
87	2399.001	10775.7644	11911.3453				
88	2399.002	10770.1428	11917.4112				
89	2398.277	10778.5916	11942.5134				
90	2398.147	10775.7489	11942.7088				

F:\4-16108-Whitman Co Contact Water Tank Project\CADD 4-16108\Sheets\4-16108-09-Finish Grading and Drainage.dwg

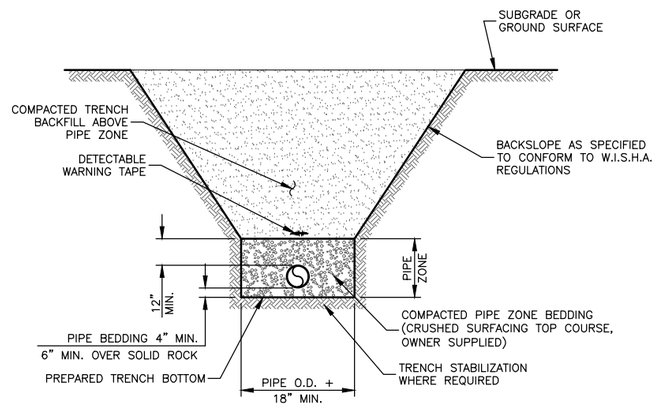

1/10 PIPE TRENCH

NOT TO SCALE

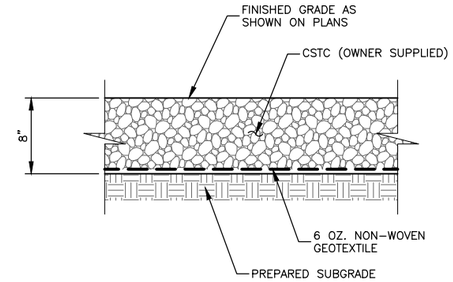

3/10 DRIVING SURFACING DETAIL

NOT TO SCALE

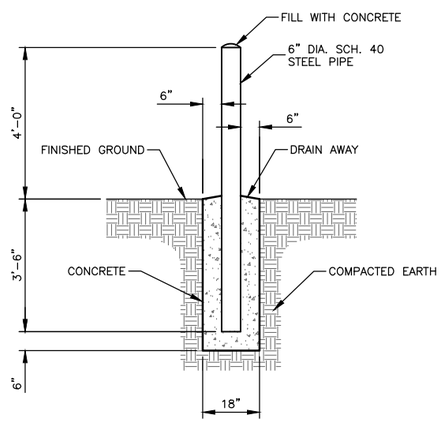

NOTES:
1. PAINT ALL EXPOSED STEEL WITH 2 COATS OF TRAFFIC YELLOW.

2/10 BOLLARD DETAIL

NOT TO SCALE

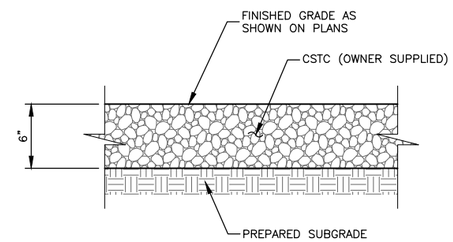

NOTES:
1. IN AREAS PREVIOUSLY ROCK SURFACED, PROVIDE A MINIMUM OF 6" CSTC.

4/10 GRAVEL SURFACING DETAIL

NOT TO SCALE

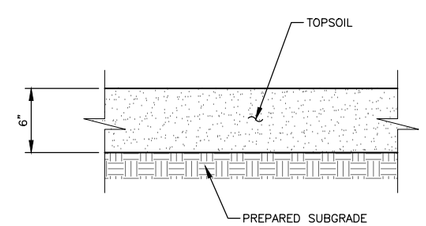

NOTES:
1. PLACE TOPSOIL WITH LOW COMPACTION TECHNIQUES. TRACK WALK SLOPES (PERPENDICULAR TO SLOPES) BEFORE SEEDING.

5/10 SOIL STABILIZATION DETAIL

NOT TO SCALE

NO.	REVISION DESCRIPTION	BY	DATE

PROJECT: 4-16108
DESIGNED: ML / TAP
DRAWN: ML / BAA
CHECKED: REC
APPROVED: TAP
DATE: MARCH 2017

GreatWest engineering®
3363 N. LAKEHARBOR LANE
BOISE, ID 83703
(208)576-6046

CAROTHERS ROAD SOLID WASTE FACILITY
CONTACT WATER AND FIRE SUPPRESSION WATER HOLDING TANKS PROJECT

GENERAL DETAILS

SHEET NO.
10
OF 18

F:\4-16108-Whitman Co Contact Water Tank Project\CADD 4-16108\Sheets\4-16108-10-Details.dwg

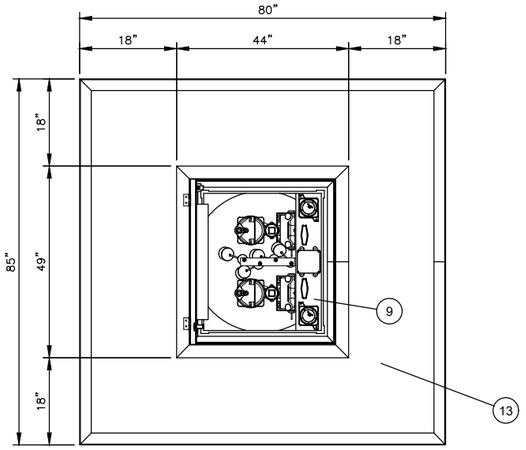

PLAN

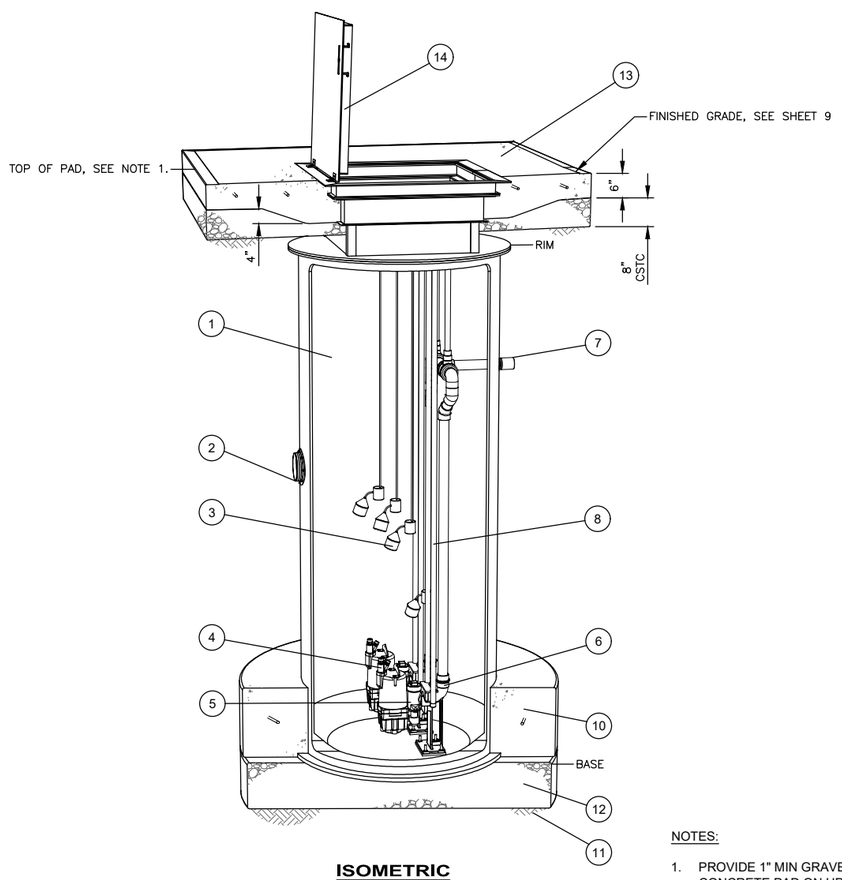

ISOMETRIC

NOTES:

1. PROVIDE 1" MIN GRAVEL LIP AROUND PERIMETER OF CONCRETE PAD ON UPHILL SIDE. SPREAD AND GRADE TO MATCH FINISH GRADE.

1/11 CONTACT WATER LIFT STATION

NOT TO SCALE

NO.	ELEV.	DESCRIPTION
1		48 IN X 174 IN FRP WET WELL
	2396.33	RIM-SEE DRAWING, ADJUST FOR HATCH AND CONC. SLAB
	2381.87	BASE
2	2385.50	IE - INLET HUB FOR 6 IN SDR17 HDPE PIPE (9:00 POSITION)
3		LEVEL SWITCHES-LEVLES SET BY PUMP STATION MANUFACTURER AND APPROVED BY ENGINEER.
4		MYERS SX200H PUMP, 2 HP, 200V/3 (x2) EXPLOSION-PROOF, 30 GPM @ 30 FT TDH (EACH)
5		2 IN BALL CHECK VALVE - REMOVABLE WITH PUMP
6		2 IN DISCHARGE ELBOW ASSEMBLY
7		2 IN SCHEDULE 80 PVC DISCHARGE (6:00 POSITION)
8		STAINLESS STEEL SLIDE RAILS
9		OPERATION DECK - JUNCTION BOXES - VALVE OPERATORS
10		REINFORCED CONCRETE ANTI-FLOTATION RING (24 IN WIDE X 12 IN DEEP)
11		PREPARED SUBGRADE
12		12 IN COMPACTED STRUCTURAL BASE (CSTC-OWNER SUPPLIED)
13		CONCRETE SLAB REINFORCED WITH #4 BAR, 12 IN O.C.E.W
14		TRAFFIC RATED ALUMINUM HATCH WITH SKIRT (HALLIDAY H1R)
15		DUPLEX ALTERNATING CONTROL PANEL
16		PANEL RACK AND CONDUITS
17		SUPPLY POWER CONDUIT
18		PUMP CONDUIT (X2)
19		LEVEL SWITCH CONDUIT

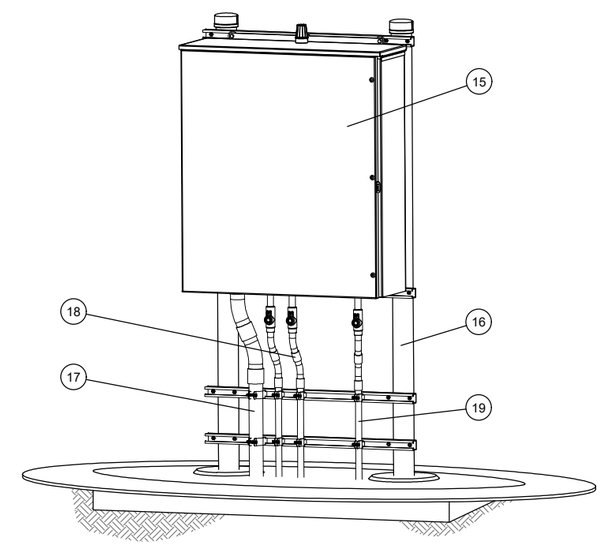

NOTES:

1. COORDINATE PANEL MOUNTING WITH OWNER'S ELECTRICIAN, WHO WILL PROVIDE PAD AND ELECTRICAL RACK ASSEMBLY.
2. OWNER'S ELECTRICIAN TO PROVIDE ALL ELECTRICAL AND MONITORING CONTROL CONDUITS AND WIRE.

2/11 CONTROL PANEL RACK

NOT TO SCALE

NO.	REVISION DESCRIPTION	BY	DATE

PROJECT: 4-16108
DESIGNED: ML / TAP
DRAWN: ML / BAA
CHECKED: REC
APPROVED: TAP
DATE: MARCH 2017

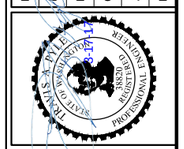

GreatWest engineering®
3363 N. LAKEHARBOR LANE
BOISE, ID 83703
(208)576-6046

CAROTHERS ROAD SOLID WASTE FACILITY
CONTACT WATER AND FIRE SUPPRESSION WATER HOLDING TANKS PROJECT

CONTACT WATER LIFT STATION DETAILS

SHEET NO.
11
OF 18

F:\4-16108-Whitman Co Contact Water Tank Project\CADD 4-16108\Sheets\4-16108-11-Details.dwg

ITEM	DESCRIPTION
1	XERXES 10,000 GALLON TANK, 8 FT DIAMETER, DOUBLE WALL (X2)
2	12 FOOT DEADMEN WITH TURNBUCKLES & STRAPS - TYP OF 2
3	16 FOOT DEADMEN WITH TURNBUCKLES & STRAPS - TYP OF 2
4	4 INCH NPT MONITORING FITTING
5	4 INCH RISER CONDUIT WITH JUNCTION BOX
6	ELECTRICAL HAND HOLE (PRECAST CONCRETE)
7	CONDUIT TO ALARM PANEL (SEE NOTES)
8	4 INCH HALF COUPLING - VENT
9	4 INCH SCREENED VENT (STAINLESS STEEL)
10	2 INCH FLANGED NOZZLE - LIFT STATION DISCHARGE
11	2 INCH FLANGED NOZZLE - WTB CONTACT WATER PRESSURE PIPE INLET
12	2 INCH FLANGED NOZZLE - BUILDING DRAIN LIFT STATION INLET
13	4 INCH FLANGED NOZZLE - OUTLET
14	24 INCH ACCESS RISER AND COVER

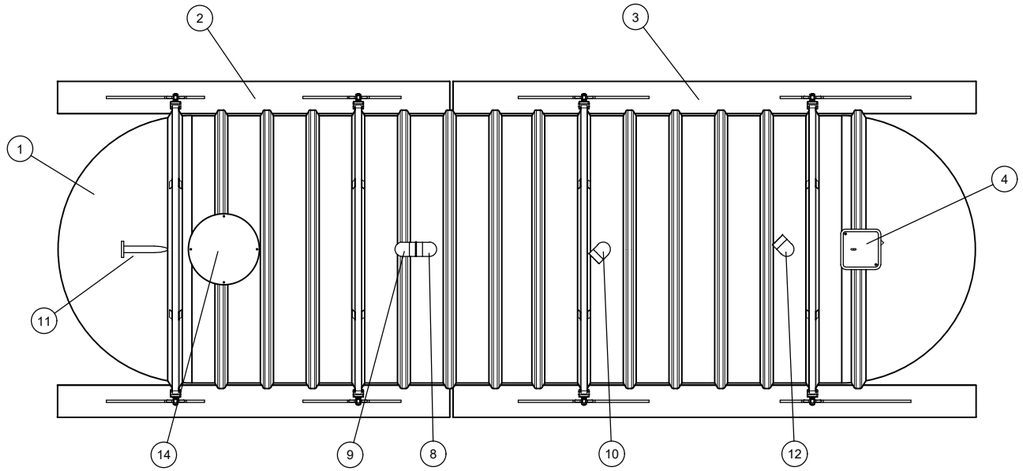

PLAN

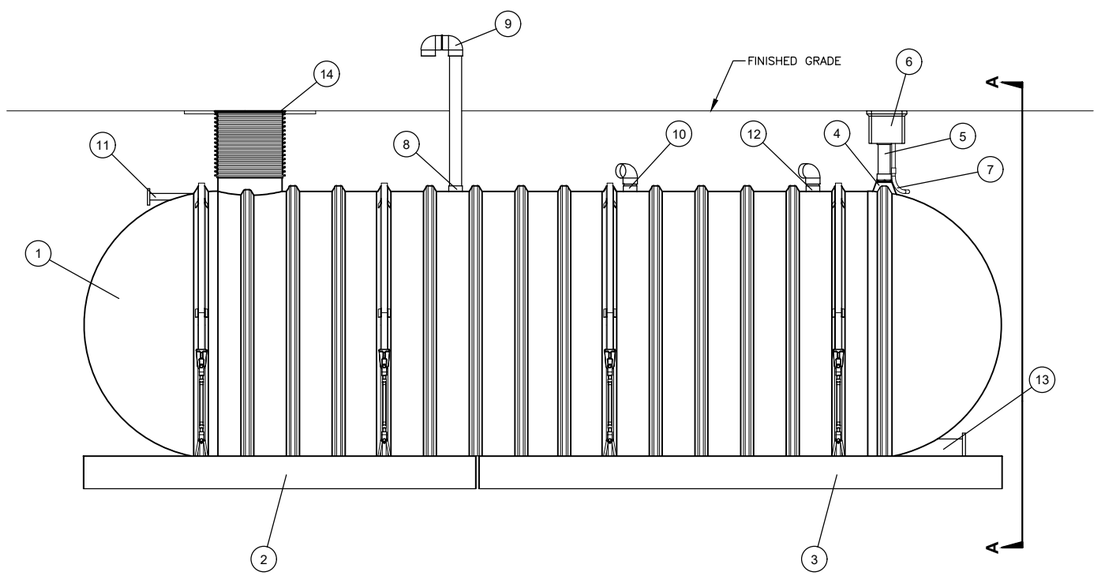

ELEVATION

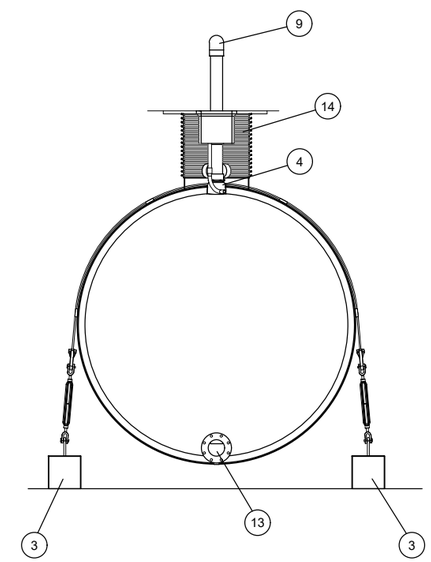

SECTION A-A

NOTES:

1. COORDINATE ARRANGEMENT OF FITTINGS AND ATTACHMENTS WITH SHEET 5.
2. PROVIDE 4" SCHEDULE 40 PVC VENT PIPING (BURIED) AND TRANSITION TO 4" SST AT VERTICAL ELBOW TO SURFACE. PROVIDE GOOSE-NECK ELBOW 30" ABOVE GROUND WITH SCREENED OPENING.
3. COORDINATE PANEL MOUNTING WITH OWNER'S ELECTRICIAN, WHO WILL PROVIDE PAD AND ELECTRICAL RACK ASSEMBLY.
4. OWNER'S ELECTRICIAN TO PROVIDE ALL ELECTRICAL AND MONITORING CONTROL CONDUITS AND WIRE.

1/12 **CONTACT WATER HOLDING TANKS**
NOT TO SCALE

NO.	REVISION DESCRIPTION	BY	DATE

PROJECT: 4-16108
DESIGNED: ML / TAP
DRAWN: ML / BAA
CHECKED: REC
APPROVED: TAP
DATE: MARCH 2017

TRAVIS A. PYLE
STATE OF WASHINGTON
38826
REGISTERED PROFESSIONAL ENGINEER
3-17-17

GreatWest engineering®
3363 N. LAKEHARBOR LANE
BOISE, ID 83703
(208)576-6046

CAROTHERS ROAD SOLID WASTE FACILITY
CONTACT WATER AND FIRE SUPPRESSION WATER HOLDING TANKS PROJECT
CONTACT WATER TANK DETAILS

SHEET NO.
12
OF 18

F:\4-16108-Whitman Co Contact Water Tank Project\CADD 4-16108\Sheets\4-16108-12-Details.dwg

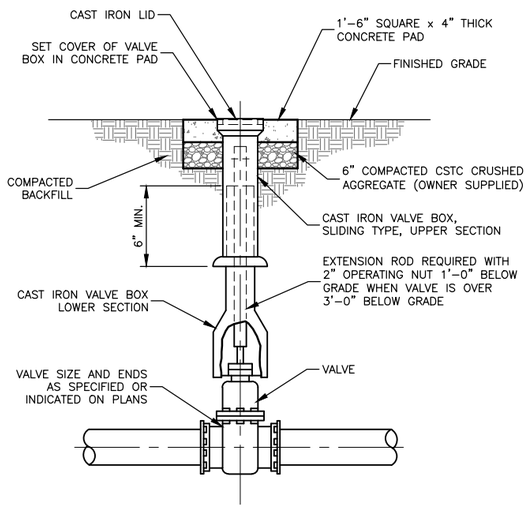

1/13 BURIED SERVICE VALVE

NOT TO SCALE

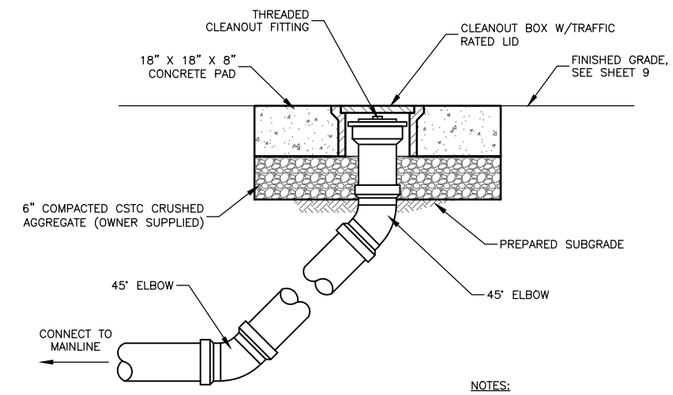

NOTES:

1. ALL CLEANOUT PIPE SHALL MATCH MAINLINE PIPE MATERIAL AND SDR.

2/13 CLEANOUT TO GRADE DETAIL

NOT TO SCALE

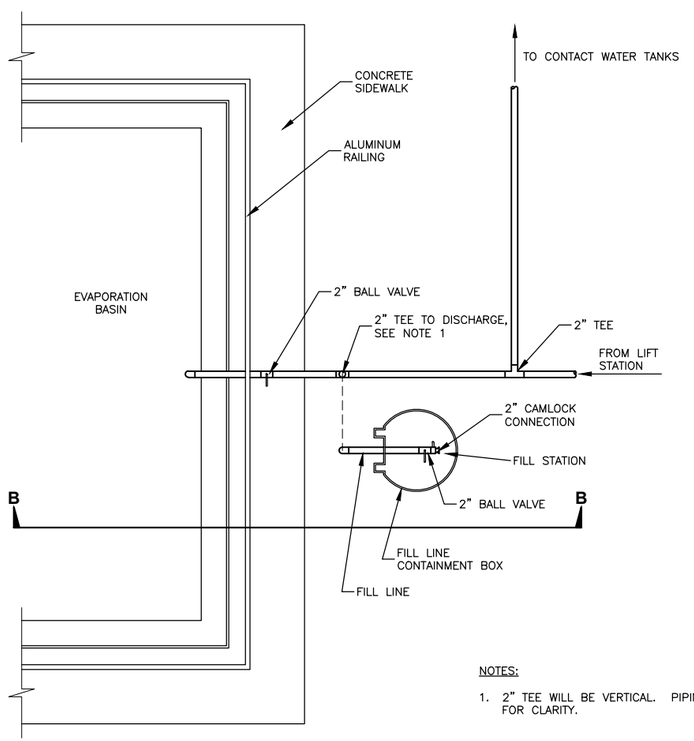

NOTES:

1. 2" TEE WILL BE VERTICAL. PIPING AND VALVES SHOWN OFFSET FOR CLARITY.

PLAN

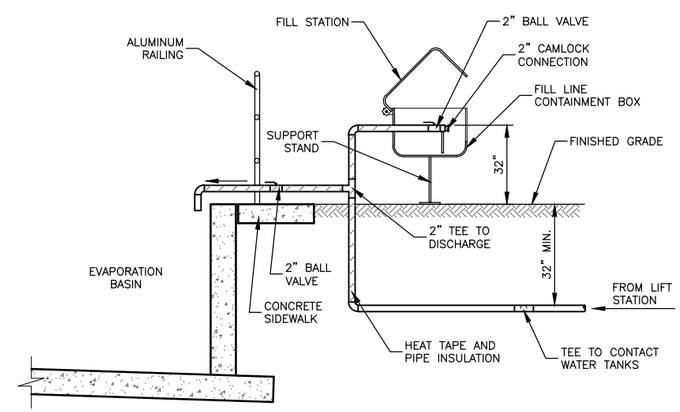

SECTION B-B

3/13 EVAPORATION BASIN PIPING DETAIL

NOT TO SCALE

NO.	REVISION DESCRIPTION	BY	DATE

PROJECT: 4-16108
DESIGNED: ML / TAP
DRAWN: ML / BAA
CHECKED: REC
APPROVED: TAP
DATE: MARCH 2017

GreatWest engineering®
3363 N. LAKEHARBOR LANE
BOISE, ID 83703
(208)576-6046

CAROTHERS ROAD SOLID WASTE FACILITY
CONTACT WATER AND FIRE SUPPRESSION WATER HOLDING TANKS PROJECT

CONTACT WATER TANK DETAILS

SHEET NO.
13
OF 18

F:\4-16108-Whitman Co Contact Water Tank Project\CADD 4-16108\Sheets\4-16108-13-Details.dwg

ITEM	DESCRIPTION
1	XERXES 15,000 GALLON RESERVIOR TANK, 8 FT DIAMETER
2	16 FOOT DEADMEN WITH TURNBUCKLES & STRAPS - TYP OF 4
3	12 FOOT DEADMEN WITH TURNBUCKLES & STRAPS - TYP OF 2
4	6 INCH BOOSTER PUMP WET WELL
5	2 INCH HALF COUPLING - FILL WATER
6	6 INCH HALF COUPLING
7	6 INCH SCREENED VENT (STAINLESS STEEL)
8	6 INCH COUPLING WITH SUCTION PIPE - DRAFT TUBE (SST)
9	24 X 24 OLDCASTLE/CARSON 24 SERIES VAULT
10	6 INCH CAP WITH 1 INCH CONDUIT CONECTION
11	24 INCH ACCESS RISER AND COVER
12	AY MCDONALD PUMP, 2 HP, 208V/3 (CONNECT TO HOSE REEL)
13	1.5 INCH PITTLESS ADAPTER WITH FIPT DISCHARGE
14	2 INCH HYDRANT ADAPTER WITH DUST CAP - VERIFY CONFIGURATION WITH OWNER

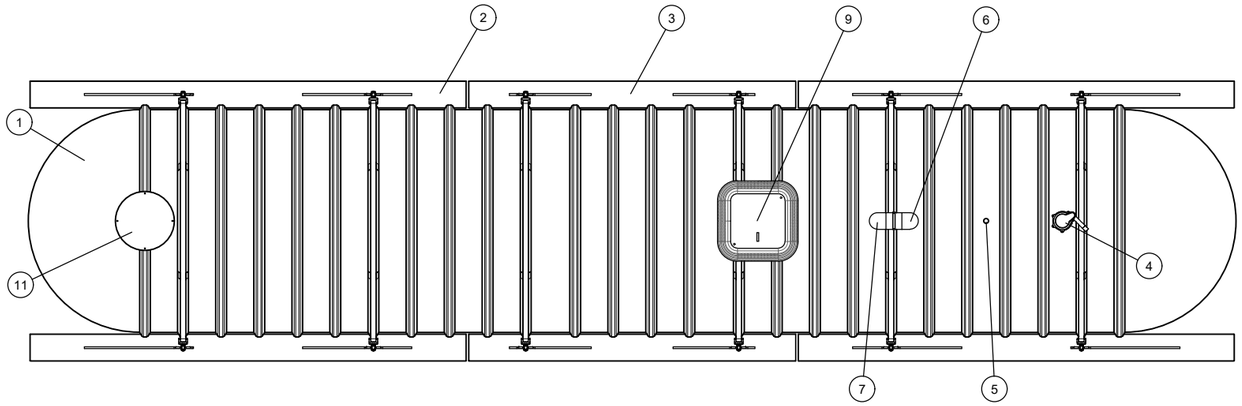

PLAN

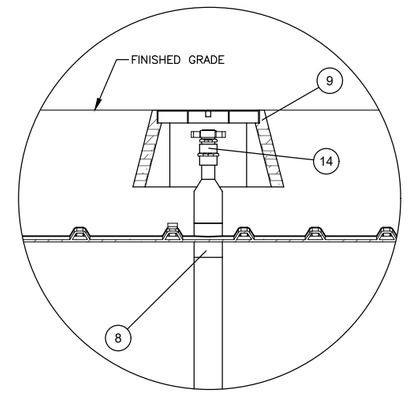

SUCTION/DRAW PIPE DETAIL

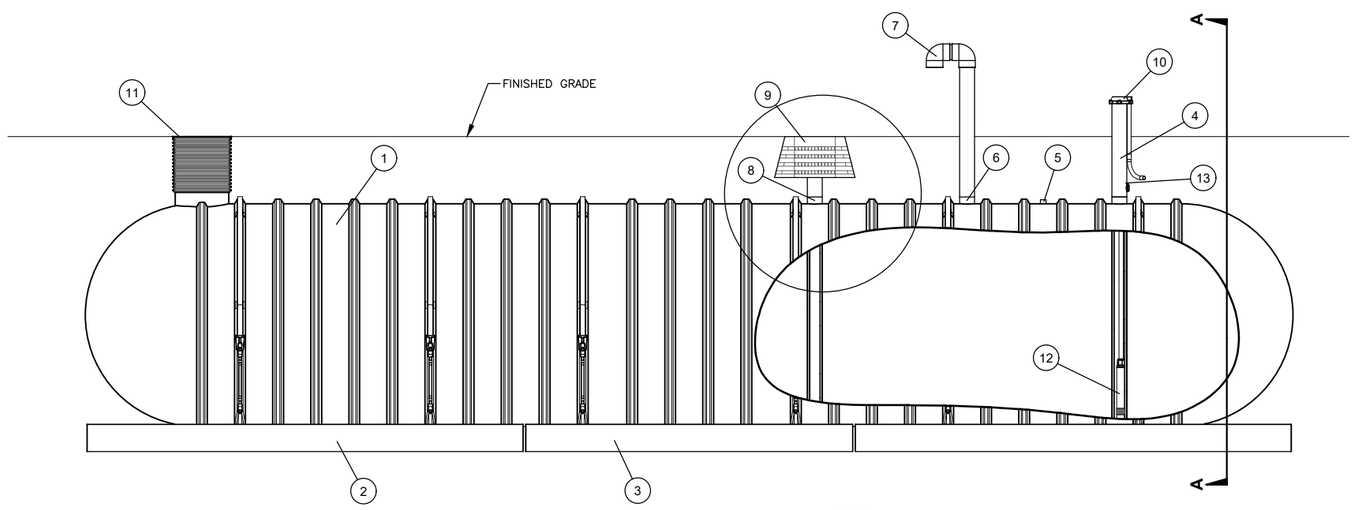

ELEVATION

NOTES:
1. COORDINATE ARRANGEMENT OF FITTINGS AND ATTACHMENTS WITH SHEET 7.
2. PROVIDE 4" SCHEDULE 40 PVC VENT PIPING (BURIED) AND TRANSITION TO 4" SST AT VERTICAL ELBOW TO SURFACE. PROVIDE GOOSE-NECK ELBOW 30" ABOVE GROUND WITH SCREENED OPENING.
3. COORDINATE PANEL MOUNTING WITH OWNER'S ELECTRICIAN, WHO WILL PROVIDE PAD AND ELECTRICAL RACK ASSEMBLY.
4. OWNER'S ELECTRICIAN TO PROVIDE ALL ELECTRICAL AND MONITORING CONTROL CONDUITS AND WIRE.

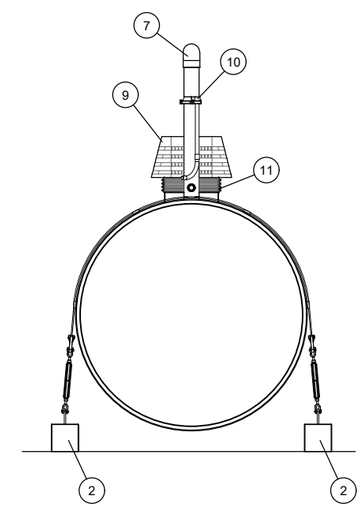

SECTION A-A

1/14 **FIRE SUPPRESSION WATER HOLDING TANK**
NOT TO SCALE

NO.	REVISION DESCRIPTION	BY	DATE

PROJECT: 4-16108
DESIGNED: ML / TAP
DRAWN: ML / BAA
CHECKED: REC
APPROVED: TAP
DATE: MARCH 2017

TRENTON A. PYLE
STATE OF WASHINGTON
23-17-1
LICENSED
PROFESSIONAL ENGINEER

GreatWest engineering®
3363 N. LAKEHARBOR LANE
BOISE, ID 83703
(208)576-6046

CAROTHERS ROAD SOLID WASTE FACILITY
CONTACT WATER AND FIRE SUPPRESSION WATER HOLDING TANKS PROJECT
FIRE SUPRESSION WATER HOLDING TANK DETAILS

SHEET NO.
14
OF 18

F:\4-16108-Whitman Co Contact Water Tank Project\CADD 4-16108\Sheets\4-16108-14-Details.dwg

ITEM	DESCRIPTION
1	FABRICATED STEEL SKID, EPOXY COATING
2	SAFETCOVER 100SNT-AL VALVE BOX, WITH 120V HEAT TRACE
3	CONTROL PANEL, 2 HP, 230V/3, 120V/1 CONTROL POWER, MANUAL WASHDOWN ON/OFF, AUTOMATIC TANK FILL
4	HOSE REEL, W/1.5 IN X 100 FT HOSE
5	1.5 IN CLAVAL SOLENOID FILL VALVE
6	1.5 IN BACKFLOW PREVENTER
7	1.5 IN SCH 40 STAINLESS STEEL MANIFOLD WITH ISOLATION BALL VALVE
8	1.5 IN SCH 40 STAINLESS STEEL DISCHARGE MANIFOLD, ISOLATION VALVE, CAMLOCK DISCONNECT FOR DRAINING AND WINTERIZATION

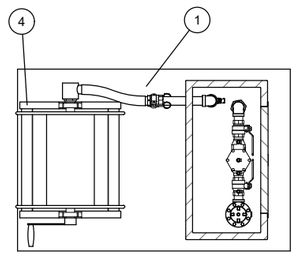

SECTION A-A

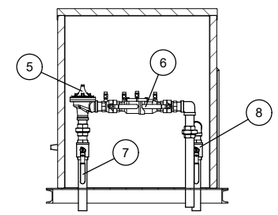

SECTION B-B

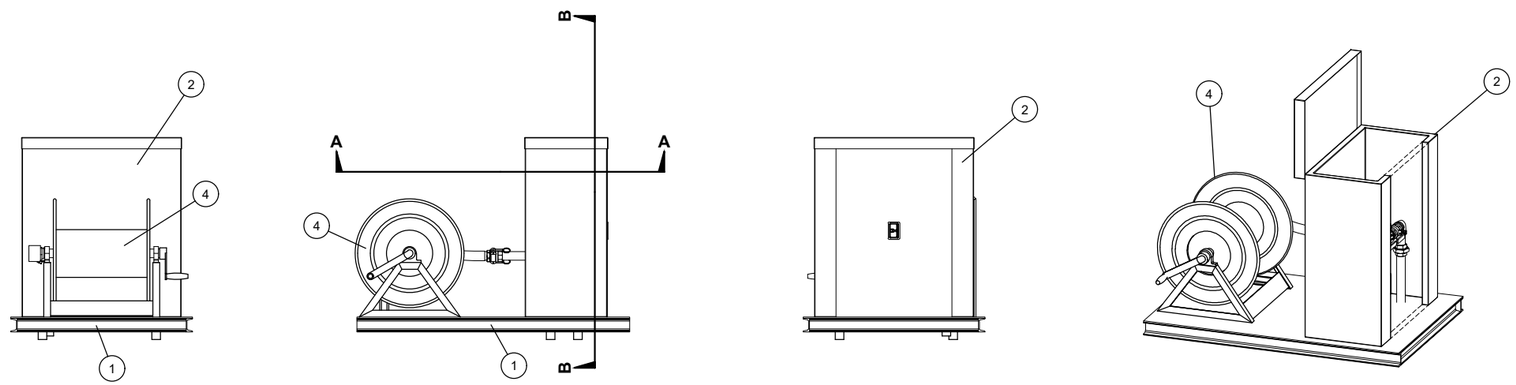

NOTES:

1. MOUNT ASSEMBLY ON ELECTRICIANS PAD. COORDINATE WITH ELECTRICIAN FOR ALL PLUMBING.
2. MOUNT PUMP CONTROL PANEL ON ELECTRICIANS PAD.
3. OWNER'S ELECTRICIAN TO PROVIDE ALL ELECTRICAL AND MONITORING CONTROL CONDUITS AND WIRE.

1/15 HEATED VALVE BOX/HOSE REEL SKID

NOT TO SCALE

NO.	REVISION DESCRIPTION	BY	DATE
1			
2			
3			
4			
5			

PROJECT: 4-16108
DESIGNED: ML / TAP
DRAWN: ML / BAA
CHECKED: REC
APPROVED: TAP
DATE: MARCH 2017

TRAVIS A. PYLE
STATE OF IDAHO
16-12-1
16868
PROFESSIONAL ENGINEER

GreatWest engineering®
3363 N. LAKEHARBOR LANE
BOISE, ID 83703
(208)576-6046

CAROTHERS ROAD SOLID WASTE FACILITY
CONTACT WATER AND FIRE SUPPRESSION WATER HOLDING TANKS PROJECT
FIRE SUPRESSION WATER HOLDING TANK DETAILS

SHEET NO.
15
OF 18

F:\4-16108-Whitman Co Contact Water Tank Project\CADD 4-16108\Sheets\4-16108-15-Details.dwg

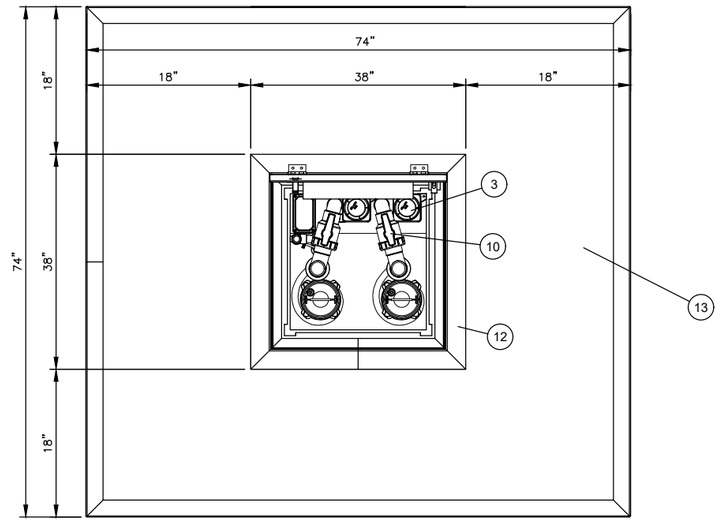

PLAN

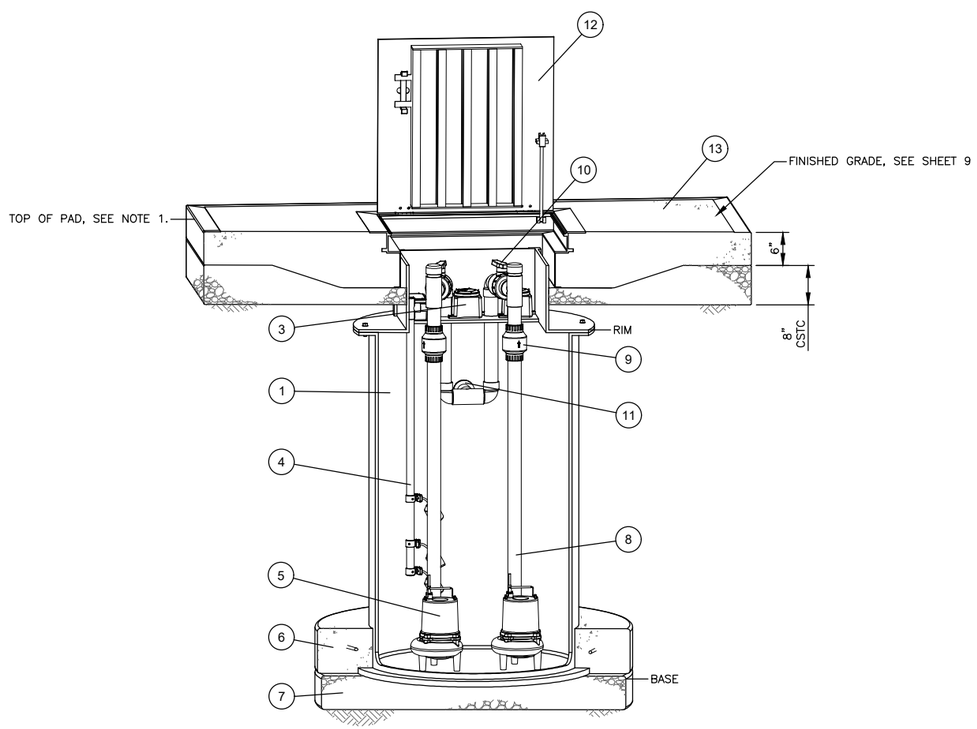

ISOMETRIC

NOTES:

1. PROVIDE 1" MIN GRAVEL LIP AROUND PERIMETER OF CONCRETE PAD ON UPHILL SIDE. SPREAD AND GRADE TO MATCH FINISH GRADE.

1/16 BUILDING DRAIN LIFT STATION

NOT TO SCALE

NO.	ELEV.	DESCRIPTION
1		36 IN X 132 IN FRP WET WELL
	2399.33	RIM
	2388.33	BASE
2	2392.00	IE - 4 IN SDR35 PVC INLET 9:00 POSITION (NOT SHOWN)
3		ELECTRICAL SPLICE BOX(ES)
4		LEVEL SWITCHES-LEVLES SET BY PUMP STATION MANUFACTURER AND APPROVED BY ENGINEER.
5		MYERS SX50 PUMP, 1/2 HP, 200V/3 (X2) EXPLOSION-PROOF, 20 GPM @ 20 FT TDH
6		REINFORCED CONCRETE ANTI-FLOTATION RING (24 IN WIDE X 12 IN DEEP)
7		12 IN COMPACTED STRUCTURAL BASE (CSTC-OWNER SUPPLIED)
8		2 IN SCH 40 PVC DISCHARGE ASSEMBLY
9		2 IN CHECK VALVE
10		2 IN BALL VALVE
11	2396.00	IE - 2 IN FIPT DISCHARGE 3:00 POSITION
12		TRAFFIC RATED ALUMINUM HATCH WITH SKIRT (HALLIDAY H1R)
13		REINFORCED CONCRETE SLAB
14		DUPLEX ALTERNATING CONTROL PANEL MOUNTED ON BUILDING
15		SUPPLY POWER CONDUIT
16		PUMP CONDUIT (X2)
17		LEVEL SWITCH CONDUIT

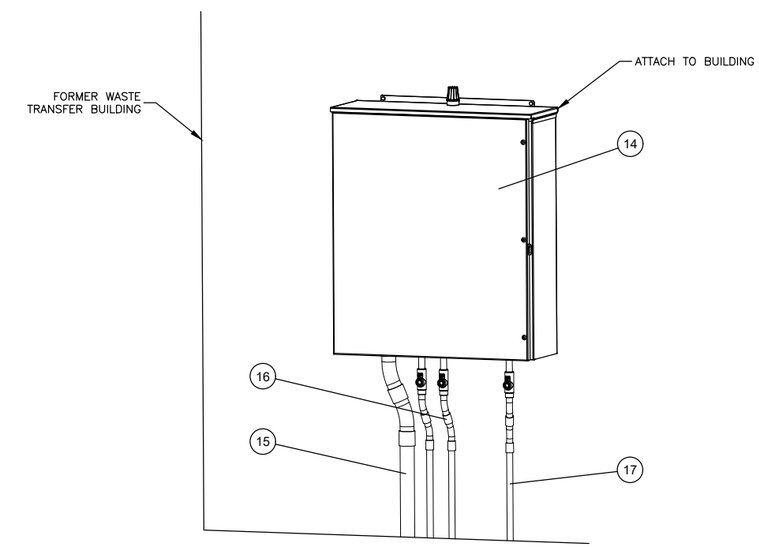

NOTES:

1. COORDINATE PANEL MOUNTING WITH OWNER'S ELECTRICIAN, WHO WILL PROVIDE PAD AND ELECTRICAL RACK ASSEMBLY.
2. OWNER'S ELECTRICIAN TO PROVIDE ALL ELECTRICAL AND MONITORING CONTROL CONDUITS AND WIRE.

2/16 CONTROL PANEL RACK

NOT TO SCALE

NO.	REVISION DESCRIPTION	BY	DATE

PROJECT: 4-16108
DESIGNED: ML / TAP
DRAWN: ML / BAA
CHECKED: REC
APPROVED: TAP
DATE: MARCH 2017

TRAVIS A. PYLE
STATE OF WASHINGTON
38820
REGISTERED PROFESSIONAL ENGINEER
3-17-17

GreatWest engineering®
3363 N. LAKEHARBOR LANE
BOISE, ID 83703
(208)576-6046

CAROTHERS ROAD SOLID WASTE FACILITY
CONTACT WATER AND FIRE SUPPRESSION WATER HOLDING TANKS PROJECT

BUILDING DRAIN LIFT STATION DETAILS

SHEET NO.
16
OF 18

F:\4-16108-Whitman Co Contact Water Tank Project\CADD 4-16108\Sheets\4-16108-16-Details.dwg

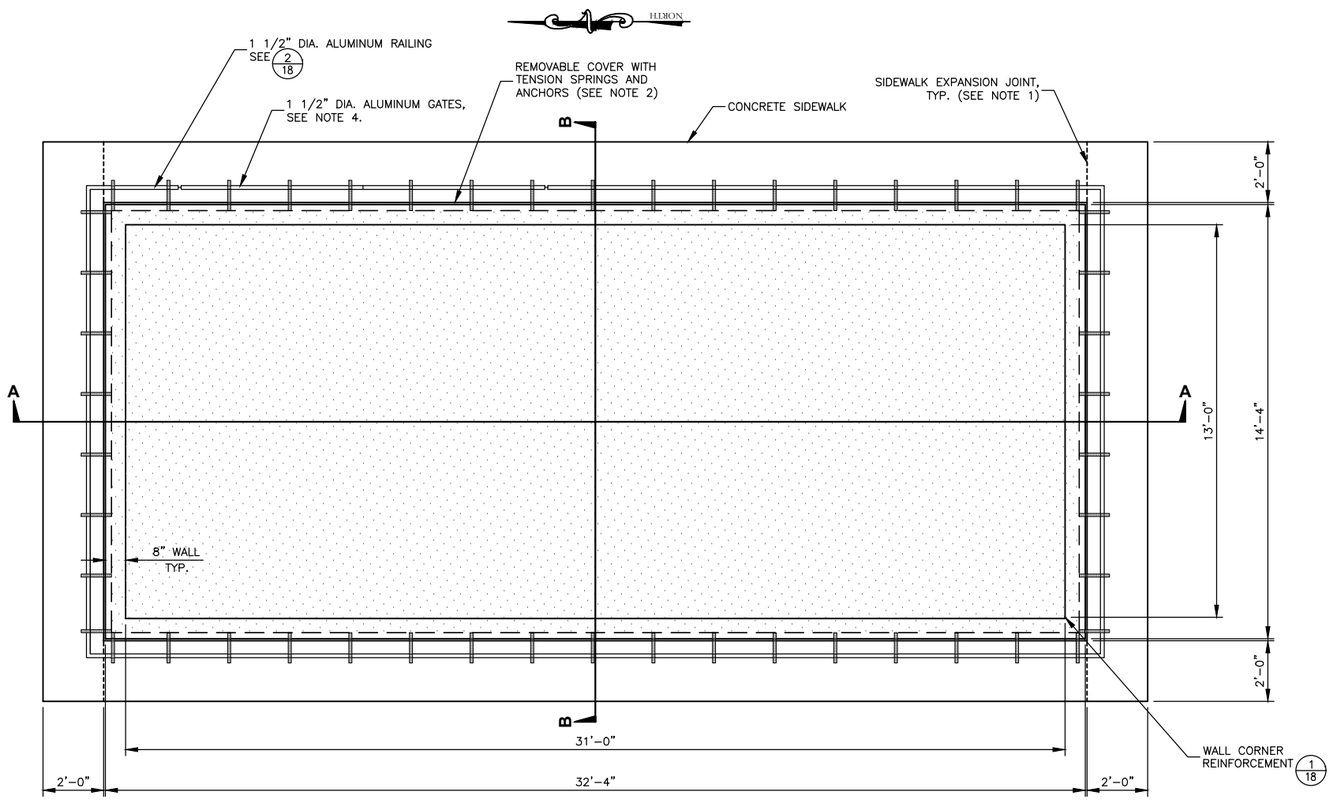

PLAN

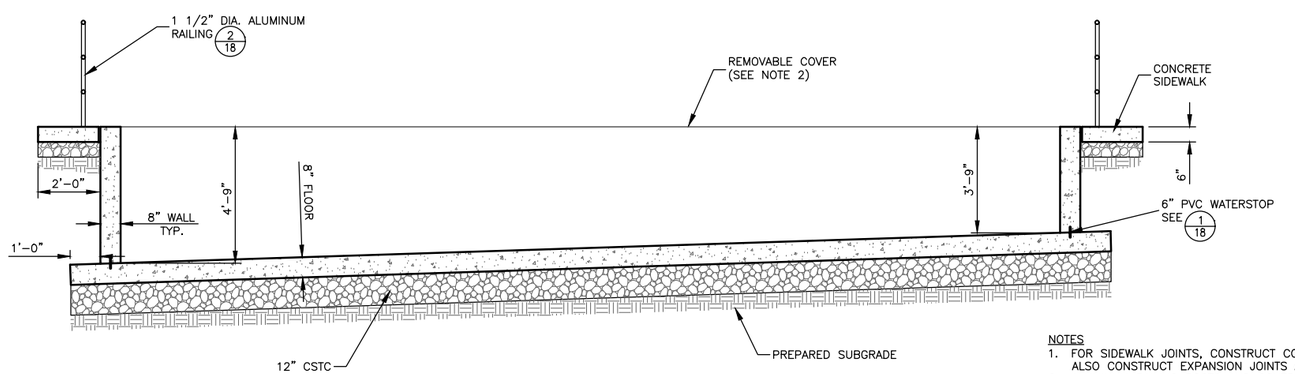

SECTION A-A

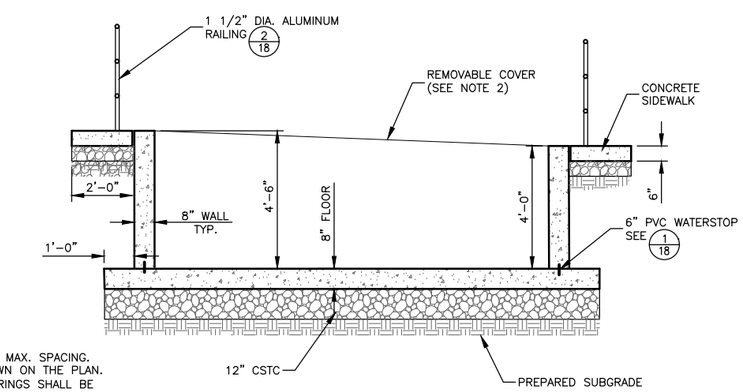

SECTION B-B

NOTES

1. FOR SIDEWALK JOINTS, CONSTRUCT CONTRACTION JOINTS 6' MAX. SPACING. ALSO CONSTRUCT EXPANSION JOINTS AT CORNERS AS SHOWN ON THE PLAN.
2. ALUMINUM RAILING POSTS AND COVER STRAPS/TENSION SPRINGS SHALL BE COORDINATED TO AVOID INTERFERENCE. SET DECK ANCHORS FOR TENSION SPRINGS FASTENERS ALONG INSIDE EDGE OF SIDEWALK. USE INDUSTRIAL GRADE COVER AND MANUFACTURER SUPPLIED ACCESSORIES. COVER SHALL BE HEAVY DUTY SOLID VINYL MATERIAL WITH A MINIMUM 15-YEAR WARRANTY. MANUFACTURER: COVERLOGIX, MODEL 1000V, GRAY WITH NO MESH DRAIN, OR APPROVED EQUAL. COVER SHALL BE POSITIONED SQUARE, EQUAL ON ALL SIDES, AND TAUGHT.
3. PROVIDE 120V REMOVABLE COVER PUMP (20-30 GPM) AS RECOMMENDED BY COVER MANUFACTURER.
4. PROVIDE 6' SWING GATES (X2) OF SAME DESIGN AND MATERIAL AS RAILING. GATE HARDWARE SHALL INCLUDE LOCKABLE LATCH AND HINGES THAT ALLOW GATE TO REMAIN IN OPEN POSITION WITHOUT PROTRUDING INTO ADJACENT ROAD. SUPPORT POSTS SHALL BE OF ADEQUATE SIZE TO SUPPORT GATES, AS RECOMMENDED BY MANUFACTURER.

1/17 EVAPORATION BASIN DETAIL

SCALE: 1" = 5'

NO.	REVISION DESCRIPTION	BY	DATE

PROJECT: 4-16108
DESIGNED: ML / TAP
DRAWN: ML / BAA
CHECKED: REC
APPROVED: TAP
DATE: MARCH 2017

TRAVIS A. PALE STATE OF WASHINGTON 38826 REGISTERED PROFESSIONAL ENGINEER 3-17-17

GreatWest engineering®
3363 N. LAKEHARBOR LANE
BOISE, ID 83703
(208)576-6046

CAROTHERS ROAD SOLID WASTE FACILITY
CONTACT WATER AND FIRE SUPPRESSION WATER HOLDING TANKS PROJECT

EVAPORATION BASIN STRUCTURAL DETAILS

SHEET NO.
17
OF 18

F:\4-16108-Whitman Co Contact Water Tank Project\CADD 4-16108\Sheets\4-16108-17-Details.dwg

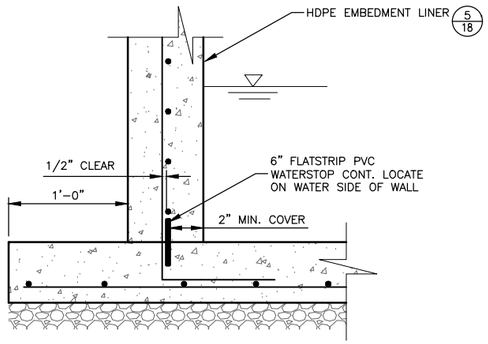

SINGLE MAT

NOTES:

1. WATERSTOP TO BE GREENSTREAK NO. 679 OR APPROVED EQUAL.
2. WATERSTOP TO BE CONTINUOUS W/ HEAT WELDED BUTT JOINTS.
3. APPLY TWO (2) COATS OF BOND BREAKER TO JOINT. DO NOT APPLY BOND BREAKER TO WATER STOP.

1/18 SLAB TO WALL WATERSTOP
NOT TO SCALE

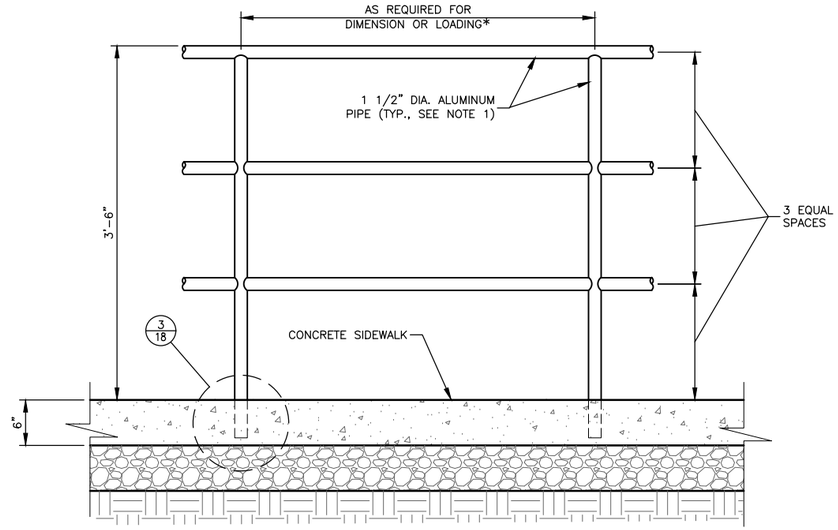

NOTES:

1. REFER TO SPEC SECTION 05521, PIPE AND TUBE RAILING.

2/18 ALUMINUM RAILING DETAIL
NOT TO SCALE

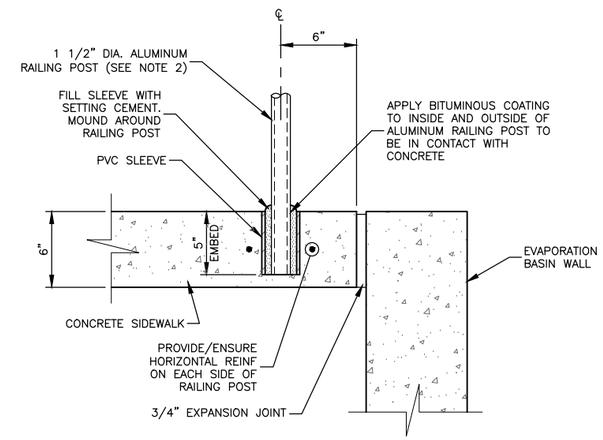

NOTES:

1. AT CONTRACTOR'S OPTION, RAILS MAY BE MECHANICALLY ATTACHED. ATTACHMENTS SHALL BE DESIGNED BY QUALIFIED PROFESSIONAL ENGINEER.
2. REFER TO SPEC SECTION 05521, PIPE AND TUBE RAILING.

3/18 RAILING ANCHORAGE DETAIL
NOT TO SCALE

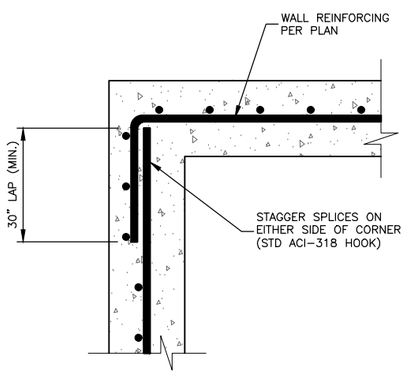

4/18 WALL CORNER REINFORCEMENT
NOT TO SCALE

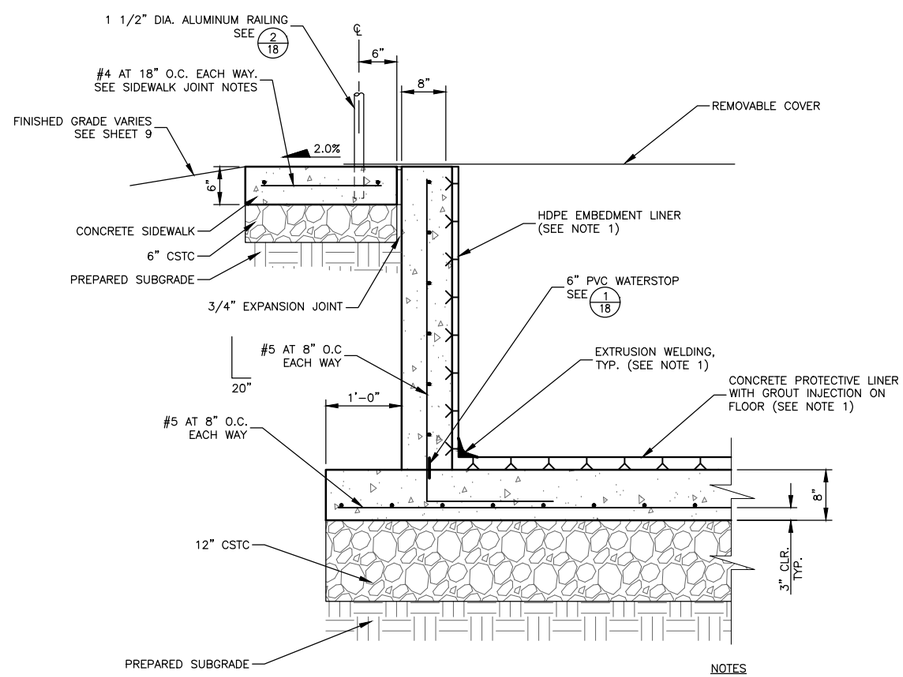

NOTES

1. REFER TO SPEC SECTION 02644, HDPE EMBEDMENT LINER

5/18 EVAPORATION BASIN DETAIL SECTION
NOT TO SCALE

NO.	REVISION DESCRIPTION	BY	DATE

PROJECT: 4-16108
DESIGNED: ML / TAP
DRAWN: ML / BAA
CHECKED: REC
APPROVED: TAP
DATE: MARCH 2017

GreatWest engineering®
3363 N. LAKEHARBOR LANE
BOISE, ID 83703
(208)576-6046

CAROTHERS ROAD SOLID WASTE FACILITY
CONTACT WATER AND FIRE SUPPRESSION WATER HOLDING TANKS PROJECT
EVAPORATION BASIN STRUCTURAL DETAILS

SHEET NO.
18
OF 18

F:\4-16108-Whitman Co Contact Water Tank Project\CADD 4-16108\Sheets\4-16108-18-Details.dwg

ATTACHMENTS

ATTACHMENT A

CQA PLAN

Carothers Road Solid Waste Facility Contact Water and Fire Suppression Water Holding Tanks Project

Construction Quality Assurance Plan

Prepared for

Whitman County, Washington

March 2017

Prepared By

GreatWest engineering ®

This document was prepared under the direct supervision of Travis A. Pyle a registered Professional Engineer in the State of Washington employed at Great West Engineering, Inc.

Table of Contents

1.0 INTRODUCTION 1
1.1 Purpose and Objectives 1
1.2 Key Terms 1
1.3 Background 2
2.0 ORGANIZATION, ROLES AND RESPONSIBILITIES 3
2.1 Project Organization 3
2.2 Owner 3
2.3 Engineer 3
2.4 Contractor 4
3.0 PERSONNEL QUALIFICATIONS 5
3.1 Owner 5
3.1.1 Project Manager 5
3.1.2 Owner's Site Representative 5
3.2 Engineer 5
3.2.1 Project Manager 5
3.2.2 CQA Inspector 6
3.2.3 Technical Support Staff 6
3.3 Contractor 6
4.0 CONSTRUCTION QUALITY ASSURANCE PROGRAM 7
4.1 Review and Observation 7
4.1.1 Pre-Construction 7
4.1.2 During Construction 7
4.1.3 Post-Construction 8
4.2 CQA Activities 9
4.2.1 General Earthwork 9
4.2.1.1 Observation Activities 9
4.2.1.2 Sampling and Testing 9
4.2.1.3 Acceptance/Rejection Criteria 10
4.2.2 Subgrade Preparation 11
4.2.2.1 Observation Activities 11
4.2.2.2 Sampling and Testing 11
4.2.2.3 Acceptance/Rejection Criteria 11

4.2.3 Contact Water System Piping 12
4.2.3.1 Observation Activities 12
4.2.3.2 Sampling and Testing 13
4.2.3.3 Acceptance/Rejection Criteria 14
4.2.4 Contact Water System Lift Stations 14
4.2.4.1 Observation Activities 15
4.2.4.2 Sampling and Testing 15
4.2.4.3 Acceptance/Rejection Criteria 15
4.2.5 Contact Water Tanks 16
4.2.5.1 Observation Activities 16
4.2.5.2 Sampling and Testing 16
4.2.5.3 Acceptance/Rejection Criteria 16
4.2.6 Contact Water Evaporation Basin 17
4.2.6.1 Observation Activities 17
4.2.6.2 Sampling and Testing 18
4.2.6.3 Acceptance/Rejection Criteria 18
5.0 PROJECT MEETINGS 20
5.1 Pre-Construction Meeting 20
5.2 Weekly Progress Meetings 21
5.3 Work Deficiency Meetings 21
5.4 Other Meetings 22

List of Tables

Table 2-1 - Owner/Engineer Project Team Members 4
Table 4-1 - Sampling and Testing for General Earthwork.... 10
Table 4-2 - Corrective Measures for General Earthwork 11
Table 4-3 - Testing/Observations for Subgrade Preparation 12
Table 4-4 - Corrective Measures for Prepared Subgrade 12
Table 4-5 - Testing/Observations for Contact Water System Piping.... 14
Table 4-6 - Corrective Measures for Contract Water System Piping.... 14
Table 4-7 - Testing/Observations for Contact Water System Lift Stations.... 15
Table 4-8 - Corrective Measure for Contact Water System Lift Stations 16
Table 4-9 - Testing/Observations for Contact Water Tanks 17

Table 4-10 - Corrective Measures for Contact Water Tanks 17
Table 4-11 - Testing/Observations for Contact Water Evaporation Basin 18
Table 4-12 - Corrective Measures for Contact Water Evaporation Basin..... 19

1.0 INTRODUCTION

This Plan presents the construction quality assurance (CQA) methods and procedures that will be implemented during the construction of the Contact Water and Fire Suppression Water Holding Tanks Project ("Project") at the Carothers Road Solid Waste Facility ("Facility") in Whitman County, Washington. The Plan has been prepared to meet construction quality assurance (CQA) requirements as specified in Washington Administrative Code (WAC) 173-350-330 for the proposed tanks that will hold contact water (leachate) affiliated with municipal solid waste (MSW) transfer operations at the facility, and therefore, emphasizes CQA activities specifically related to the installation of these tanks and the adjoining and associated infrastructure. This project includes two double-walled underground storage tanks that will hold contact water and an at-grade, partially buried lined concrete evaporation basin that will be used seasonally to evaporate contact water. The fire suppression water holding tank portion of the project is not included as part of this Plan.

Whitman County is the Owner of the project and will hire a qualified construction contractor (Contractor) to construct the project. The Contractor is responsible for its own construction quality control (CQC) during all phases of the Project. The Contractor's CQC requirements are included in the Contract Documents for the project. A qualified professional engineer (Engineer) will be hired directly by the County to provide third-party construction quality assurance (CQA) inspection. The roles and responsibilities of each party are described in more detail in Section 2.

1.1 Purpose and Objectives

The primary purpose of this Plan is to identify methods and procedures that will be used by the Engineer for CQA inspection of the portions of the Project that are regulated under WAC 173-350-330 in order to obtain independent, documented confirmation that the standards of quality required by the Contract Documents have been met.

This Plan provides the following:

- Identifies the organization, roles, and responsibilities of individuals who will be responsible for implementing quality for the project during construction.
- Briefly summarizes the minimum qualifications of lead project participants from the Owner's, Engineer's, and Contractor's organizations.
- Describes key activities that will take place and processes that will be used to meet quality standards, including review and observation functions, acceptance/rejection criteria that will be followed, and corrective measures to be used when deficiencies are found.

1.2 Key Terms

Three related, but independent processes, will be implemented during the construction to verify that the standards of quality identified in the Contract Documents are met. These processes are CQA, CQC, and Construction Administration and Management (CA&M). Definitions of these terms and the identification of parties responsible for each of these processes is as follows:

- **Construction Quality Assurance (CQA):** Refers to a planned system of activities that provide assurance and documentation that the required project elements are constructed as specified in Contract Documents and that the materials used in construction are manufactured according to

specifications. CQA generally includes inspections, verifications, audits, and evaluations of materials and workmanship necessary to determine and document the quality of the constructed facility. For this Project, the evaluation of materials and workmanship includes oversight and witnessing of construction activities, sampling, and testing. CQA observations will be performed by the Owner's PM in concert with the Engineer, as an independent, "third-party" organization hired directly by the Owner, or Engineer's designee.

- **Construction Quality Control (CQC):** Refers to a planned system of actions used to monitor and control the quality and workmanship of the construction, and are coordinated measures undertaken by the Contractor and its subcontractors and suppliers to verify compliance with the Contract Documents. CQC includes survey, inspections, and sampling & testing to directly monitor the quality of all furnished, constructed, and installed components. CQC activities are the responsibility of the Contractor. They may be independent of CQA activities that may require sampling and testing; however, they must to be coordinated with CQA activities.
- **CA&M.** Refers to those activities taken to control and administer the construction project, including conducting project meetings, monitoring project schedules, reviewing and acting on requests for payment, and coordinating changes to Contract Documents resulting from changed site conditions or the selection of alternative methods of construction or installation. The Owner and Engineer will be jointly responsible for these activities working collaboratively with the Contractor in order to document the Work.

1.3 Background

The center of Whitman County's solid waste management system is the County-owned and operated Carothers Road Solid Waste Facility. The Facility is located approximately one-half mile west of State Highway 195 between Pullman and Colfax, and adjacent to the old closed MSW landfill and an active limited purpose landfill (LPLF). Municipal solid waste (MSW) materials are collected by licensed, commercial haulers and public self-haulers. The waste is dropped off at the Facility, consolidated, and then transported by long-haul truck to a train depot in Spokane where it is hauled by rail to a regional landfill. The Facility was recently improved by the addition of a new waste transfer building, a separate access for commercial trucks with separate scaling, a new z-wall for green waste tipping, and other site improvements. The improvements project was completed in 2015.

Since 2009, the County has hauled contact water to the Colfax Wastewater Treatment Plant (WWTP) three separate years to avoid overtopping the contact water lagoon. It is estimated that 15,000 gallons to 25,000 gallons of contact water were hauled to the Colfax WWTP on each of the three occasions. During some of the other years since 2009, the lagoon's water surface exceeded the 18-inch minimum freeboard required by the operating permit, and as such, was out of compliance for several months until the water evaporated to drop the water below the minimum freeboard level. The improvements to the contact water management system at the Facility includes underground tanks for collection and storage and provides provisions for haul-out of the contact water by tanker truck. It also includes adding a high-density polyethylene (HDPE) lined concrete basin with a with removable cover and a lift station to evaporate the contact water during the evaporative periods of the year.

2.0 ORGANIZATION, ROLES AND RESPONSIBILITIES

Location The major parties involved in the construction of this project are the Owner, the Engineer, and the Contractor, as defined in the Contract Documents for the Project. Of these parties, only the Owner and Contractor are parties to the construction Contract. The Engineer will serve as the representative of the Owner for the purpose of providing engineering support during construction, as requested by the Owner, and third-party CQA inspection services. The Engineer and Owner have a separate agreement for these services.

2.1 Project Organization

The assignment of responsibilities for the Project is as follows:

- Construction Contract Execution — Owner
- Construction Administration and Management — Owner/Engineer
- Construction Quality Control — Contractor
- Third-Party Construction Quality Assurance — Engineer (with support from Owner)
- Technical Assistance During Construction — Engineer

2.2 Owner

The Owner of the project is Whitman County. The Owner is responsible for executing all administrative aspects of the contract. The Owner is represented by the Owner's Project Manager (PM) who will also be Owner's Site Representative. The Owner has final authority for approval of the contract, all claims, any change orders and amendments, and all pay applications, and has overall control of all materials directly and indirectly through the Engineer. The Engineer's project team members will assist and advise the Owner in these matters, as necessary. In addition, the Owner is responsible for ongoing operation of the Facility during construction.

The Owner will also provide the on-staff Geotechnical Engineer to provide input and direction on construction materials and techniques. Refer to the Geotechnical Findings and Recommendation Letter from the Owner (Mark Storey, PE) dated March 10, 2017.

2.3 Engineer

The Engineer for this project will perform the third-party construction quality assurance (CQA) inspection in conformance with WAC 173-350, as described in this Plan and the technical specifications for the project, and in accordance with the Engineer's agreement with the Owner.

In addition, the Engineer will provide engineering (technical) support during construction on an as-needed basis and at the request of the Owner. The Engineer's project staff will consist of both office support and field staff. The Engineer's office support staff will include a Project Manager, who will be responsible for maintaining communications with the Owner and providing continuity with the design phase of the project, and technical support staff who will be responsible for handling design-related services and third-party CQA services.

2.4 Contractor

The contractor for this project will have the authority and responsibility to perform construction activities within the limits of the binding terms of the Contract Documents between the Owner and the Contractor. To accomplish the work, the Contractor will designate individuals to serve as the Contractor's PM and Contractor's Superintendent and/or Foreman who oftentimes also serve as the Contractor's Quality Manager for the duration of the project.

The Contractor will be responsible for all CQC-related work activities assuring that quality products and workmanship are incorporated into the project and meet the requirements of the Contract Documents. Specifically, the Contractor will be responsible for providing evidence of the Contractor's and subcontractor's qualifications, preparing and submitting CQC documentation and certifications, and performing the work in conformance with the Contract Documents. The Contractor's responsibilities are fully defined in the Contract Documents and also include all work that the Contractor may delegate to subcontractors and its suppliers.

The Contractor is responsible for the development of the construction schedule and maintaining that schedule. The schedule is intended to provide a basis for the Contractor to manage progress and initiate corrective action as necessary. It is also the responsibility of the Contractor to maintain and conduct its operations and the operations of its subcontractors and suppliers in a safe manner.

Table 2-1 lists the project team members for the Owner and Engineer who will participate in project decisions during the construction.

Table 2-1 - Owner/Engineer Project Team Members

Name	Title	E-mail	Phone
Owner – Whitman County			
Mark Storey, PE	Public Works Director/County Engineer "Geotechnical Engineer"	mark.storey@co.whitman.wa.us	509-397-5204
David Nails	Solid Waste Supervisor – Project Manager (and Owner's Site Representative)	dave.nails@co.whitman.wa.us	509-334-2400
Engineer – Great West Engineering			
Travis Pyle, PE	Project Manager/Lead CQA Inspector	tpyle@greatwesteng.com	208-576-6671
Technical Support Team:			
Michelle Langdon, PE	Lead Civil	mlangdon@greatwesteng.com	208-576-6665
Karl Yakawich, PE	Lead Structural	kyakawich@greatwesteng.com	406-495-6182

3.0 PERSONNEL QUALIFICATIONS

This section presents a summary of the minimum qualifications required for the key project personnel represented by the Owner, Engineer, and Contractor. Specific qualification requirements for the Contractor and Contractor's fabricators and suppliers can be found in the Contract Documents.

3.1 Owner

The Owner's representative on this project will serve as both the PM and the Owner's Site Representative. Owner will also supply the Geotechnical Engineer.

3.1.1 Project Manager

As the Owner's PM, this individual will have sufficient practical, technical, and managerial experience and background to coordinate with Engineer and Contractor in addressing contract administration and design-related issues that arise during construction.

3.1.2 Owner's Site Representative

As the Owner's Site Representative, this individual will also have sufficient practical and technical experience and background to oversee field work and coordination of CQA activities with the Engineer. This individual will have with technical support of his staff and the Engineer the following:

- An understanding of the importance and interrelationship of CQA and CQC.
- Knowledge of specific practices associated with this project.
- Knowledge of observation and testing procedures.
- Ability to maintain clear and organized records.

3.2 Engineer

3.2.1 Project Manager

The Engineer's PM will have sufficient practical, technical, and managerial experience and background to coordinate with the Owner, the Contractor, and the Engineer's staff in addressing contract administration, design-related issues, and quality-related issues that might arise during construction. This individual will be responsible for maintaining communication with the Owner and Contractor and for providing continuity with the design of the project.

3.2.2 CQA Inspector

The Engineer's CQA Inspector will have sufficient practical and technical experience and background with construction CQA and will be the field coordinator of CQA-related activities on the project related to the contact water system as required by WAC 173-350-330, whereby working collaboratively with the Owner's PM, the Engineer's PM, and the Contractor.

3.2.3 Technical Support Staff

The Engineer's PM will consult with technical support staff during the course of construction when handling CQA activities outside his area of expertise or experience, encountering unexpected conditions, and/or witnessing unusual test results. Each technical support staff member will have expertise in the specific subject area for which he or she is consulted.

3.3 Contractor

The construction contractor must be licensed by the State of Washington and meet all of the requirements as specified in the Contract Documents. In addition, the Contractor will be required, as also specified in the Contract Documents, to demonstrate qualifications and experience of subcontractors performing specialized components of the work. Key personnel include the Contractor's PM and the Field Superintendent/Foreman, who will oftentimes also administer Contractor's CQC program as the Quality Manager.

4.0 CONSTRUCTION QUALITY ASSURANCE PROGRAM

This section describes CQA activities and processes that will be implemented during construction by the Engineer in collaboration with the Owner. For this project, these activities primarily include review of submittals and field observation of key components of the work associated with the contact water system. CQA also includes witnessing sampling and testing conducted by the Contractor, the use of acceptance/rejection criteria, and the identification of corrective measures as they apply to the project.

4.1 Review and Observation

The review and observation function of the CQA program will involve review, witnessing, and logging of the Contractor's submittals and work methods to confirm that products and methods meet the requirements of the specifications. These efforts will take place before, during, and after construction as follows:

4.1.1 Pre-Construction

The Engineer's PM, Engineer's CQA Inspector, and Owner's PM will familiarize themselves with the project design and observation procedures by:

- Reviewing and becoming familiar with project drawings and specifications and this Plan.
- Reviewing existing reports that pertain to the construction of the Facility.

Once familiar with the project requirements, the Engineer's PM and Owner's PM will carry out the following pre-construction review and observation functions:

- Reviewing the construction schedule.
- Reviewing Contractor's and supplier's/installers' certifications, submittals, test results, material sources, and samples of earth and synthetic materials for acceptance requirements described in the specifications and this Plan.
- Reviewing imported material submittals and, if necessary, visiting material sources.
- Reviewing tanks and synthetic material submittals, finished product specifications, and manufacturer's factory test results.
- Verifying the receipt of tanks and all synthetic materials documentation as required in the specifications before synthetic materials are accepted.
- Reviewing transportation, unloading, handling, and storage procedures for the tanks and synthetic materials.
- Reviewing Contractor's and installers' proposed construction procedures for design and specification compatibility and constructability.

4.1.2 During Construction

Construction oversight by the Owner's PM and the Engineer's CQA Inspector, in collaboration with the Engineer's PM, will include, but is not limited to, the following:

- Verifying that required submittals have been submitted for review.
- Reviewing Contractor's submittals, samples, and supporting test reports and verifying that documentation required by the specifications have been received and are in compliance.
- Confirming that products and materials are consistent with requirements specified in the Contract Documents.
- Observing that equipment does not damage tanks or synthetic materials.
- Recording damage and repairs to products or equipment.
- Observing all phases of the construction, documenting the contractor's compliance or noncompliance with the contract documents, and verifying the correction of defective work.
- Reviewing the Contractor's work progress schedules.
- Observing that people working on the project do not smoke or engage in work activities that could damage the materials.
- Confirming that lines and grades have been verified by the Contractor prior to subsequent component construction.
- Checking that the project piping, trenching, and grading work have been performed in conformance with Contract Documents.
- Witnessing Contractors performance and start-up system compliance testing.
- Witnessing Contractor's collection samples and CQC testing, reviewing CQC test results, and communicating test results to the Contractor.
- Reviewing construction record drawings kept by the Contractor for adequate documentation of the work and changes to the work.

These oversight activities will not relieve the Contractor from meeting the requirements, including Contractor's CQC procedures, set forth in the Contract Documents.

4.1.3 Post-Construction

Upon completion of the project, post-construction inspections (Punch-List Walk Through for Substantial Completion and Final Completion Walk-Through) will be conducted by the Engineer's PM, the Owner's PM and the Contractor's personnel to check for any material and placement imperfections and identify those areas that require corrective action by the Contractor. The Owner's PM, Engineer's PM, and/or CQA Inspector will inspect the following, including but not limited to:

- Correctness of final grades and other dimensions (also with as-built survey checks from the office using the Contractor's as-built surveys).
- Areas that have been excessively disturbed or eroded by rainfall during construction or as a result of construction activities.
- Damage to permanent structures in the vicinity of construction that may have resulted from construction activities.
- Surface restoration of disturbed areas.
- Start-up and functionality of the system components.

Post-construction will also include project closeout, including Contractor's submission of as-built drawings. These will be reviewed by the Owner and Engineer to assure that all changes and modifications have been properly noted and documented in the drawing set.

4.2 CQA Activities

CQA activities associated with the contact water system include:

- General Earthwork
- Subgrade Preparation
- Contact Water System Piping and Valving
- Contact Water System Lift Stations
- Contact Water Tanks
- Contact Water Line Concrete Evaporation Basin

4.2.1 General Earthwork

Coordinate with Section 02221, Trenching; Section 02232, Site Preparation, and 02300, Earthwork of the Contract Documents.

4.2.1.1 Observation Activities

- Confirm Contractor has retained a professional land surveyor (PLS) licensed in the State of Washington who will perform surveying necessary for project layout and control, quantity measurements, and as-built information in accordance with the Contract Documents.
- Confirm excavation limits and fill limits and depths by interfacing with the Contractor's surveyor and/or providing Owner surveyor for independent checks.
- Observing the specification requirements for imported materials are met.
- Verifying compaction requirements have been met.
- Verifying that surfaces are kept in a drained condition.
- Observing the type of equipment, number of passes, and moisture conditioning used in compaction and identifying areas that have been poorly compacted or left un-compacted.
- Observing any visible signs of material changes and checking for the presence of hard soil clods and large stones.
- Witnessing material placement and field compaction testing to verify that compaction levels meet minimums per specification.
- Observing and documenting corrective measures.

4.2.1.2 Sampling and Testing

Sampling and testing requirements for General Earthwork are defined in the above listed specification sections of the Contract Documents. These requirements are also summarized in Table 4-1.

4.2.1.3 Acceptance/Rejection Criteria

All material limits shall be constructed within tolerances stated in the Contract Documents. All grading shall be performed to maintain uniform slopes and grades. No reverse slopes are permitted. Criteria for acceptance or rejection of Earthwork are described in the Contract Documents and are also summarized in Table 4-1. Corrective measures are described in Table 4-2.

Table 4-1 - Sampling and Testing for General Earthwork

Test	Method	Proposed Test Frequency	Acceptance Criteria/ Specification	Contractor's Responsibilities	Engineer's Responsibilities
Moisture-Density Relationships (Proctors): reuse of native materials (General Earthfill or Select Fill)	ASTM D1557	One per material type and with any deviation observed by Engineer	Not applicable	Coordinate sampling and testing with Contractor's independent testing lab	Review certified test results; communicate reviewed results to Contractor
Moisture-Density Relationships (Proctors): Imported Materials	ASTM D1557	One per material type and with any deviation observed by Engineer	Not applicable	Coordinate sampling and testing with Contractor's independent testing lab	Review certified test results; communicate reviewed results to Contractor
Grain Size/Index Testing (for Import materials)	Various – See Specs for Sourcing; Visual During Placement	During Sourcing and Placement	See specs for index testing requirements; Observe during placement of the material	Make sure import material sourcing and materials used meet the approved submittals; provide material test results to Engineer for approval.	Review certified test results; communicate reviewed results to Contractor; observe material placement and identify any visible signs of material deviation.
Grain Size: General Earthfill/Select Fill (reuse of onsite material)	Visual	During placement	Observe during placement of the material	Make sure reuse of onsite materials meet the approved submittals; provide material test results to Engineer for approval.	Review certified test results; communicate reviewed results to Contractor; observe material placement and identify any visible signs of material deviation.
Field density and moisture: Tank Fill and Backfill (Primary Fill)	ASTM D6938 (Nuclear Gauge Test)	Frequency as specified in the Specifications	Refer to Specs for minimum density	Coordinate testing with Contractor's independent testing lab	Witness field tests; document results, and communicate issues to Contractor
Field density and moisture: Trench Backfill	ASTM D6938 (Nuclear Gauge Test)	Frequency as specified in the Specifications	Refer to Specs for minimum density	Coordinate testing with Contractor's independent testing lab	Witness field tests; document results, and communicate issues to Contractor

Table 4-2 - Corrective Measures for General Earthwork

Condition	Corrective Measure
Slopes or elevations not as designed	Place additional soil to required grade, or remove, as applicable to conform to grades shown in Contract Document Drawings
Imported material not acceptable	Remove and replace any rejected material
Compaction (Density) Not Achieved	Add moisture, provide additional compaction effort and/or change equipment, as necessary. Refer also to Subgrade Preparation for Moisture Conditioning.
Soft or loose areas	Sub-excavate, re-compact, rework, or stabilize as necessary.

4.2.2 Subgrade Preparation

Coordinate with Section 02300, Earthwork of the Contract Documents.

4.2.2.1 Observation Activities

- Verifying that ruts, depressions, and irregularities are filled in and compacted to the specified relative compaction.
- Verifying that design grades are achieved in the field within the specified tolerances.
- Verifying compaction requirements have been met.
- Verifying that surfaces are kept in a drained condition.
- Identifying soft or loose zones (unsuitable subgrade areas) requiring over-excavation and replacement (stabilization).
- Witnessing in-place density (nuke gauge) testing.
- Observing and documenting corrective measures.

4.2.2.2 Sampling and Testing

Sampling and testing for Subgrade Preparation are defined in the above listed specification section of the Contract Documents. These requirements are also summarized in Table 4-3.

4.2.2.3 Acceptance/Rejection Criteria

Criteria for acceptance or rejection of Subgrade Preparation are described in the Contract Documents and listed in Table 4-3. Corrective measures are described in Table 4-4.

Table 4-3 - Testing/Observations for Subgrade Preparation

Test	Method	Proposed Test Frequency	Proposed Criteria/Specification	Contractor's Responsibilities	Engineer's Responsibilities
Moisture-Density Relationships	ASTM D1557	Minimum three (3) tests ; additional testing is required for any observed changes	Not applicable	Notification of materials onsite ready for testing; coordinate with Owner and Engineer to witness testing.	Review laboratory testing and cross-check with materials delivered and used onsite.
Field density and moisture content	ASTM D6938 (nuclear gauge)	Minimum six per acre, or as directed by Geotechnical Engineer	95% relative compaction	Notification of areas ready for testing; coordinate with Owner and Engineer to witness testing.	Witness field density testing, coordinate with laboratory proctors, and confirm compaction requirements meet specifications.

Table 4-4 - Corrective Measures for Prepared Subgrade

Condition	Corrective Measure
Slopes or elevations not as designed	Place additional soil to required grade, or remove, as applicable to conform to grades shown in Contract Documents
Soft, loose, or damaged areas	Re-compact or remove unsuitable subgrade materials and replace as necessary
Moisture content too low	Sprinkle soil with water and mix uniformly prior to compacting
Moisture content too high	Aerate by scarifying/rotovating prior to compacting
Areas below minimum compaction	Re-compact as necessary

4.2.3 Contact Water System Piping

Coordinate with Section 02665, Pipes, Valves and Appurtenances of the Contract Documents.

4.2.3.1 Observation Activities

General Piping:

- Verifying that all submittals have been received and approved, and cross-checking that the material that arrives onsite is what has been approved by the Engineer.
- Observing that the piping materials that are delivered to the site are not damaged.
- Verifying that pipe diameters and wall thicknesses (standard dimension ratio [SDR]) are as specified for the specific applications as they are readied and placed.

- Observing that piping is handled and stored onsite in accordance with the manufacturer's recommendations. Checking that pipe welder certifications are received and are acceptable.
- Observing piping is clean during installation.
- Observing that proper torques are applied to fasteners at flanged connections and that anti-seize lubricant is applied correctly.
- Verifying that cleanouts are installed at the locations shown on the drawings.
- Observing that piping fittings and appurtenances are installed per manufacturer's recommendations.
- Observing that trenches are backfilled according to specifications.
- Observing that manufacturer's installation procedures are followed during installation of fittings, couplers, and unions.
- Witnessing pressure testing; and noting that the installer follows procedures specified for pressure testing the pipe and noting pressures maintained and pressure changes with associated time intervals during the tests.
- Observing that there is uniform, minimum slope for gravity pipes, where required.
- Observing that the installer isolates portions of the system on which work is being done and provides notifications to Owner in accordance with the Contract Documents.
- Witnessing leak testing and confirming leakage rate, if any, with the Contractor for acceptance.

HDPE Piping:

- Observing that piping is not abraded, nicked or damaged in excess of the specification requirements during storage, handling, or construction.
- Observing that pipe fusion machine facing knives provide smooth square butt ends that mate with no gaps in preparation for all butt fusion welds.
- Observing that the fusion plate is at proper temperature prior to and during fusion and that no pressure is put on pipe during pipe softening and melting.
- Observing that the welded bead is the proper size.
- Observing that manufacturer's minimum bending radius for pipes are followed.

SST Piping:

- Checking that shop drawings for preassembled/welded piping have been received and approved by the Engineer.
- Checking that any field welding is done in accordance with best practices and by a certified welder.

4.2.3.2 Sampling and Testing

Sampling and testing for the Contact Water System Piping is defined in the above listed specification section of the Contract Documents. These requirements are also summarized in Table 4-5.

4.2.3.3 Acceptance/Rejection Criteria

Criteria for acceptance or rejection of Contact Water System Piping are described in the Contract Documents and listed in Table 4-5. Corrective measures are described in Table 4-6.

Table 4-5 - Testing/Observations for Contact Water System Piping

Test/Observation	Method	Proposed Test Frequency	Acceptance Criteria/ Specification	Contractor's Responsibilities	Engineer's Responsibilities
Pipe Cleaning	Visual	Prior to installation	Remove all cuttings, dirt, and debris	Conduct cleaning; notify Engineer before installation	Witness and confirm cleaning
Damage	Visual and caliper measurements	Before assembly and installation	Nicks, gouges, and cuts less than 10 percent of wall thickness are acceptable (HDPE piping)	Inspect	Witness and confirm inspection
Leak testing	Hydrostatic Pressure Testing or Low-Pressure Air Testing	After pipe is completed and after the entire conveyance system is installed	Per Contract Specifications	Supply calculations for test parameters; conduct test	Witness test and review results
Pipe slope	Visual and survey	After each section of pipe is completed	Minimum slope requirements where applicable	Grade uniformly; survey control	Witness survey and/or measure with digital carpenter's level
Fastener torque	Visual inspection	Spot check after demonstration by contractor of proper procedures	Manufacturer's requirements	Use torque wrench for fasteners	Witness torque wrench for readings

Table 4-6 - Corrective Measures for Contract Water System Piping

Condition	Corrective Measure
Cuttings, dirt, grit or other foreign material emerges from end of pipe after cleaning	Continue cleaning until no material is seen to emerge from the pipe end
Damage to pipe exceeds specifications piping products	Supplier to replace the damaged piece(s) or blend out and fill damaged section per manufacturer's written instructions
Pipe fails pressure test	Identify defective weld/pipe section and repair
Removal of nuts in stripped threads	Replace damaged fasteners and apply anti-seize compound
Inadequate pipe slope or sags in piping	Add additional soil material or re-grade material under pipe and re-compact

4.2.4 Contact Water System Lift Stations

Coordinate with the plans and with Section 01800, Equipment and Facility Startup of the Contract Documents.

4.2.4.1 Observation Activities

- Confirm all submittals have been received and approved by the Engineer.
- Coordinate with Earthwork observation activities for installing the lift station sump/wet well.
- Coordinate with Piping observation activities for connecting lift stations to adjoining piping.
- Make sure that lift station system supplier is onsite and signs off on the installation.
- Confirm system functional and performance work plans have been received and approved by Engineer, and are coordinated with the Owner.
- Witness leak testing of the sumps/wet wells and acceptance.
- Witness functional and performance testing.

4.2.4.2 Sampling and Testing

Sampling and testing for Contact Water System Lift Stations are defined on the plan sheets and in the above listed specification section of the Contract Documents. These requirements are also summarized in Table 4-7.

4.2.4.3 Acceptance/Rejection Criteria

Criteria for acceptance or rejection of Contact Water System Lift Stations are described in the Contract Documents and listed in Table 4-7. Corrective measures are described in Table 4-8.

Table 4-7 - Testing/Observations for Contact Water System Lift Stations

Test/Observation	Method	Proposed Test Frequency	Acceptance Criteria/ Specification	Contractor's Responsibilities	Engineer's Responsibilities
Sump/Wet Well Cleaning	Visual	Prior to installation	Remove all cuttings, dirt, and debris	Conduct cleaning; notify Engineer before installation	Witness and confirm cleaning
Damage	Visual	Before assembly and installation	No signs of damage	Inspect	Witness and confirm inspection
Leak testing	Hydrostatic Pressure Testing	After Lift Station Sumps are installed and all piping is connected (and plugged off)	No leakage	Conduct leakage test	Witness test and review results
System Functional and Performance Testing	Demonstrate Operation in accordance with the specifications	Startup and Performance Demonstration	Per Contract Specifications	Coordinate with Supplier Representative, Owner and Engineer and conduct all testing	Witness testing and confirm system functionality and performance for acceptance

Table 4-8 - Corrective Measure for Contact Water System Lift Stations

Condition	Corrective Measure
Cuttings, dirt, grit or other foreign material in the sump or wet well	Continue cleaning until no material remains
Damage to products	Supplier to replace the damaged piece(s)
Sumps or Wet Wells fail hydrostatic leak test	Identify defective areas, plug leaks, and retest
System fails startup test	Repair and repeat until testing is acceptable by Engineer
System fails performance test	Repair and repeat until testing is acceptable by Engineer

4.2.5 Contact Water Tanks

Coordinate with Section 02668, Underground Storage Tanks of the Contract Documents.

4.2.5.1 Observation Activities

- Confirm all submittals have been received and approved by the Engineer.
- Coordinate with Earthwork observation activities for installing the tanks.
- Coordinate with Piping observation activities for connecting tanks to adjoining piping.
- Make sure that tank supplier is onsite and signs off on the installation.
- Witness backfilling around and over the tanks and deformation measures ensuring they are within acceptable levels.
- Witness leak testing of the tanks.
- Witness functional and performance testing of the instrumentation and control systems for the tanks.

4.2.5.2 Sampling and Testing

Sampling and testing for the Contact Water Tanks are defined in the above listed specification section of the Contract Documents. These requirements are also summarized in Table 4-9.

4.2.5.3 Acceptance/Rejection Criteria

Criteria for acceptance or rejection of Contact Water Piping are described in the Contract Documents and listed in Table 4-9. Corrective measures are described in Table 4-10.

Table 4-9 - Testing/Observations for Contact Water Tanks

Test/Observation	Method	Proposed Test Frequency	Acceptance Criteria/ Specification	Contractor's Responsibilities	Engineer's Responsibilities
Tank Interior is Clean	Visual	Prior to installation	Remove all cuttings, dirt, and debris	Conduct cleaning; notify Engineer before installation	Witness and confirm cleaning
Damage/Deformation	Visual and Deformation Measurements	Before assembly and installation – Refer to Specification for inspection on truck, staging and during installation	No signs of damage or deformation	Inspect and measure	Witness and confirm inspection and measurements.
Leak testing	Testing as Required by the Manufacturer's Guidelines	After tanks are installed and plumbed.	No leakage	Conduct leakage testing	Witness test and review results
System Functional and Performance Testing	Demonstrate Operation in accordance with the specifications	Startup and Performance Demonstration of all instrumentation and controls	Performing in accordance with manufacturer's guidelines and as signed off my installation representation	Coordinate with Supplier Representative, Owner and Engineer and conduct all testing	Witness testing and confirm system functionality and performance for acceptance

Table 4-10 - Corrective Measures for Contact Water Tanks

Condition	Corrective Measure
Cuttings, dirt, grit or other foreign material in the sump or wet well	Continue cleaning until no material remains
Damage to products, excessive deformation of the tanks	Supplier to replace the damaged piece(s)
Tanks fail leak test	Identify defective areas, plug leaks, and retest
System fails startup test	Repair and repeat until testing is acceptable by Engineer
System fails performance test	Repair and repeat until testing is acceptable by Engineer

4.2.6 Contact Water Evaporation Basin

Coordinate with Section 02644, HDPE Embedment Liner and Division 3, Concrete of the Contract Documents.

4.2.6.1 Observation Activities

- Confirm all submittals have been received and approved by the Engineer.
- Coordinate with Earthwork observation activities for structural subgrade and backfilling requirements.
- Coordinate with Piping observation activities for adjacent piping.

- Observe placement and compaction testing of the subgrade for the basin. Observe inspection of the rebar by the County's building inspector for sign-off of the structure.
- Make sure that liner supplier is onsite and signs off on the installation of the wall and floor liners with no damage caused by the concrete formwork and rebar.
- Observe pouring of the slab, installation of water stops, and pouring of the walls.
- Observe collection of concrete cylinders and check that laboratory strength testing meets the minimum requirements of the specifications.
- Observe leak testing of the basin (filling and 24-hour water level measurement).

4.2.6.2 Sampling and Testing

Sampling and testing for the Contact Water Evaporation Basin are defined in the above listed specification section of the Contract Documents. These requirements are also summarized in Table 4-11.

4.2.6.3 Acceptance/Rejection Criteria

Criteria for acceptance or rejection of Contact Water Evaporation Basin are described in the Contract Documents and listed in Table 4-11. Corrective measures are described in Table 4-12.

Table 4-11 - Testing/Observations for Contact Water Evaporation Basin

Test/Observation	Method	Proposed Test Frequency	Acceptance Criteria/ Specification	Contractor's Responsibilities	Engineer's Responsibilities
Basin Interior is Clean	Visual	Before floor liner is installed and at completion of the bottom liner installation.	Remove all cuttings, dirt, and debris	Conduct cleaning; notify Engineer	Observe and confirm cleaning
Damage	Visual	After forms are pulled and during backfilling for the concrete structure, and liner damage during concrete formwork and rebar	No signs of damage	Instruct and watch closely their subcontractors and ensure no damage	Observe and confirm inspection of no damage.
Liner Seaming	Visual and Spark Testing	Continuously during liner seaming and spark testing operations.	Per Contract Specifications	Ensure Subcontractor's testing is done in accordance with specifications	Observe seaming start-ups and period checks, and during main liner seaming operations; observe spark testing.
Leak testing	Hydrostatic	After basin is completed.	No measureable change in water level (no leakage)	Conduct leakage testing	Observe test and measurements

Test/Observation	Method	Proposed Test Frequency	Acceptance Criteria/ Specification	Contractor's Responsibilities	Engineer's Responsibilities
System Functional and Performance Testing	Demonstrate Operation in accordance with the specifications (Coordinated with the Lift Station Unit Process Testing)	Startup and Performance Demonstration	Functioning and performing in accordance with the design and specifications.	Coordinate with lift station testing, and the Owner and Engineer	Observe testing and confirm system functionality and performance for acceptance

Table 4-12 - Corrective Measures for Contact Water Evaporation Basin

Condition	Corrective Measure
Cuttings, dirt, grit or other foreign material in the sump or wet well	Continue cleaning until no material remains
Damage to Concrete	Repair or replace as directed by Engineer
Damage to liner	Patch, cap or replace as necessary to repair damaged area and pass spark test
Basin fails leak test	Identify defective areas, plug leaks, and retest until passing
Concrete strength doesn't meet specification	Determine the level of deficiency and resulting structural concern and issues. Resolve, reinforce, or replace as needed to meet structural requirements.
Liner seam failure (sparks during spark testing)	Check weld, repair seam, or cap by patching or cap strip; retest and repeat until passing.

5.0 PROJECT MEETINGS

Project meetings will be scheduled to define and maintain responsibility and authority by promoting communication between various personnel responsible for designing, constructing, managing, and observing the construction. The Engineer's PM and Owner's PM will take primary responsibility for conducting the project meetings on a weekly basis. The purpose of the routine project meetings is to keep all parties informed and provide a forum for solving design, construction, and quality-related problems. Meeting minutes will be taken and distributed by the Owner and/or the Engineer.

5.1 Pre-Construction Meeting

A pre-construction meeting will be held to review the project and schedule and to clarify or resolve issues before construction begins. At a minimum, the meeting participants will include: the Owner's representative(s); the Engineer's PM and CQA Inspector, and the Contractor's PM and Superintendent and/or Foreman (who will also typically serve as the Contractor's Quality Manager). During this meeting the Engineer's PM will:

- Provide each party with relevant construction documents and supporting information. Supporting information may include construction drawings, specifications, and other pertinent documents. All parties should use the opportunity to distribute relevant documents.
- Review the General Conditions, Supplementary Conditions, and Division 1 General Requirements. Identify project site limits emphasizing coordination with other possible contractors, plus ongoing operation of the facility.
- Familiarize various parties with their specific responsibilities as outlined in the Contract Documents and this Plan relative to the construction drawings, schedules, and specifications. Discuss specific milestone dates, liquidated damages, etc.
- Discuss the purpose of this Plan and the documentation structure it provides as a means of verifying that the project will be constructed efficiently and within the specified design criteria and schedule.
- Review the responsibilities of each party.
- Review lines of authority and communication for each party.
- Discuss the established procedures and protocol for observations and testing, including sampling strategies.
- Discuss the established procedures and protocol for handling construction deficiencies, repairs, and re-sampling/re-testing.
- Discuss the established procedures and protocol for handling contract modifications (change orders and field orders).
- Review methods for documenting and reporting inspections and testing data.
- Review work area security and safety protocol.
- Discuss procedures for locating and protecting construction materials and preventing damage to the materials from inclement weather or other events.
- Conduct a site walk to review construction material and equipment staging/laydown and storage locations.

- Discuss Contractor's plans for site logistics including staging area location and preparation, site access, field office setup and utility plans, pre-construction survey, and onsite parking.
- Discuss payment for work in place including method of payment and unit cost work.

The Owner will document the pre-construction meeting and will distribute the meeting minutes to all parties.

5.2 Weekly Progress Meetings

Weekly progress meetings will be held at the site according to a schedule agreed to in the Pre-Construction Meeting. The Engineer's PM or the Owner's PM will lead the weekly project meetings with the Contractor at the construction site. The Engineer's PM will typically participate in the meetings by telephone conference call. The purpose of the progress meeting is to:

- Review the previous week's meeting notes, and activities and accomplishments that have occurred since.
- Review the Contractor's look ahead for the next three weeks.
- Identify potential delays and develop actions to monitor schedules.
- Determine whether offsite personnel should be onsite to observe specified testing.
- Discuss existing or potential construction or schedule problems and their solutions, including delivery of any long-lead items.
- Discuss Owner-supplied (furnished) items and coordination with the Contractor.
- Discuss status of contract modifications, submittals, etc.

The meeting facilitator will document the content of and actions resulting from the weekly progress meeting. Copies of the meeting minutes will be sent to all personnel attending the meeting and others as agreed upon.

5.3 Work Deficiency Meetings

Special meetings may be held if a problem or deficiency is present or likely to occur. At a minimum, such meeting will be attended by the Engineer's PM, the Owner's PM and Contractor's Superintendent and/or Foreman. If the problem is related to construction quality, the Engineer's CQA Inspector will also attend these meetings. The Contractor's PM and other representatives of the Owner may also choose to attend these meetings.

The purpose of these meetings will be to resolve problems or recurring work deficiencies by defining and discussing the problem or deficiency, reviewing alternative solutions, and implementing plans for resolution.

The meeting facilitator will document the content of, and actions resulting from, the work deficiency meeting. Copies of the meeting minutes will be sent to all personnel attending the meeting, and others as agreed upon.

5.4 Other Meetings

Several other meetings will take place during construction. These include, but are not limited to, coordination meetings, pre-installation meetings, and others as specified in the Contract Documents.

ATTACHMENT B

Geotechnical Findings and Recommendations Letter

WHITMAN COUNTY

Department of Public Works

PHONE: (509) 397-6206
Fax: (509) 397-6210
N. 310 Main
2nd Floor Public Services Building
Colfax, WA 99111

March 10, 2017

TO: **FILE No. XEW31**

RE: **REPORT**
Geotechnical Engineering Evaluation for the Contact Water and Fire Suppression Water Tanks Project
Solid Waste Facility – Carothers Road
Whitman County, Washington

The purpose of this evaluation is to assess the geotechnical engineering related conditions within the proposed construction area and provide opinions and recommendations with respect to project design and construction. The following steps were included in the scope:

- Reviewed previous geotechnical information for the site from the new Waste Transfer Facility project, and appurtenant structures/improvements.
- Reviewed the construction-related information for the new facilities at the site with respect to the geotechnical features.
- Reviewed historical information for the site with respect to the lined surface impoundment ("Lined Pond") improvements, made approximately 10 years ago.
- Participated in meetings with the design team regarding the proposed site improvements, including specialty information on the proposed storage tanks.
- Prepared this summary report of findings and recommendation relative to the proposed improvements.

Proposed Construction

Whitman County, in its desire to upgrade facilities at the Carothers Road Waste handling facility, wishes to install two underground contact water storage tanks to replace the existing Lined Pond. The new tanks will be installed at the same location as the existing surface impoundment and buried. Also as part of the improvements to the contact water system, two pump stations are proposed – one for the former waste transfer building drain and the other to lift contact water from the buried tanks to a proposed Lined Evaporation Basin or to a fill station to haul out the contact water to a local POTW.

The following generally describes the project as included in Great West's Engineering Design Basis Report:

- The Lined Pond, supporting appurtenances, fence, and decant structure will be removed/demolished by County forces as part of site preparation. The Contact Water

Tanks will be industrial-grade, double-walled (with secondary-containment and interstitial leak detection monitoring) fiberglass reinforced plastic (FRP) units with 10,000 gallons of capacity each. Each tank will be equipped with a 24-inch diameter manway riser for inspection, maintenance, and repairs; a vent pipe; down-tubes for the level sensor and leak detection probes; inlet lines; and an outlet drain pipe that is connected together via a manifold and valves that gravity drains to a new lift station. Monitoring instrumentation and controls will be located on an electrical rack adjacent to the proposed pump station. An underdrain (groundwater collection) system will be located at the subgrade level of the tanks to intercept localized, perched groundwater and drain it to the nearby stormwater ditch. As a conservative measure, the tanks will be ballasted to resist buoyant forces by using the tank manufacturer's anchor strap and precast deadman system. The tanks will be buried a minimum of 32 inches for frost protection. Vehicle loading will not be allowed over the tanks and will be protected by bollards placed around the outside perimeter at finish grade.

- The Fire Suppression Water Tank will be a single 15,000-gallon fiberglass reinforced plastic tank, situated near the existing water well. The location of the proposed water tank is predicted to be underlain by uncontrolled (not engineered or compacted) fill materials. Most of the materials are likely suitable for re-use in placement of compacted structural fills. As with the contact water tanks, the tank will be buried a minimum of 32 inches to protect against frost action. Vehicle loading will not be allowed over the tank and will be protected by bollards placed around the outside perimeter at finish grade. It is proposed that the tank will be anchored with a "deadman" ballast system.

Subsurface Conditions

The subsurface conditions at the Solid Waste Facility consist of a mixture of native soils, uncontrolled fill materials (consisting of materials similar to the native materials), and compacted fill materials. The Lined Pond currently occupies the location of the proposed contact water tanks and the evaporation basin. The pond was constructed on compacted fill. There are no records from the original pond construction, but it is believed that it was constructed approximately 25 years ago. As a result, there are no records regarding the level of compaction, or the details of site preparation.

The area of the proposed Fire Suppression Water Tank, next to the existing water well, is likely underlain by uncontrolled fill. It is presumed that the fill has been in place for at least 20 years, and that the fill is similar in character and material types as the fill that was encountered in the area of the nearby new Waste Transfer Building. A geotechnical investigation was completed for planning and construction of the new Waste Transfer Building and appurtenant improvements. The study was conducted by Strata, Inc, of Pullman, WA, and documented in a report dated August 29, 2012. The exploration and engineering recommendations from that study, in conjunction with observations and known site history, formed much of the basis for the conclusions and recommendation contained herein.

Opinions

The location for the proposed Contact Water Tanks and Lined Concrete Evaporation Basin are underlain by controlled and compacted fill. The location for the proposed Fire Suppression Water Tank is underlain by uncontrolled and uncompacted fill. The materials, if prepared in accordance with this report, are considered suitable for support of the proposed improvements.

The materials in the vicinity of the existing pond (proposed Contact Water Tanks and Lined Concrete Evaporation Basin) are thought to consist predominantly of local, native materials from the property, placed as fill, and consisting of clay and silty clay. These materials are considered suitable for support of the proposed improvements. The existing pond materials need to be removed, and the subgrade verified to be suitable for support of the proposed improvements. The resulting surface shall be prepared in accordance with the recommendations below, which include the construction of engineered, controlled fill to support the improvements.

The materials in the vicinity of the proposed Fire Suppression Water Tank consist of uncontrolled fill. The thickness of the uncontrolled fill is not precisely known. The uncontrolled fill shall be removed down to suitable support material, and replaced with controlled and compacted structural fill to the subgrade level for the proposed tank. Some deleterious materials (such as chunks of concrete, asphalt, and organic rich topsoil) may exist within the uncontrolled fill during excavation. These materials are not suitable for re-use as compacted fill.

Site Preparation

The site of the proposed Contact Water Tanks and Lined Concrete Evaporation Basin is thought to be underlain by compacted fill material. The level of compaction is unknown. The site shall be stripped to at least two feet below the design grade for support of the tanks, pump stations, and the evaporation basin. The resulting surface must be reviewed by the Geotechnical Engineer ("Whitman County Engineer") to determine if additional excavation is required to provide suitable support for the intended improvements. If additional excavation is required, then the material must be removed to the satisfaction of the Geotechnical Engineer, then replaced with compacted general backfill. If additional excavation is not required, then the resulting surface must be compacted as a structural fill, prior to placing shot rock or crushed surfacing materials. The site of the proposed Fire Suppression Water Tank is underlain by uncontrolled fill. The uncontrolled fill must be removed down to suitable material, to the satisfaction of the Geotechnical Engineer. At this point, it is assumed that a minimum of 24 inches shall be sub-excavated below the tank. The resulting surface must be suitable to support the structural fill section that supports the tank and other improvements. Once the material is excavated to a suitable material, the subgrade can be established by placing controlled and compacted structural fill.

The anticipated excavations in the native and fill soils can be accomplished with conventional soil excavation equipment such as backhoes, trackhoes and bulldozers. The majority of the material excavated from the areas is suitable for re-use as general backfill. Excavated material that exhibits excessive moisture, organics, or other deleterious material (such as concrete and asphalt chunks) is not suitable for re-use.

Subgrade Preparation

Any created surface that is to receive fill over it, including roads and yard areas, must be compacted to structural fill requirements, at least 95% of the maximum density, as determined by ASTM D-1557, Modified Proctor.

All materials to receive structural fill, or to be used as structural fill, must be approved by the Geotechnical Engineer prior to use. The subgrade materials must be moisture conditioned to within 3% on the "dry" side of optimum moisture (as determined by ASTM D-1557), or within 2% on the "wet" side of optimum. All subgrades must be tested by the construction contractor, and either approved or rejected, by the Owner's representative prior to receiving fill materials or placement of structures.

For the areas under the buried tanks, the prepared subgrade shall consist of 12 inches of proof-rolled native material (as approved by the Geotechnical Engineer). This material shall be overlain by a minimum of 18 inches of compacted shot rock, in turn, overlain by a minimum of 6 inches of compacted Crushed Surfacing Top Course (CSTC), compacted to at least 95% relative compaction in accordance with ASTM D-1557.

The subgrade for the Lined Concrete Evaporative Basin shall consist of at least 8 inches of shot rock overlain by at least 4 inches of the Crushed Surfacing Top Course. Subgrade for the lift stations must be approved by the Geotechnical Engineer, and shall have at least 12 inches of compacted Crushed Surfacing Top Course (CSTC).

Compacted General Backfill

Fill materials placed at the site under or within 5 feet of the site improvements, or used for trench backfill, shall be placed as structural fill. Native soils excavated from the site (excluding topsoil) are suitable for re-use as structural fill and backfill. Imported general fill or backfill, shall consist of material designated as GW, GP, GM, SW, SP or SM according to the Unified Soil Classification System.

Structural Fill Requirements

Fill materials placed under or within 5 feet of the site improvements, or used for trench backfill, shall be placed as structural fill. Native soils excavated from the site (excluding topsoil) are suitable for re-use as general fill and backfill. Imported fill, that will be used for structural support, shall consist of structural fill material designated as crushed aggregate, such as ¾-inch or 5/8-inch minus crushed surfacing. Requirements for structural fill shall be in accordance with the project design documents.

Any fill placed as a structural fill (to support site improvements) must be compacted as structural fill, to at least 95% of ASTM D-1557, Modified Proctor. All materials to either receive structural fill, or to be used as structural fill, must be approved by the Geotechnical Engineer prior to use. All structural fills must be moisture conditioned to within 3% on the "dry" side of optimum moisture (as determined by ASTM D-1557), or within 2% on the "wet" side of optimum. All fill placement will be tested, and either approved or rejected, by the owner's representative. All pipe bedding materials must consist of rounded or sub-rounded granular aggregate, specifically intended for that purpose.

All fills and backfills, supporting or in direct proximity to the tanks, must be constructed in accordance with the tank manufacturer's requirements. This is to include, but not limited to, any specialty backfill material, including compaction levels, setbacks, and temporary slopes. All temporary slopes shall be sloped for stability, at a minimum of 1:1 horizontal to vertical. Temporary slopes shall be no closer than 2 feet from the base of the tank. Backfill materials, placed around the tanks, shall be free draining to eliminate the possibility of hydrostatic pressure buildup. This can be satisfied with the manufacturer's recommended backfill material described as being "flowable and self-compacting". This type of material is commonly a "pea-sized" sand or gravel material.

Soil Properties

Soil friction values, for design of foundations and earth structures, can be computed using the following:

Soil to soil: Phi min = 30 degrees
Soil to crushed rock: Phi min = 30 degrees
Crushed rock to rock: Phi min = 45 degrees

Cast in place Concrete

Cast-in-place concrete elements and portland cement concrete pavements and slabs should be designed for their intended use. Structural concrete shall have a minimum compressive strength of 4,000 psi and general site utility pads shall have a minimum strength of 3,000 psi. Exposed concrete surfaces shall contain at least 4.5 to 7 percent entrained air content. All concrete improvements must be underlain by compacted structural fill, consisting of at least 8 inches of Crushed 5/8 -inch minus CSTC, compacted to at least 95% of the maximum as determined by ASTM D-1557, Modified Proctor. The crushed surfacing must be underlain by compacted fill material consisting of native soil or imported structural fill.

The project will consist of multiple improvements including buried tanks, pump stations, a surficial evaporative basin and other related improvements. At the completion of the project, many of the areas not blocked by bollards in proximity to the improvements will be accessible to vehicular traffic. These areas shall be surfaced with at least 8 inches of CSTC, underlain by a non-woven separation geotextile (such as 6-ounce non-woven GXT). All geotechnical questions shall be directed to the Geotechnical Engineer or his authorized representative.

Respectfully Submitted,
Whitman County Public Works

W. Mark Storey, PE
Whitman County Engineer

W. MARK STOREY
STATE OF WASHINGTON
0028400
REGISTERED
PROFESSIONAL ENGINEER
3/10/17
EXPIRES 9-22-18