CAROTHERS ROAD SOLID WASTE FACILITY

CONTACT WATER AND FIRE SUPPRESSION WATER HOLDING TANKS PROJECT

WHITMAN COUNTY, WASHINGTON

BID NO. XEW31

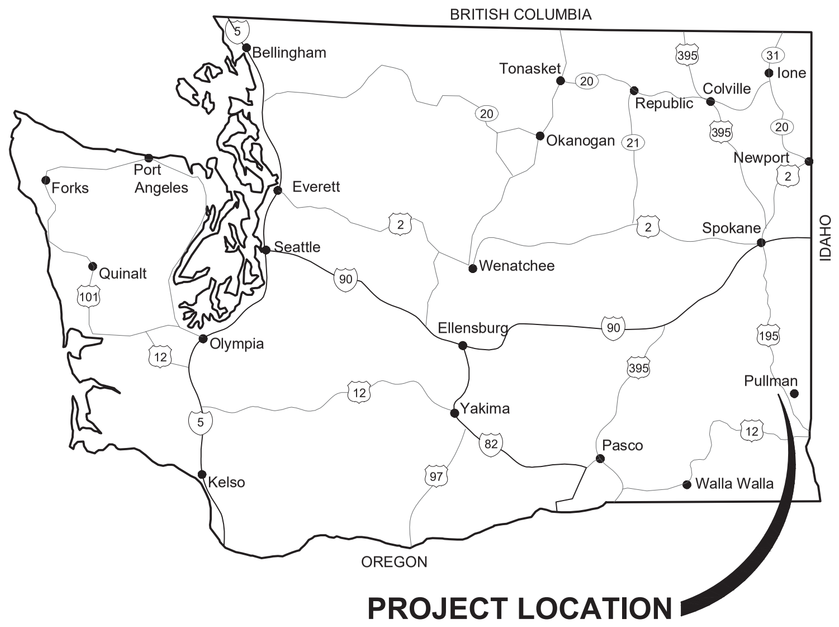

SECTION 28, TOWNSHIP 15 N., AND RANGE 44 E.

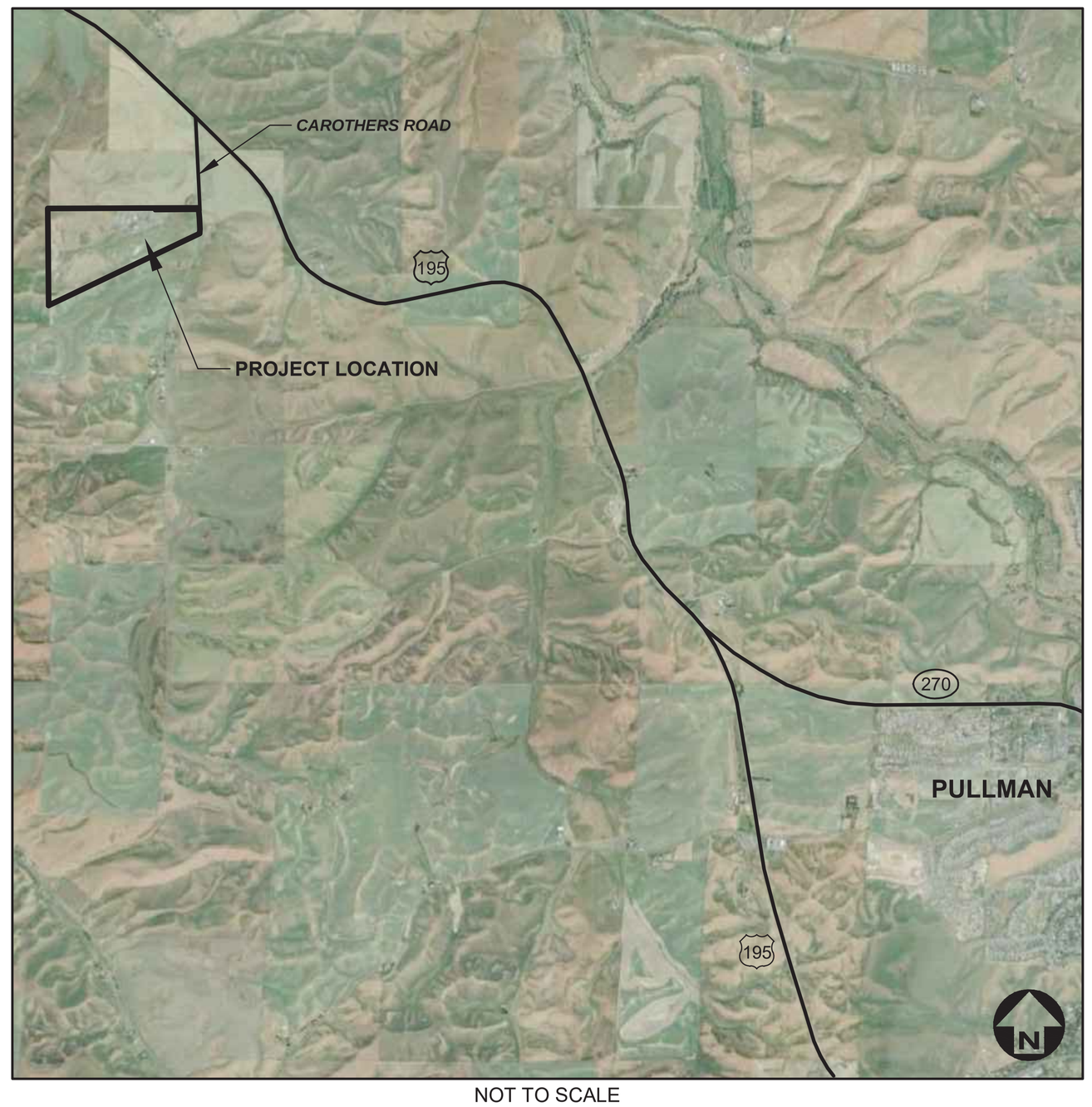

NOT TO SCALE

SHEET INDEX

PROJECT: 4-16108

DATE: MARCH 2017

SHEET 1	COVER
SHEET 2	LEGEND, ABBREVIATIONS AND GENERAL NOTES
SHEET 3	EXISTING SITE CONDITIONS
SHEET 4	DEMOLITION PLAN
SHEET 5	CONTACT WATER TANKS AND EVAPORATION BASIN ENLARGED SITE PLAN
SHEET 6	CONTACT WATER TANKS AND EVAPORATION BASIN SECTION
SHEET 7	FIRE SUPRESSION WATER HOLDING TANK ENLARGED SITE PLAN
SHEET 8	FIRE SUPRESSION WATER HOLDING TANK SECTION
SHEET 9	FINISH GRADING AND DRAINAGE PLAN
SHEET 10	GENERAL DETAILS
SHEET 11	CONTACT WATER LIFT STATION DETAILS
SHEET 12	CONTACT WATER TANK DETAILS
SHEET 13	CONTACT WATER TANK DETAILS
SHEET 14	FIRE SUPRESSION WATER HOLDING TANK DETAILS
SHEET 15	FIRE SUPRESSION WATER HOLDING TANK DETAILS
SHEET 16	BUILDING DRAIN LIFT STATION DETAILS
SHEET 17	EVAPORATION BASIN STRUCTURAL DETAILS
SHEET 18	EVAPORATION BASIN STRUCTURAL DETAILS

PLANS PREPARED FOR:

MARK STOREY, P.E.
COUNTY ENGINEER & PUBLIC WORKS DIRECTOR
WHITMAN COUNTY, WASHINGTON

DAVID NAILS
SOLID WASTE & RECYCLING DIRECTOR
WHITMAN COUNTY, WASHINGTON

APPROVED BY:

TRAVIS A. PYLE, P.E.
GREAT WEST ENGINEERING

TRAVIS A. PYLE
STATE OF WASHINGTON
38820
REGISTERED
PROFESSIONAL ENGINEER

QA/QC BY:

ROBERT E. CHURCH, P.E.
GREAT WEST ENGINEERING

PLANS PREPARED BY:

MICHELLE LANGDON, P.E.
BRET ANDERSON

GreatWest engineering®
3363 N. LAKEHARBOR LANE
BOISE, ID 83703
(208)576-6646

NO.	REVISION DESCRIPTION	BY	DATE

SET NO.

SHEET NO.

1

F:\4-16108-Whitmon Co Contact Water Tank Project\CADD 4-16108\Sheets\4-16108-01-Cover.dwg

ABBREVIATIONS

@	AT
Δ	ANGLE OF DEFLECTION, DELTA ANGLE
<PT	ANGLE POINT
AB	ANCHOR BOLT
ABDN	ABANDON
AC	ASBESTOS CONCRETE
ADDN	ADDITIONAL
ADJ	ADJACENT
AFF	ABOVE FINISHED FLOOR
ALT	ALTERNATE
ANSI	AMERICAN NATIONAL STANDARDS INSTITUTE
APPROX	APPROXIMATE
APVD	APPROVED
ARCH	ARCHITECTURE, ARCHITECTURAL
ASPH	ASPHALT
AVE	AVENUE
AVG	AVERAGE
BFV	BUTTERFLY VALVE
BLDG	BUILDING
BLK	BLOCK
BLVD	BOULEVARD
BM	BEAM, BENCHMARK
BOT	BOTTOM
BRG	BEARING
BRKT	BRACKET
BVC	BEGIN VERTICAL CURVE
C-C	CENTER TO CENTER
CHAN	CHANNEL
CHK	CHECK
CI	CAST IRON
CIPC	CAST-IN-PLACE CONCRETE
CIRC	CIRCULAR
CJ	CONSTRUCTION JOINT, CONTROL JOINT
℄	CENTER LINE
CLR	CLEAR, CLEARANCE
CMP	CORRUGATED METAL PIPE
CMU	CONCRETE MASONRY UNITS
CO	CLEANOUT
COL	COLUMN
CONC	CONCRETE
CONSTR	CONSTRUCTION
CONT	CONTINUE, CONTINUED, CONTINUOUS
CONTR	CONTRACTOR
COORD	COORDINATE
CP	CONTROL PANEL, CONTROL POINT
CPLG	COUPLING
CTR	CENTER
CTV	CABLE TELEVISION
CU	CUBIC, COPPER
CF	CUBIC FEET
CULV	CULVERT
CY	CUBIC YARD
DET	DETAIL
DI	DUCTILE IRON, DRAIN INLET
DIA, ø	DIAMETER
DIAG	DIAGONAL
DIM	DIMENSION
DR	DRIVE
DWG	DRAWING
E	EAST
EA	EACH
EL, ELEV	ELEVATION
ELB	ELBOW
ELEC	ELECTRIC, ELECTRICAL
ENCL	ENCLOSE
ENGR	ENGINEER
EOP	EDGE OF PAVEMENT
EQ	EQUAL, EQUALLY
EQ SP	EQUALLY SPACED
EQUIP	EQUIPMENT
EQUIV	EQUIVALENT
EVC	END VERTICAL CURVE
EW	EACH WAY
EXC	EXCAVATE
EXP	EXPANSION
EXP JT	EXPANSION JOINT
EXST	EXISTING
FCV	FLOW CONTROL VALVE
FD	FLOOR DRAIN
FDN	FOUNDATION
FES	FLARED END SECTION
FET	FLARED END TERMINAL
FF	FINISHED FLOOR
FG	FINISH GRADE
FHYD	FIRE HYDRANT
FJ	FLANGE JOINT
FL	FLOW LINE
FLEX	FLEXIBLE
FM	FORCEMAIN
FT	FOOT, FEET
FO	FIBER OPTIC
FTG	FOOTING, FITTING
G	NATURAL GAS
GA	GAGE, GAUGE
GAL	GALLON
GALV	GALVANIZED
GND	GROUND
GVL	GRAVEL
HB	HOSE BIB
HDPE	HIGH DENSITY POLYETHYLENE
HOR, HORIZ	HORIZONTAL
HWY	HIGHWAY
HYD	HYDRANT
ID	INSIDE DIAMETER
IE	INVERT ELEVATION
IN	INCH
INV	INVERT
JB	JUNCTION BOX
JT	JOINT
K	RATE OF VERTICAL CURVATURE
LBS	POUNDS
LF	LINEAR FEET
LN	LANE
LPG	LIQUID PROPANE GAS
LT	LEFT
MAX	MAXIMUM
MD	MEASURE DOWN
MFD	MANUFACTURED
MFR	MANUFACTURE, MANUFACTURER
MH	MANHOLE
MIN	MINIMUM
MISC	MISCELLANEOUS
MJ	MECHANICAL JOINT
MOV	MOTOR OPERATED VALVE
MPWSS	MONTANA PUBLIC WORKS STANDARD SPECIFICATIONS
N	NORTH
NE	NORTHEAST
NG	NATURAL GAS
NIC	NOT IN CONTRACT
NO	NUMBER
NOM	NOMINAL
NTS	NOT TO SCALE
NW	NORTHWEST
OC	ON CENTER
OD	OUTSIDE DIAMETER
OF	OVERFLOW
OH	OVERHEAD
OHP	OVERHEAD POWER
OHT	OVERHEAD TELEPHONE
OPNG	OPENING
PC	POINT OF CURVATURE
PCC	POINT OF COMPOUND CURVATURE
PE	PLAIN END, POLYETHYLENE
PERP	PERPENDICULAR
PI	POINT OF INTERSECTION
PL	PROPERTY LINE
PNL	PANEL
PRC	POINT OF REVERSE CURVATURE
PREFAB	PREFABRICATED
PRELIM	PRELIMINARY
PREP	PREPARE, PREPARATION
PROP	PROPERTY
PRV	PRESSURE REDUCING VALVE
PSF	POUNDS PER SQUARE FOOT
PSI	POUNDS PER SQUARE INCH
PT	POINT, POINT OF TANGENCY
PVC	POLYVINYL CHLORIDE
PVI	POINT OF VERTICAL INTERSECTION
PVMT	PAVEMENT
R, RAD	RADIUS
RC	REINFORCED CONCRETE
RCP	REINFORCED CONCRETE PIPE
RD	ROAD
RDCR	REDUCER
REBAR	REINFORCEMENT BAR
REF	REFERENCE
REINF	REINFORCE
REQD	REQUIRED
RR	RAILROAD
RST	REINFORCING STEEL
RT	RIGHT
R/W	RIGHT-OF-WAY
S	SOUTH, SANITARY SEWER
SAN	SANITARY
SCH	SCHEDULE
SD	STORM DRAIN
SDWK	SIDEWALK
SE	SOUTHEAST
SECT	SECTION
SF	SQUARE FOOT
SHT	SHEET
SIM	SIMILAR
SLP	SLOPE
SPEC	SPECIFICATION
SQ	SQUARE
SSTL	STAINLESS STEEL
STA	STATION
SS	SANITARY SEWER SERVICE
STD	STANDARD
ST	STREET
STL	STEEL
STRUCT	STRUCTURE
SW	SOUTHWEST
SYM	SYMMETRICAL
TB	THRUST BLOCK
TBC	TOP BACK OF CURB
TBM	TEMPORARY BENCH MARK
TEL	TELEPHONE
TEMP	TEMPORARY
THRU	THROUGH
TYP	TYPICAL
UG	UNDERGROUND
UGP	UNDERGROUND POWER
UGT	UNDERGROUND TELEPHONE
UTIL	UTILITY
V	VALVE, VOLT
VB	VALVE BOX
VERT	VERTICAL
VOL	VOLUME
W	WEST, WATER
WTR	WATER
WD	WOOD
W/	WITH
W/O	WITHOUT
WL	WETLAND
WM	WIRE MESH, WATER METER
WS	WATERSTOP, WATER SURFACE, WATER SERVICE
WT	WEIGHT
WV	WATER VALVE
WWF	WELDED WIRE FABRIC
WWM	WELDED WIRE MESH
XFMR	TRANSFORMER
X-ING	CROSSING
XS	CROSS SECTION
YD	YARD

LEGEND

EXISTING	PROPOSED	DESCRIPTION
		MAJOR CONTOUR
		MINOR CONTOUR
OHT	OHT	OVERHEAD TELEPHONE
UGT	UGT	UNDERGROUND TELEPHONE
CTV	CTV	CABLE TELEVISION
FO	FO	FIBER OPTIC
G	G	NATURAL GAS
OHP	OHP	OVERHEAD POWER
UGP	UGP	UNDERGROUND POWER
S	S	SANITARY SEWER
SS SS SS	SS SS SS	SANITARY SEWER SERVICE
FM	FM	SANITARY SEWER FORCEMAIN
SD	SD	STORM DRAIN
		STORM CULVERT
W	W	WATER
WS WS WS	WS WS WS	WATER SERVICE
CW	CW	CONTACT WATER
UD	UD	UNDERDRAIN
		CHAINLINK FENCE
X X X	X X X	BARBED WIRE FENCE
		WOOD FENCE
		PAVED ROAD
		GRAVEL ROAD
		PROPERTY/LOT LINE
		PROPERTY EASEMENT
		CITY LIMIT/DISTRICT BOUNDARY
		RAILROAD
		DITCH
		WATER EDGE
WL		WETLAND
		BUILDING
		BENCHMARK
		CONTROL POINT
		PROPERTY PIN
		BORING
		MONITORING WELL
		TEST PIT
		BOLLARD
		MAIL BOX
		SIGN

EXISTING	PROPOSED	DESCRIPTION
		STUMP
		SHRUB/BUSH
		TREE-CONIFER
		TREE-DECIDUOUS
		TREE LINE
		COMMUNICATION MANHOLE
		COMMUNICATION VAULT
		TELEPHONE RISER
		CABLE TV RISER
		NATURAL GAS METER
		NATURAL GAS RISER
		NATURAL GAS VALVE
		LIGHT POLE
		STREET LIGHT POLE
		POWER RISER
		PAD MOUNTED TRANSFORMER
		POWER VAULT
		UTILITY POLE
		GUY WIRE
		SANITARY MANHOLE
		SANITARY CLEANOUT
		SANITARY LAMPHOLE
		STORM MANHOLE
		STORM ROUND INLET
		STORM SQUARE INLET
		STORM CATCH BASIN
		11.25° ELBOW
		22.50° ELBOW
		45° ELBOW
		90° ELBOW
		TEE
		CROSS
		CAP
		FIRE HYDRANT
		GATE VALVE
		REDUCER
		WATER METER
		WELL
		CURB STOP
		FROST FREE HYDRANT

GENERAL NOTES:

1. THIS IS A STANDARD LEGEND AND ABBREVIATION LIST. THEREFORE, NOT ALL SYMBOLS AND ABBREVIATIONS MAY BE USED ON THIS PROJECT.
2. EXISTING UNDERGROUND UTILITIES SHOWN ARE FROM THE BEST INFORMATION AVAILABLE. THIS INFORMATION IS APPROXIMATE AND MAY BE INCOMPLETE. FOR ACCURATE LOCATION, THE CONTRACTOR SHALL CONTACT, PRIOR TO EXCAVATION, THE UTILITIES UNDERGROUND LOCATION CENTER AT: 811.

PROJECT NOTES:

1. SOURCE TOPOGRAPHY SHOWN IS BASED ON SURVEY INFORMATION AND MAPPING PROVIDED BY WHITMAN COUNTY AND AS-BUILT INFORMATION FROM THE NEW WASTE TRANSFER BUILDING (WTB) PROJECT. EXISTING CONDITIONS MAY VARY FROM THOSE SHOWN. THE CONTRACTOR SHALL VERIFY EXISTING CONDITIONS AND ADJUST WORK PLAN ACCORDINGLY PRIOR TO BEGINNING CONSTRUCTION.
2. HORIZONTAL DATUM: SITE SPECIFIC SET AT CP#1.
3. VERTICAL DATUM: NAVD 88.

GENERAL DESIGN DESIGNATIONS:

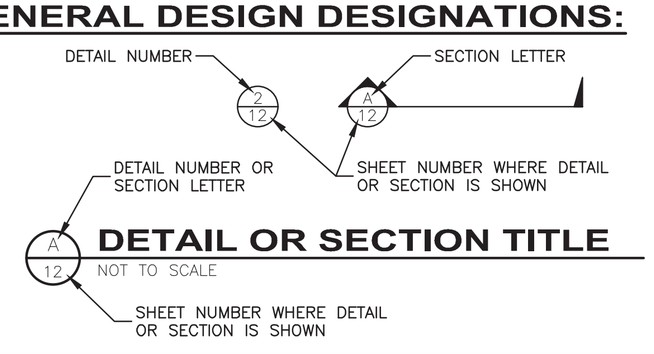

NO.	REVISION DESCRIPTION	BY	DATE

PROJECT: 4-16108
DESIGNED: ML / TAP
DRAWN: ML / BAA
CHECKED: REC
APPROVED: TAP
DATE: MARCH 2017

GreatWest engineering®
3368 N. LAKEHARBOR LANE
BOISE, ID 83703
(208)676-6646

CAROTHERS ROAD SOLID WASTE FACILITY
CONTACT WATER AND FIRE SUPPRESSION WATER HOLDING TANKS PROJECT

LEGEND, ABBREVIATIONS AND GENERAL NOTES

SHEET NO.
2
OF 18

F:\4-16108-Whitman Co Contact Water Tank Project\CADD 4-16108\Sheets\4-16108-02-General.dwg

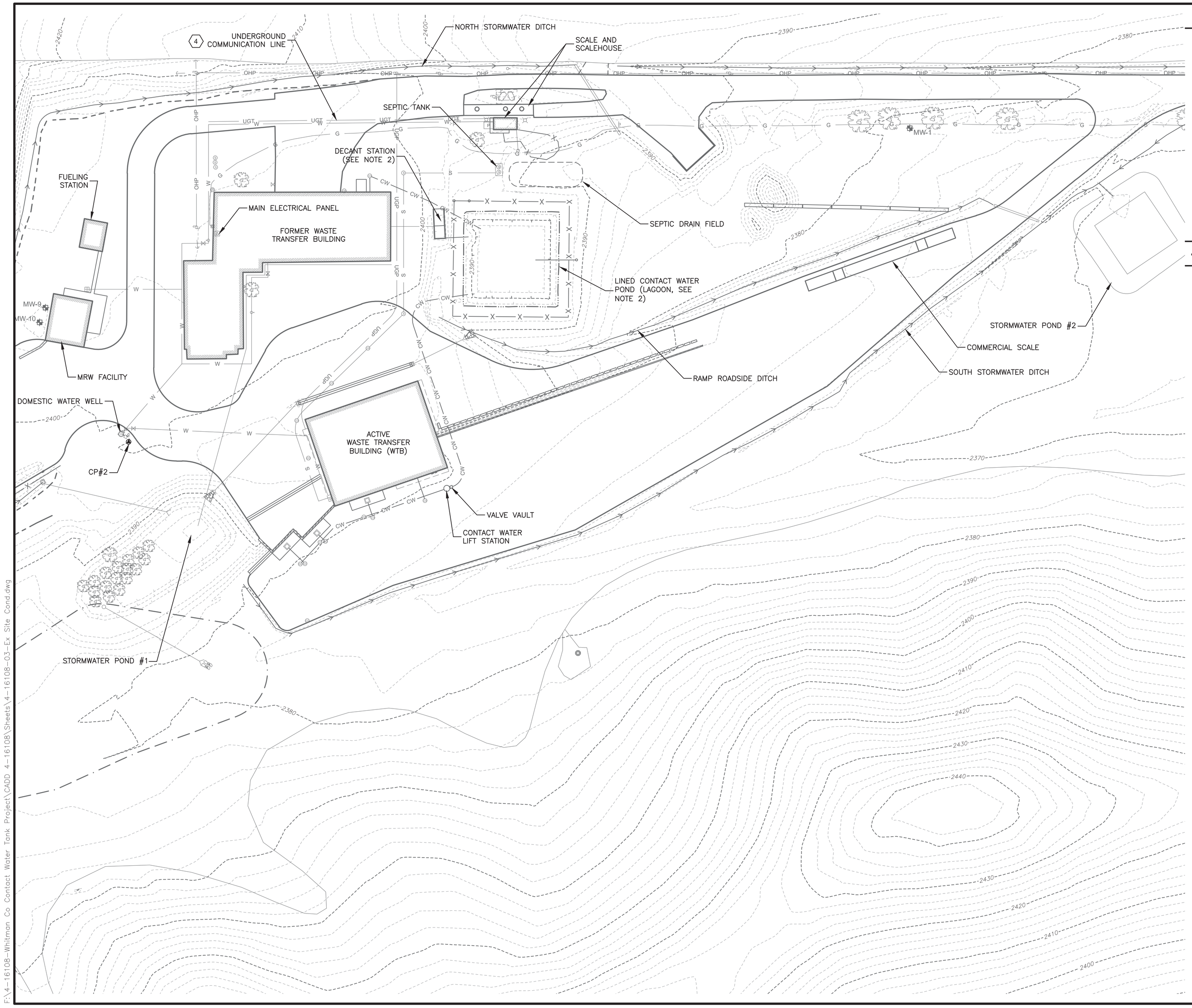

SHEET NOTES

1. SEE SHEET 2 FOR GENERAL PROJECT NOTES.
2. COORDINATE WITH OWNER FOR TURNOVER OF PROJECT AFTER OWNER'S COMPLETION OF SITE PREPARATION AND EARLY EARTHWORK ACTIVITIES.. ALSO COORDINATE WITH OWNER'S SITE ELECTRICIAN TO PROVIDE ELECTRICAL SUPPLY AND CONNECTIONS.

KEYED NOTES

1. A BURIED COMMUNICATION LINE RUNS PARALLEL TO THE WATER LINE. THE EXACT LOCATION OF THE LINE IS UNKNOWN. COORDINATE WORK AROUND THIS LINE WITH OWNER.

PROJECT CONTROL POINTS

ID	NORTHING	EASTING	ELEVATION
CP#1	10,000.00	10,000.00	2,418.94
CP#2	10,444.85	11,573.51	2,399.90

NORTH

0 50 100
SCALE IN FEET

NO.	REVISION DESCRIPTION	BY	DATE

PROJECT: 4-16108
DESIGNED: MIL / TAP
DRAWN: MIL / BAA
CHECKED: REC
APPROVED: TAP
DATE: MARCH 2017

STATE OF WASHINGTON REGISTERED PROFESSIONAL ENGINEER REGINALD STEVENS A. PILE

GreatWest engineering®
3368 N. LAKEHARBOR LANE
BOISE, ID 83703
(208)676-6646

CAROTHERS ROAD SOLID WASTE FACILITY
CONTACT WATER AND FIRE SUPPRESSION WATER HOLDING TANKS PROJECT

EXISTING SITE CONDITIONS

SHEET NO.
3
OF 18

F:\4-16108-Whitman Co Contact Water Tank Project\CADD 4-16108\Sheets\4-16108-03-Ex Site Cond.dwg

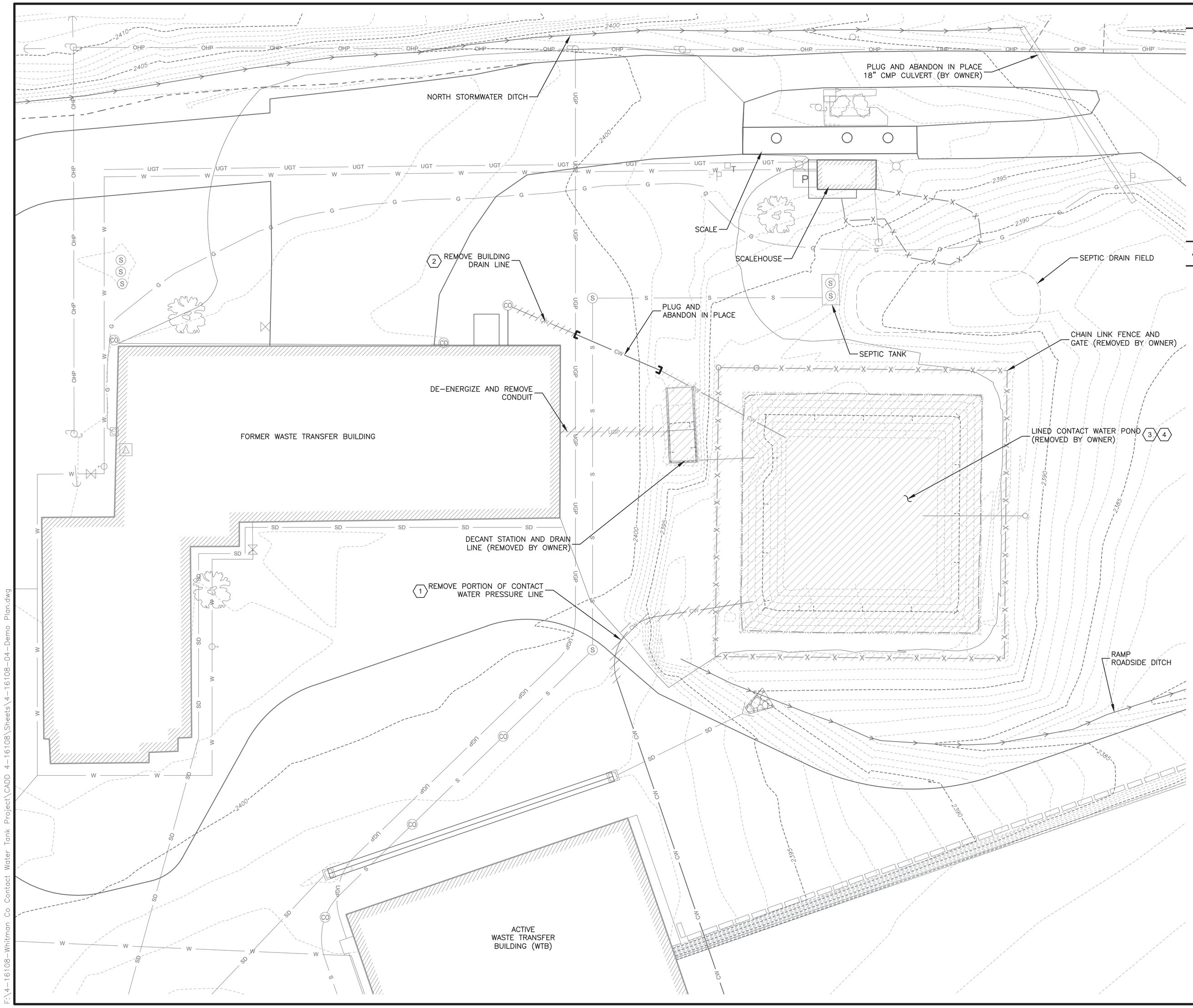

SHEET NOTES

1. SEE SHEET 2 FOR GENERAL PROJECT NOTES.

KEYED NOTES

1. REMOVE PORTION OF EXISTING CONTACT WATER PRESSURE LINE AND REINSTALL AND EXTEND AS SHOWN ON SHEET 5. IN-FILL AND RE-GRADE AS SHOWN ON SHEET 9 AFTER NEW PIPE INSTALLATION.
2. REMOVE EXISTING BUILDING DRAIN LINE AND REPLACE WITH LIFT STATION AND PIPE AS SHOWN ON SHEET 5. IN-FILL AND RE-GRADE AS SHOWN ON SHEET 9 AFTER NEW PIPE INSTALLATION.
3. PROVIDE 500 GALLON TEMPORARY TANK FOR STORAGE OF CONTACT WATER UNTIL NEW SYSTEM IS IN-PLACE AND OPERATIONAL AS APPROVED BY ENGINEER. COORDINATE WITH OWNER FOR LOCATION. CONTRACTOR SHALL HAUL OFF CONTACT WATER FOR PROPER DISPOSAL AND MANAGE TANK THROUGH PROJECT DURATION.
4. OWNER TO PREPARE SUBGRADE IN AREA OF CONTACT WATER TANKS AND INSTALL UNDERDRAIN LINE AS SHOWN ON SHEET 5.

NO.	REVISION DESCRIPTION	BY	DATE

PROJECT: 4-16108
DESIGNED: ML / TAP
DRAWN: ML / BAA
CHECKED: REC
APPROVED: TAP
DATE: MARCH 2017

GreatWest engineering®
3363 N. LAKEHARBOR LANE
BOISE, ID 83703
(208)676-6646

CAROTHERS ROAD SOLID WASTE FACILITY
CONTACT WATER AND FIRE SUPPRESSION WATER HOLDING TANKS PROJECT

DEMOLITION PLAN

SHEET NO.
4
OF 18

F:\4-16108-Whitman Co Contact Water Tank Project\CADD 4-16108\Sheets\4-16108-04-Demo Plan.dwg

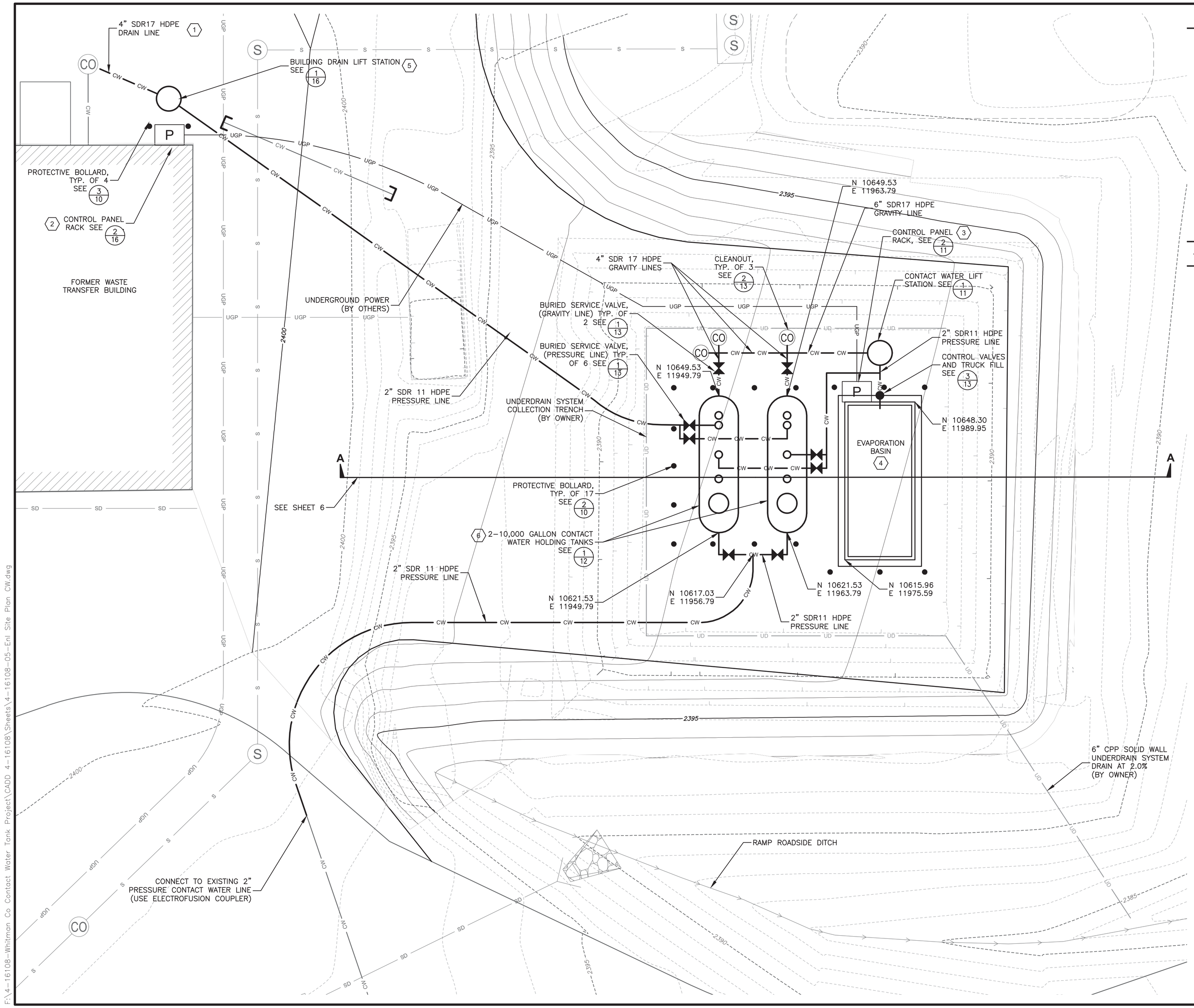

SHEET NOTES

1. SEE SHEET 2 FOR GENERAL PROJECT NOTES.
2. SEE SHEET 9 FOR FINISH GRADES.

KEYED NOTES

1. EXPOSE EXISTING CLEAN OUT AND INSTALL 4" LINE TO DRAIN TO NEW LIFT STATION. COORDINATE WITH ENGINEER.
2. MOUNT PUMP AND I & C CONTROL PANELS ON BUILDING NEXT TO ELECTRIC L CONTROLS. COORDINATE WITH OWNERS ELECTRICIAN FOR POWER AND MOUNTING OF ASSOCIATED ELECTRICAL PANELS.
3. MOUNT CONTROLS ON ELECTRICAL RACK AS SUPPLIED BY OWNERS ELECTRICIAN.
4. SEE STRUCTURAL PLAN SHEETS FOR EVAPORATION BASIN DETAILS.
5. SET NEW LIFT STATION AS CLOSE TO BUILDING AS PRACTICALLY POSSIBLE AS TO NOT DAMAGE THE BUILDING OR UNDERMINE THE FOUNDATION.
6. COORDINATE TANK PIPE AND VENT CONNECTIONS WITH TANK SUPPLIER AND ADJUST PIPE ALIGNMENTS ACCORDINGLY.

NO.	REVISION DESCRIPTION	BY	DATE

PROJECT: 4-16108
DESIGNED: MIL / TAP
DRAWN: MIL / BAA
CHECKED: REC
APPROVED: TAP
DATE: MARCH 2017

GreatWest engineering®
3383 N. LAKEHARBOR LANE
BOISE, ID 83703
(208)676-6646

CAROTHERS ROAD SOLID WASTE FACILITY
CONTACT WATER AND FIRE SUPPRESSION WATER HOLDING TANKS PROJECT
CONTACT WATER TANKS AND EVAPORATION BASIN ENLARGED SITE PLAN

SHEET NO.
5
OF 18

F:\4-16108-Whitman Co Contact Water Tank Project\CADD 4-16108\Sheets\4-16108-05-Enl Site Plan CW.dwg

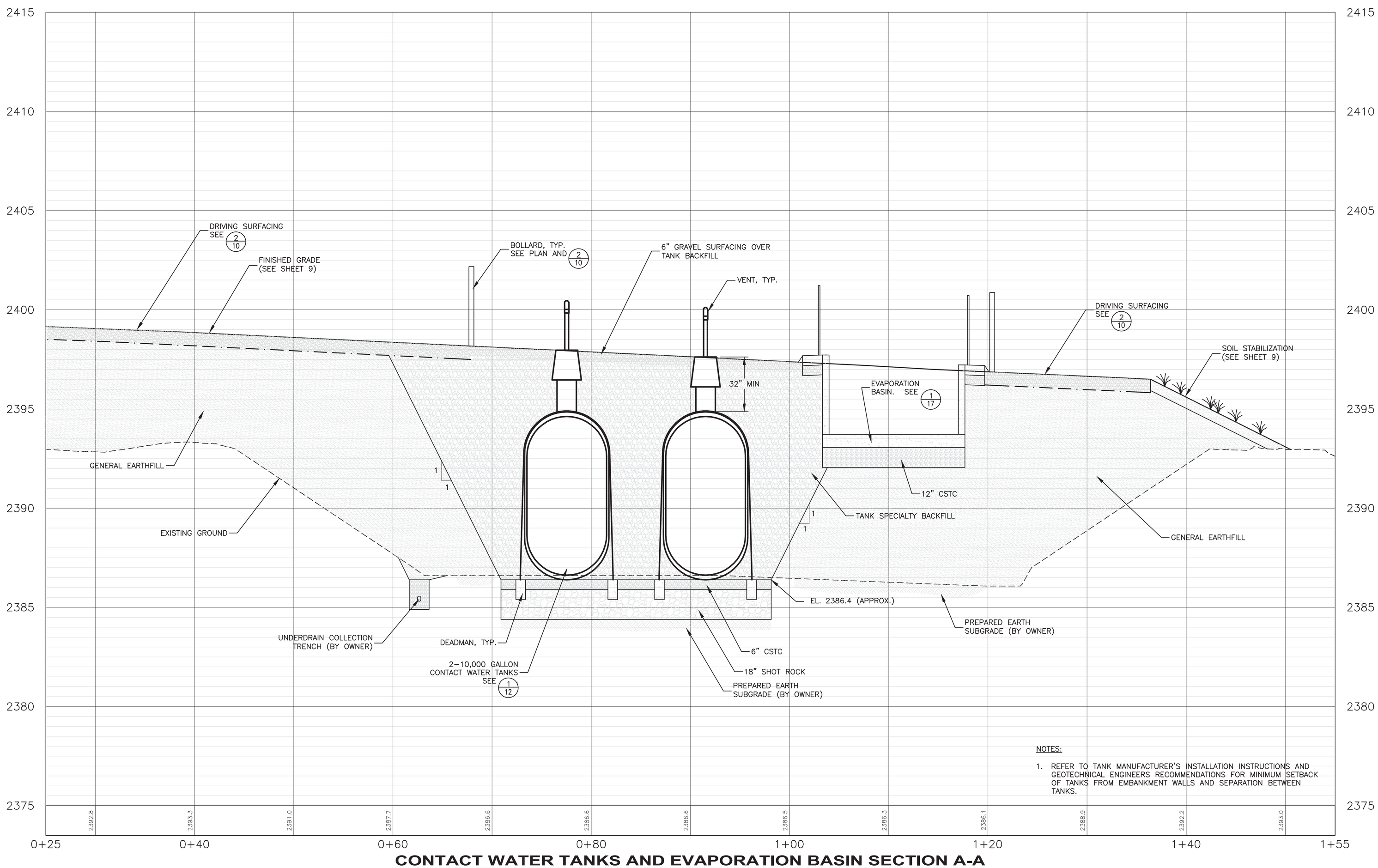

NOTES:

1. REFER TO TANK MANUFACTURER'S INSTALLATION INSTRUCTIONS AND GEOTECHNICAL ENGINEERS RECOMMENDATIONS FOR MINIMUM SETBACK OF TANKS FROM EMBANKMENT WALLS AND SEPARATION BETWEEN TANKS.

CONTACT WATER TANKS AND EVAPORATION BASIN SECTION A-A

HORIZONTAL SCALE: 1" = 10'
VERTICAL SCALE: 1" = 5'

NO.	REVISION DESCRIPTION	BY	DATE

PROJECT: 4-16108
DESIGNED: ML / TAP
DRAWN: ML / BAA
CHECKED: REC
APPROVED: TAP
DATE: MARCH 2017

GreatWest engineering®
3363 N. LAKEHARBOR LANE
BOISE, ID 83703
(208)676-6646

CAROTHERS ROAD SOLID WASTE FACILITY
CONTACT WATER AND FIRE SUPPRESSION WATER HOLDING TANKS PROJECT
CONTACT WATER TANKS AND EVAPORATION BASIN SECTION

SHEET NO.
6
OF 18

F:\4-16108-Whitman Co Contact Water Tank Project\CADD 4-16108\Sheets\4-16108-06-Section.dwg

EXISTING TEE (1)

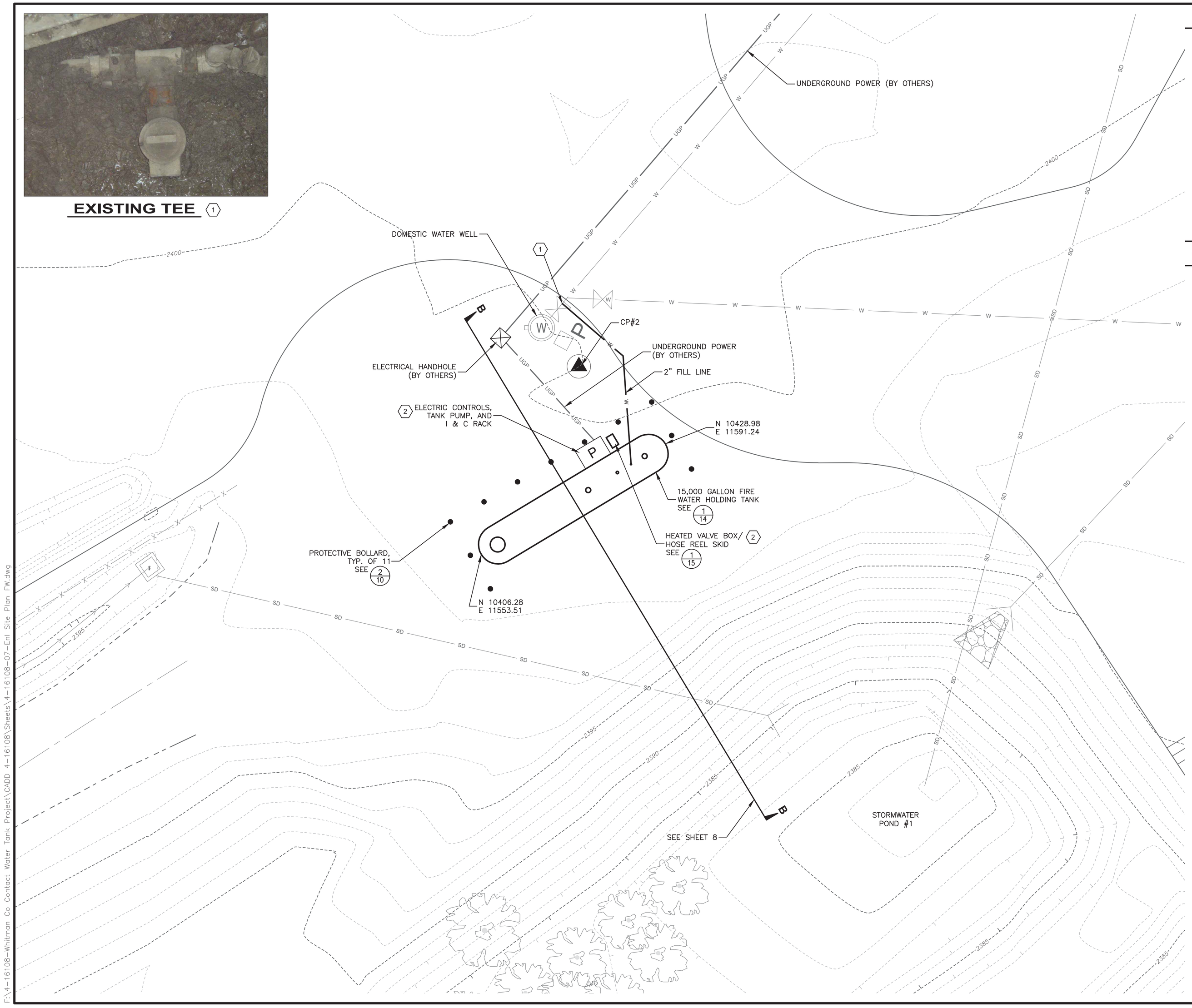

SHEET NOTES

1. SEE SHEET 2 FOR GENERAL PROJECT NOTES.
2. FOR FINISH GRADE, BLEND IN CRUSHED SURFACING AGGREGATE TO SURROUNDING GRADE. FINISH TO BE SMOOTH AND PROVIDE POSITIVE DRAINAGE TOWARD STORMWATER POND #1.

KEYED NOTES

1. CONNECT TO EXISTING TEE AND VALVE.
2. PLACE HEATED VALVE BOX/HOSE REEL SKID NEXT TO ELECTRICAL RACK (PAD AND RACK BY OWNERS' ELECTRICIAN). SECURE SKID SYSTEM TO CONCRETE PAD USING EPOXY CONCRETE ANCHOR BOLTS. COORDINATE WITH OWNER'S ELECTRICIAN.
3. COORDINATE TANK PIPE CONNECTIONS AND VENT WITH TANK SUPPLIER AND ADJUST PIPE ALIGNMENTS ACCORDINGLY.

NO.	REVISION DESCRIPTION	BY	DATE

PROJECT: 4-16108
DESIGNED: MIL / TAP
DRAWN: MIL / BAA
CHECKED: REC
APPROVED: TAP
DATE: MARCH 2017

STATE OF IDAHO
BRYAN A. PITLE
16288
PROFESSIONAL ENGINEER

GreatWest engineering®
3368 N. LAKEHARBOR LANE
BOISE, ID 83703
(208)676-6646

CAROTHERS ROAD SOLID WASTE FACILITY
CONTACT WATER AND FIRE SUPPRESSION WATER HOLDING TANKS PROJECT
FIRE SUPRESSION WATER HOLDING TANK ENLARGED SITE PLAN

SHEET NO.
7
OF 18

F:\4-16108-Whitman Co Contact Water Tank Project\CADD 4-16108\Sheets\4-16108-07-Enl Site Plan FW.dwg

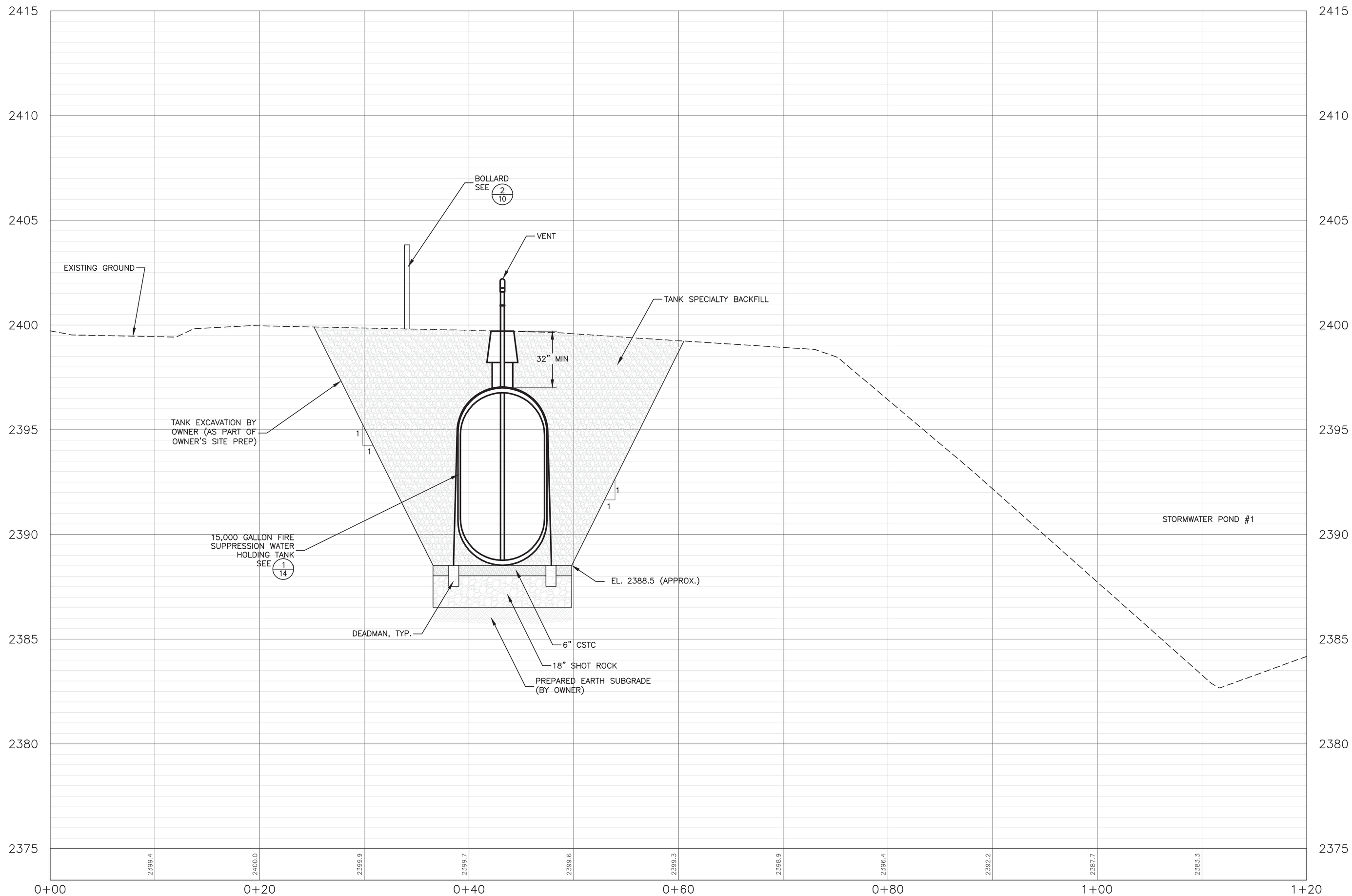

FIRE WATER TANK SECTION B-B

HORIZONTAL SCALE: 1" = 10'
VERTICAL SCALE: 1" = 5'

NO.	REVISION DESCRIPTION	BY	DATE

PROJECT: 4-16108
DESIGNED: ML / TAP
DRAWN: ML / BAA
CHECKED: REC
APPROVED: TAP
DATE: MARCH 2017

GreatWest engineering®
3368 N. LAKEHARBOR LANE
BOISE, ID 83703
(208)676-6646

CAROTHERS ROAD SOLID WASTE FACILITY
CONTACT WATER AND FIRE SUPPRESSION WATER HOLDING TANKS PROJECT

FIRE SUPRESSION WATER HOLDING TANK SECTION

SHEET NO.
8
OF 18

F:\4-16108-Whitman Co Contact Water Tank Project\CADD 4-16108\Sheets\4-16108-08-Section.dwg

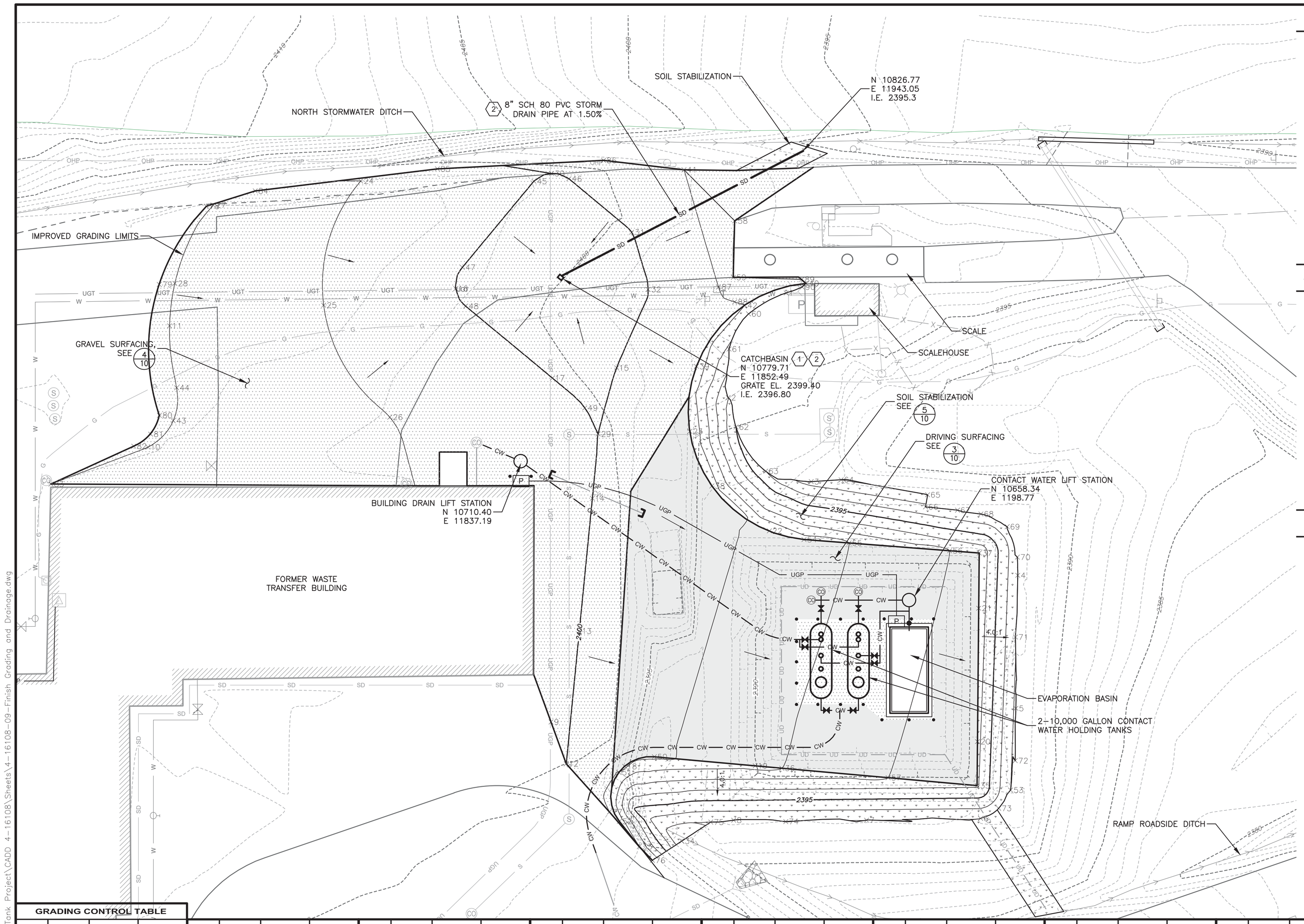

GENERAL PROJECT NOTES

1. SEE SHEET 2 FOR GENERAL PROJECT NOTES.
2. ELEVATIONS GIVEN ARE SHOWN TO FINISH GRADE.
3. SLOPE UNIFORMLY BETWEEN CONTOURS AS SHOWN ON PLAN AND ACCORDING TO SPOT ELEVATIONS GIVEN IN GRADING CONTROL TABLE.

KEYED NOTES

1. TYPE 1 CATCHBASIN AS MANUFACTURED BY WILBERT PRECAST, OR EQUIVALENT.
2. ADJUST PLACEMENT OF CATCHBASIN AND STORM DRAIN PIPE AS REQUIRED TO AVOID EXISTING UTILITIES WHILE MAINTAINING DRAINAGE TO AND FROM CATCHBASIN.

LEGEND

- SOIL STABILIZATION
- GRAVEL SURFACING
- DRIVING SURFACING

GRADING CONTROL TABLE

Point #	Elevation	Northing	Easting	Point #	Elevation	Northing	Easting	Point #	Elevation	Northing	Easting	Point #	Elevation	Northing	Easting
1	2398.093	10773.5249	11936.7071	11	2402.000	10761.1737	11705.6302	21	2396.632	10655.3096	12008.8539	31	2400.000	10796.2652	11878.7744
2	2396.046	10734.3031	11914.9468	12	2400.000	10597.0015	11854.2591	22	2398.759	10684.3023	11930.3888	32	2399.996	10774.8394	11884.9426
3	2392.616	10702.7630	11946.1013	13	2400.000	10646.7370	11859.1741	23	2399.818	10721.6239	11900.6125	33	2398.000	10565.9312	11881.6300
4	2393.094	10667.6375	12023.4722	14	2400.000	10696.4976	11864.0618	24	2401.000	10815.4807	11777.2506	34	2392.000	10567.9902	11897.5540
5	2392.801	10617.7481	12022.7742	15	2399.999	10745.4284	11873.1522	25	2401.000	10768.9322	11763.3831	35	2396.164	10588.7779	12008.2322
6	2393.073	10576.5074	12009.5807	16	2400.000	10775.1570	11812.8688	26	2401.000	10726.9418	11788.1387	36	2398.000	10595.3316	11935.0725
7	2393.021	10575.8409	11966.8185	17	2400.000	10741.5823	11849.1193	27	2402.000	10806.5013	11721.8892	37	2396.776	10675.9929	12009.0472
8	2393.148	10575.8308	11917.0365	18	2399.052	10596.0266	11876.1594	28	2402.000	10777.1054	11707.6036	38	2399.452	10701.1349	11908.8698
9	2400.193	10612.6650	11848.5684	19	2398.250	10596.2225	11925.1274	29	2400.000	10720.6387	11866.1961	39	2399.456	10745.9774	11903.0550
10	2401.999	10715.7146	11697.5238	20	2396.280	10605.3131	12008.3867	30	2400.000	10818.3230	11848.7728	40	2398.389	10777.0814	11944.1341

Point #	Elevation	Northing	Easting	Point #	Elevation	Northing	Easting	Point #	Elevation	Northing	Easting	Point #	Elevation	Northing	Easting
41	2399.000	10819.6830	11898.4117	51	2398.985	10593.7589	11874.0116	61	2397.825	10752.4823	11915.2949	71	2393.092	10644.5010	12022.6117
42	2399.000	10768.8369	11921.0388	52	2398.682	10575.3767	11874.1738	62	2395.000	10723.2586	11917.9292	72	2392.674	10598.1595	12022.5454
43	2401.998	10725.6004	11706.9802	53	2393.000	10587.1170	12020.7704	63	2394.000	10706.7066	11929.0125	73	2393.227	10580.2877	12016.3024
44	2402.000	10737.9644	11708.2525	54	2398.422	10681.0531	11943.3950	64	2392.000	10703.4582	11957.2837	74	2392.962	10575.2939	11936.5442
45	2400.000	10815.3762	11842.1573	55	2398.000	10679.7544	11960.2448	65	2392.124	10697.8337	11989.6982	75	2392.992	10575.1240	11908.4469
46	2400.000	10816.3293	11855.2805	56	2397.000	10676.8487	11997.9442	66	2393.279	10693.2948	11988.9061	76	2397.597	10560.7857	11886.5532
47	2400.000	10783.1167	11815.3514	57	2397.000	10591.7627	11974.9130	67	2393.113	10692.0681	12000.9195	77	2399.000	10578.9127	11870.4443
48	2400.000	10768.5637	11816.5688	58	2398.830	10800.5566	11917.3988	68	2393.124	10690.6401	12009.6974	78	2402.020	10806.0304	11719.4363
49	2399.999	10730.3900	11861.2133	59	2398.929	10779.3803	11916.8888	69	2393.179	10685.8608	12019.5284	79	2402.146	10776.6915	11701.7547
50	2399.199	10599.6125	11887.2846	60	2398.351	10765.6810	11922.6017	70	2393.192	10674.4663	12023.3360	80	2402.329	10727.6193	11701.8020

Point #	Elevation	Northing	Easting
81	2402.213	10720.5808	11698.5089
82	2402.192	10716.0483	11692.1969
83	2402.000	10701.8552	11661.1780
84	2401.414	10811.7730	11737.7167
85	2400.517	10820.0491	11805.9867
86	2399.198	10823.2188	11868.2689
87	2399.001	10775.7644	11911.3453
88	2399.002	10770.1428	11917.4112
89	2398.277	10778.5916	11942.5134
90	2398.147	10775.7489	11942.7088

NO.	REVISION DESCRIPTION	BY	DATE

PROJECT: 4-16108
DESIGNED: ML / TAP
DRAWN: ML / BAA
CHECKED: REC
APPROVED: TAP
DATE: MARCH 2017

GreatWest engineering®
3363 N. LAKEHARBOR LANE
BOISE, ID 83703
(208)676-6646

CAROTHERS ROAD SOLID WASTE FACILITY
CONTACT WATER AND FIRE SUPPRESSION WATER HOLDING TANKS PROJECT

FINISH GRADING AND DRAINAGE PLAN

SHEET NO.
9
OF 18

F:\4-16108-Whitman Co Contact Water Tank Project\CADD 4-16108\Sheets\4-16108-09-Finish Grading and Drainage.dwg

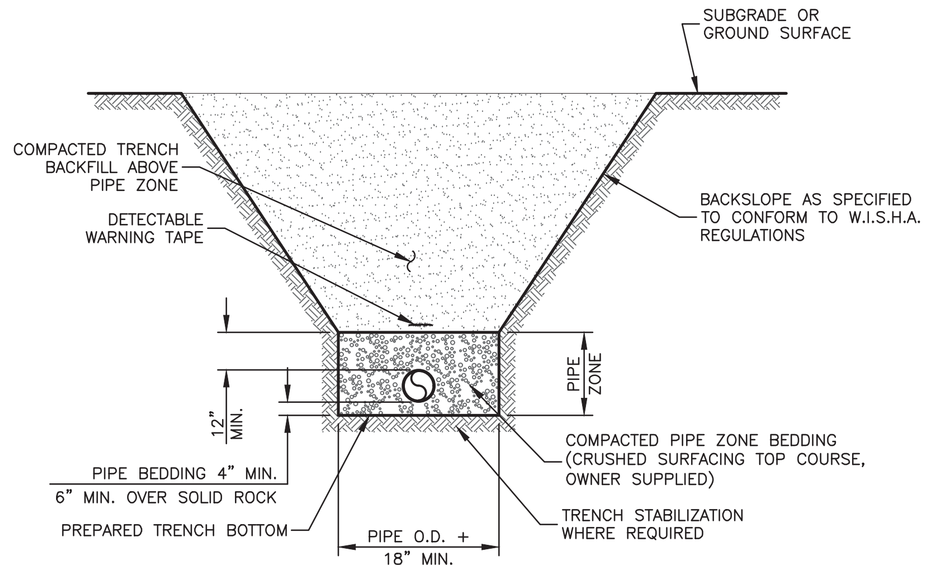

1/10 PIPE TRENCH

NOT TO SCALE

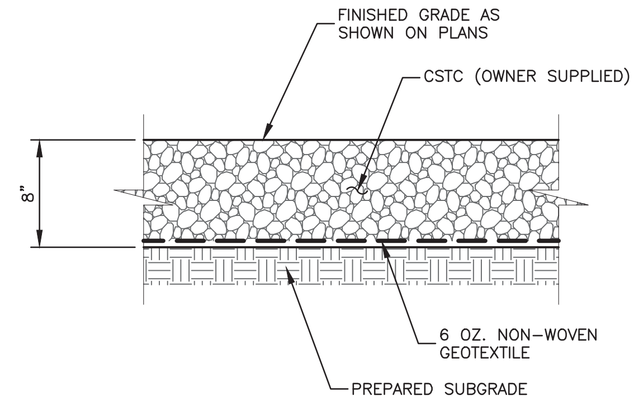

3/10 DRIVING SURFACING DETAIL

NOT TO SCALE

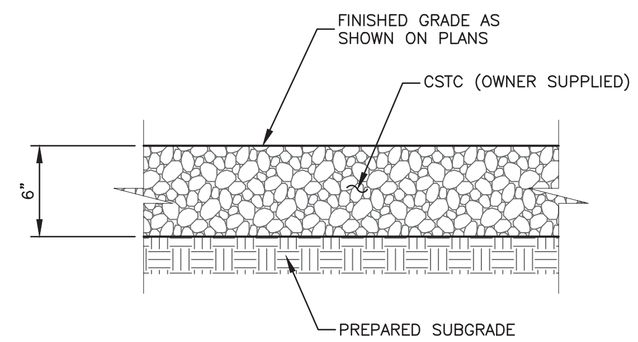

NOTES:
1. IN AREAS PREVIOUSLY ROCK SURFACED, PROVIDE A MINIMUM OF 6" CSTC.

4/10 GRAVEL SURFACING DETAIL

NOT TO SCALE

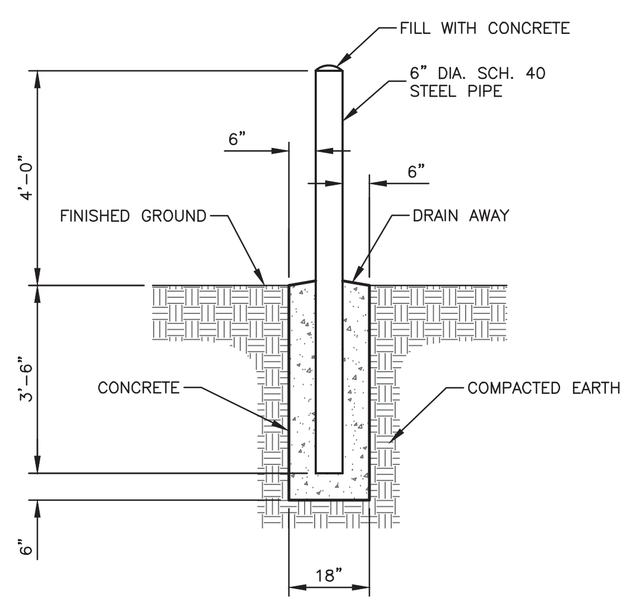

NOTES:
1. PAINT ALL EXPOSED STEEL WITH 2 COATS OF TRAFFIC YELLOW.

2/10 BOLLARD DETAIL

NOT TO SCALE

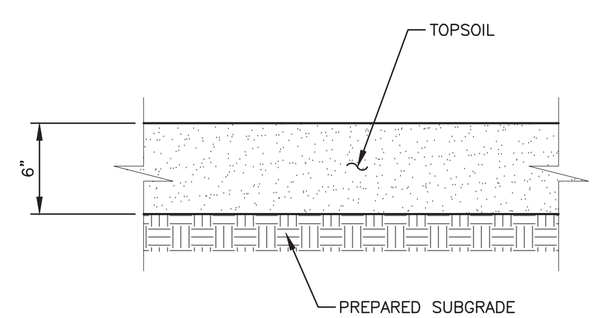

NOTES:
1. PLACE TOPSOIL WITH LOW COMPACTION TECHNIQUES. TRACK WALK SLOPES (PERPENDICULAR TO SLOPES) BEFORE SEEDING.

5/10 SOIL STABILIZATION DETAIL

NOT TO SCALE

NO.	REVISION DESCRIPTION	BY	DATE

PROJECT: 4-16108
DESIGNED: ML / TAP
DRAWN: ML / BAA
CHECKED: REC
APPROVED: TAP
DATE: MARCH 2017

GreatWest engineering®
3363 N. LAKEHARBOR LANE
BOISE, ID 83703
(208)576-6646

CAROTHERS ROAD SOLID WASTE FACILITY
CONTACT WATER AND FIRE SUPPRESSION WATER HOLDING TANKS PROJECT

GENERAL DETAILS

SHEET NO.
10
OF 18

F:\4-16108-Whitman Co Contact Water Tank Project\CADD 4-16108\Sheets\4-16108-10-Details.dwg

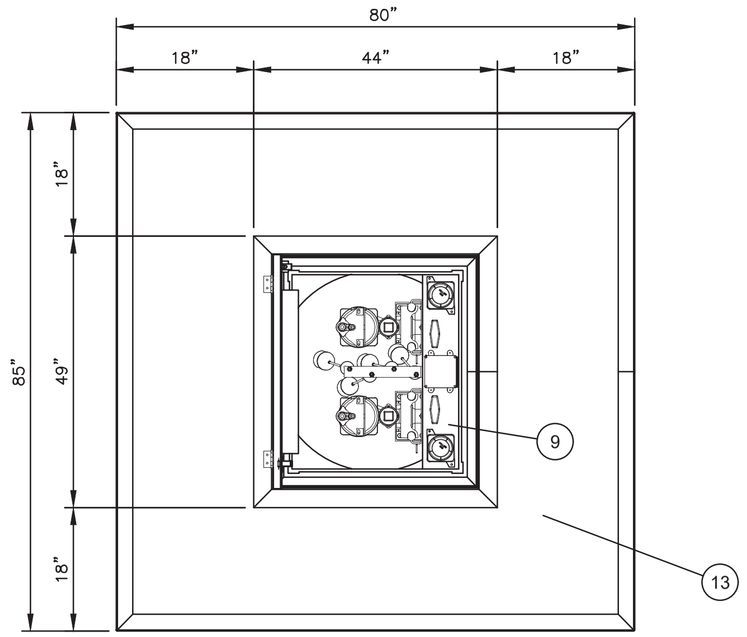

PLAN

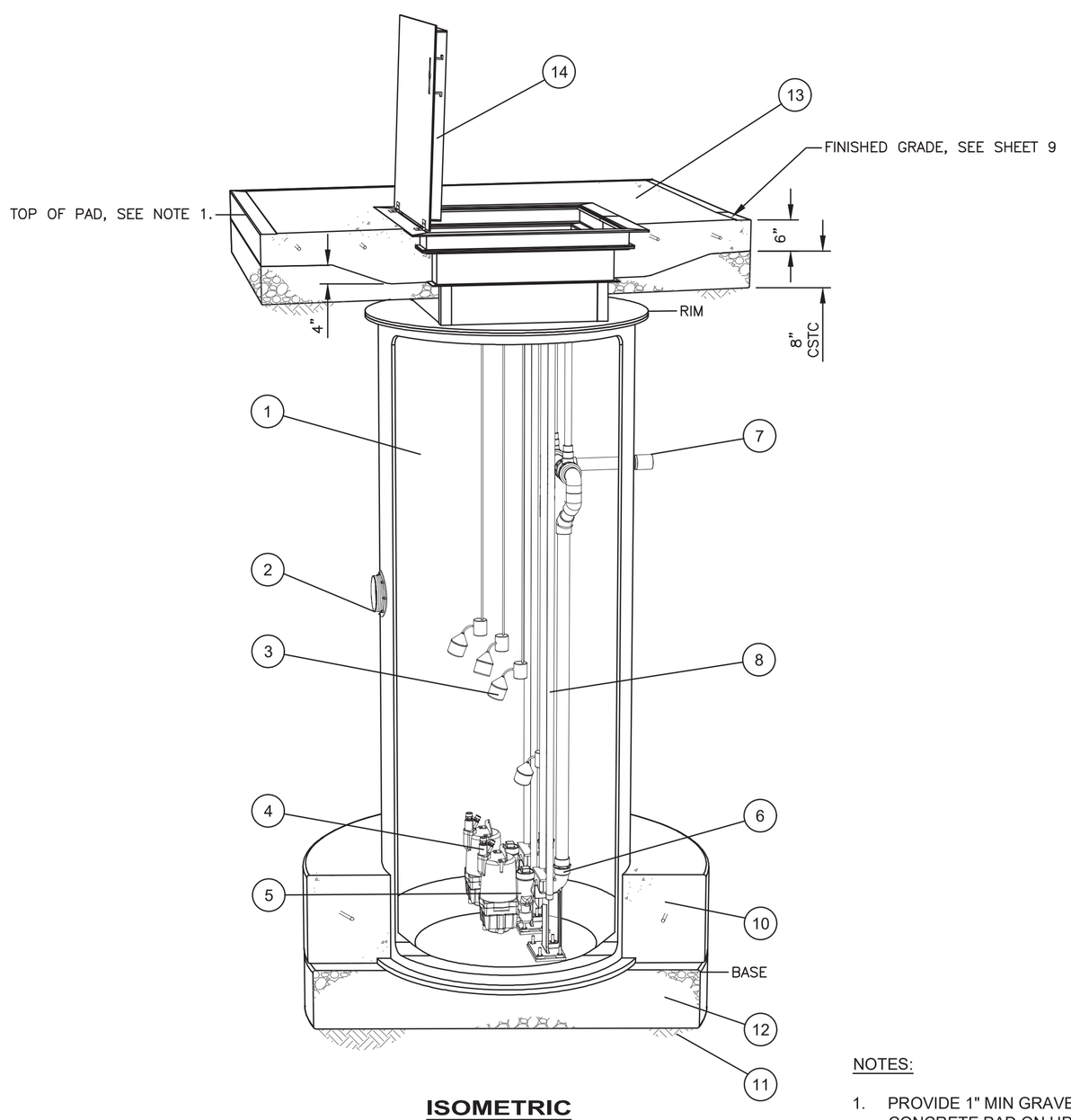

ISOMETRIC

NOTES:

1. PROVIDE 1" MIN GRAVEL LIP AROUND PERIMETER OF CONCRETE PAD ON UPHILL SIDE. SPREAD AND GRADE TO MATCH FINISH GRADE.

1/11 CONTACT WATER LIFT STATION

NOT TO SCALE

NO.	ELEV.	DESCRIPTION
1		48 IN X 174 IN FRP WET WELL
	2396.33	RIM-SEE DRAWING, ADJUST FOR HATCH AND CONC. SLAB
	2381.87	BASE
2	2385.50	IE - INLET HUB FOR 6 IN SDR17 HDPE PIPE (9:00 POSITION)
3		LEVEL SWITCHES-LEVLES SET BY PUMP STATION MANUFACTURER AND APPROVED BY ENGINEER.
4		MYERS SX200H PUMP, 2 HP, 200V/3 (x2) EXPLOSION-PROOF, 30 GPM @ 30 FT TDH (EACH)
5		2 IN BALL CHECK VALVE - REMOVABLE WITH PUMP
6		2 IN DISCHARGE ELBOW ASSEMBLY
7		2 IN SCHEDULE 80 PVC DISCHARGE (6:00 POSITION)
8		STAINLESS STEEL SLIDE RAILS
9		OPERATION DECK - JUNCTION BOXES - VALVE OPERATORS
10		REINFORCED CONCRETE ANTI-FLOTATION RING (24 IN WIDE X 12 IN DEEP)
11		PREPARED SUBGRADE
12		12 IN COMPACTED STRUCTURAL BASE (CSTC-OWNER SUPPLIED)
13		CONCRETE SLAB REINFORCED WITH #4 BAR, 12 IN O.C.E.W
14		TRAFFIC RATED ALUMINUM HATCH WITH SKIRT (HALLIDAY H1R)
15		DUPLEX ALTERNATING CONTROL PANEL
16		PANEL RACK AND CONDUITS
17		SUPPLY POWER CONDUIT
18		PUMP CONDUIT (X2)
19		LEVEL SWITCH CONDUIT

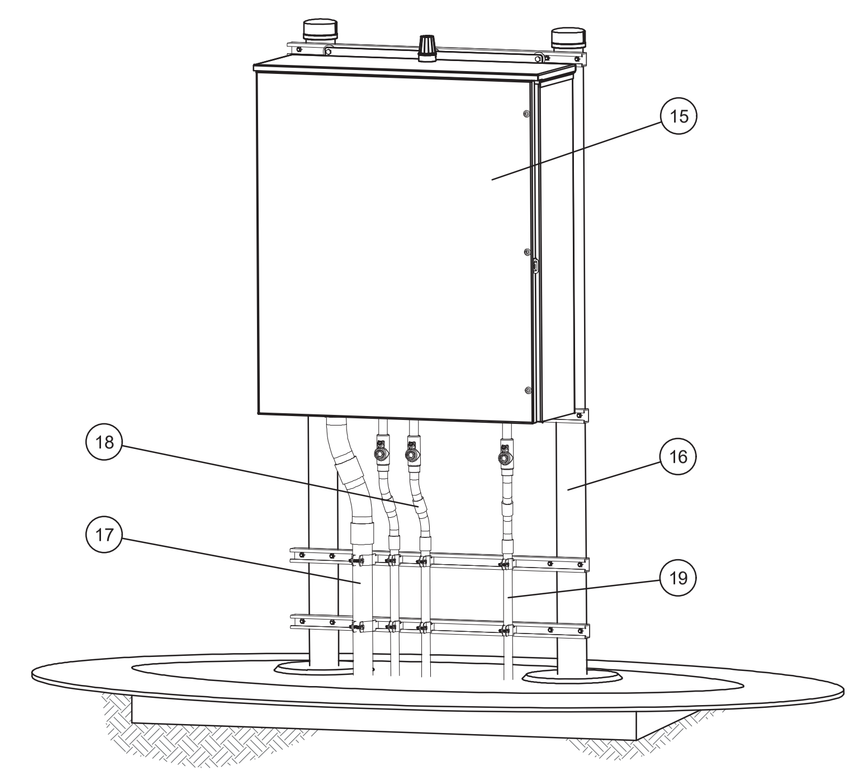

NOTES:

1. COORDINATE PANEL MOUNTING WITH OWNER'S ELECTRICIAN, WHO WILL PROVIDE PAD AND ELECTRICAL RACK ASSEMBLY.
2. OWNER'S ELECTRICIAN TO PROVIDE ALL ELECTRICAL AND MONITORING CONTROL CONDUITS AND WIRE.

2/11 CONTROL PANEL RACK

NOT TO SCALE

NO.	REVISION DESCRIPTION	BY	DATE

PROJECT: 4-16108
DESIGNED: ML / TAP
DRAWN: ML / BAA
CHECKED: REC
APPROVED: TAP
DATE: MARCH 2017

GreatWest engineering®
3368 N. LAKEHARBOR LANE
BOISE, ID 83703
(208)676-6646

CAROTHERS ROAD SOLID WASTE FACILITY
CONTACT WATER AND FIRE SUPPRESSION WATER HOLDING TANKS PROJECT

CONTACT WATER LIFT STATION DETAILS

SHEET NO.
11
OF 18

F:\4-16108-Whitman Co Contact Water Tank Project\CADD 4-16108\Sheets\4-16108-11-Details.dwg

ITEM	DESCRIPTION
1	XERXES 10,000 GALLON TANK, 8 FT DIAMETER, DOUBLE WALL (X2)
2	12 FOOT DEADMEN WITH TURNBUCKLES & STRAPS - TYP OF 2
3	16 FOOT DEADMEN WITH TURNBUCKLES & STRAPS - TYP OF 2
4	4 INCH NPT MONITORING FITTING
5	4 INCH RISER CONDUIT WITH JUNCTION BOX
6	ELECTRICAL HAND HOLE (PRECAST CONCRETE)
7	CONDUIT TO ALARM PANEL (SEE NOTES)
8	4 INCH HALF COUPLING - VENT
9	4 INCH SCREENED VENT (STAINLESS STEEL)
10	2 INCH FLANGED NOZZLE - LIFT STATION DISCHARGE
11	2 INCH FLANGED NOZZLE - WTB CONTACT WATER PRESSURE PIPE INLET
12	2 INCH FLANGED NOZZLE - BUILDING DRAIN LIFT STATION INLET
13	4 INCH FLANGED NOZZLE - OUTLET
14	24 INCH ACCESS RISER AND COVER

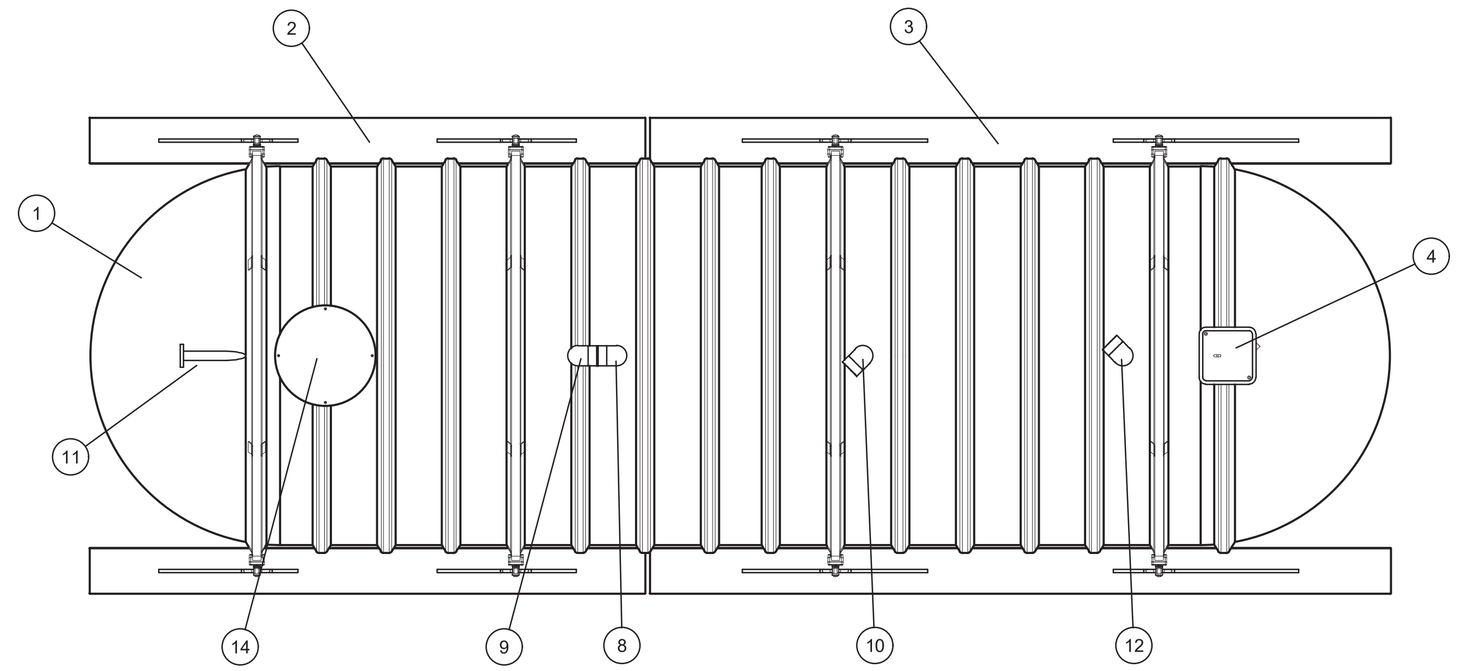

PLAN

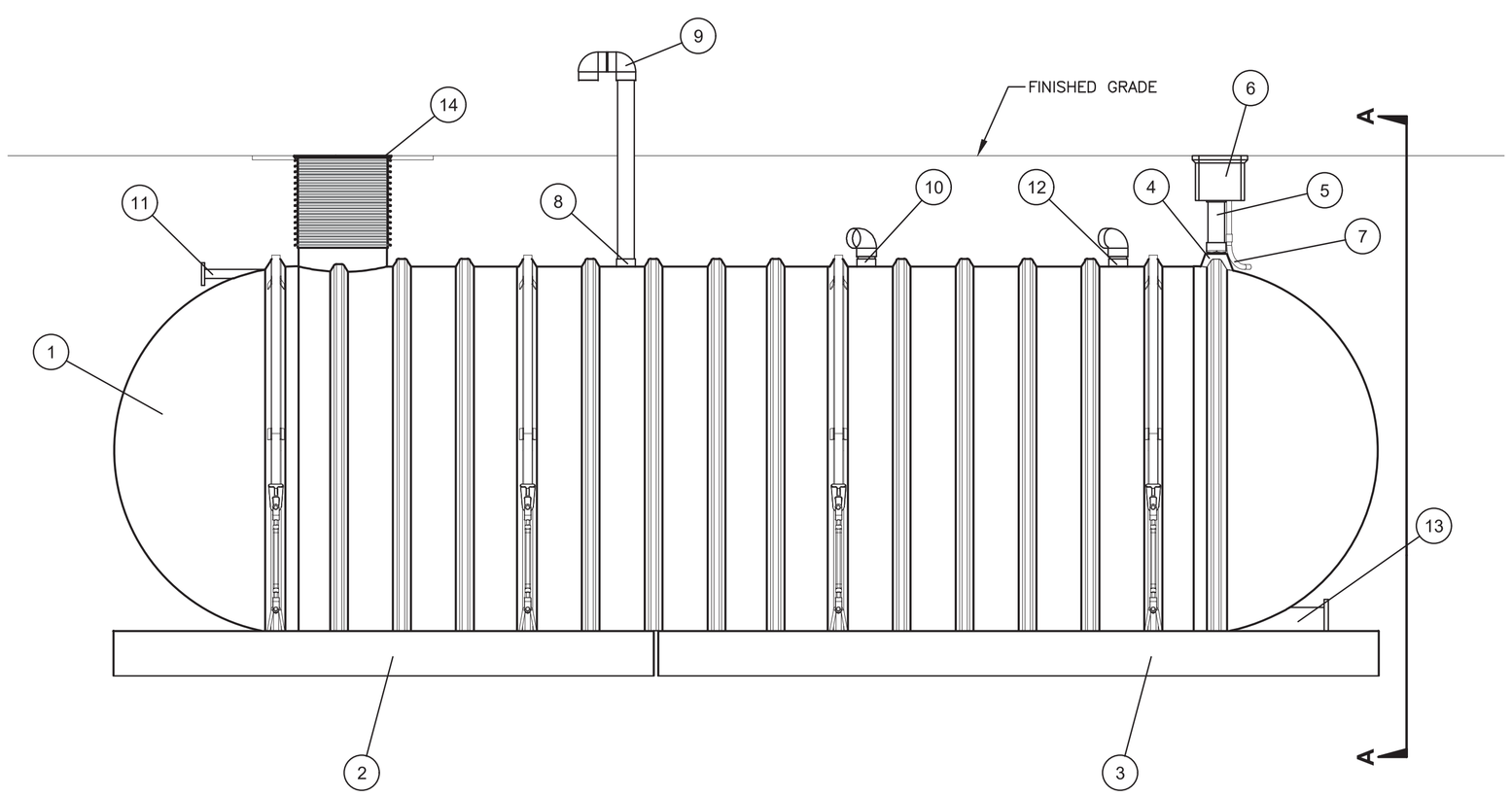

ELEVATION

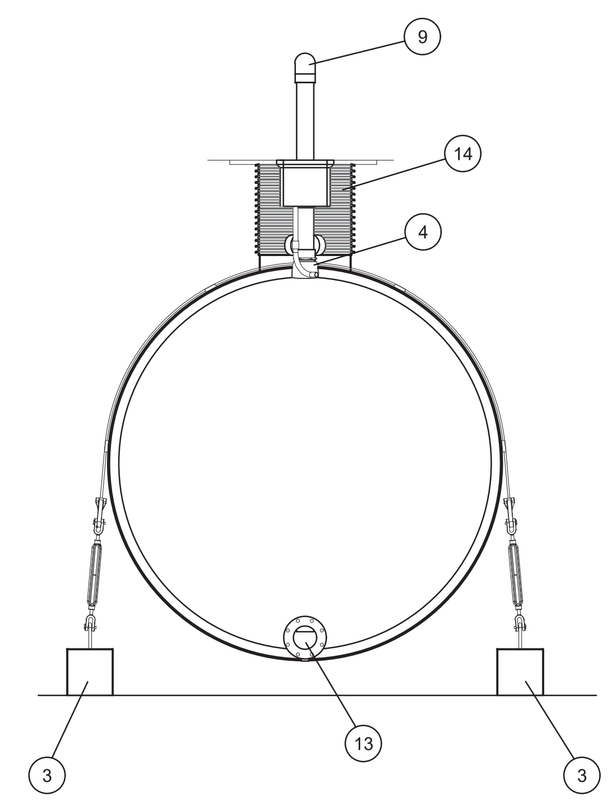

SECTION A-A

NOTES:

1. COORDINATE ARRANGEMENT OF FITTINGS AND ATTACHMENTS WITH SHEET 5.
2. PROVIDE 4" SCHEDULE 40 PVC VENT PIPING (BURIED) AND TRANSITION TO 4" SST AT VERTICAL ELBOW TO SURFACE. PROVIDE GOOSE-NECK ELBOW 30" ABOVE GROUND WITH SCREENED OPENING.
3. COORDINATE PANEL MOUNTING WITH OWNER'S ELECTRICIAN, WHO WILL PROVIDE PAD AND ELECTRICAL RACK ASSEMBLY.
4. OWNER'S ELECTRICIAN TO PROVIDE ALL ELECTRICAL AND MONITORING CONTROL CONDUITS AND WIRE.

1/12 **CONTACT WATER HOLDING TANKS**

NOT TO SCALE

NO.	REVISION DESCRIPTION	BY	DATE

PROJECT: 4-16108
DESIGNED: ML / TAP
DRAWN: ML / BAA
CHECKED: REC
APPROVED: TAP
DATE: MARCH 2017

GreatWest engineering®
3368 N. LAKEHARBOR LANE
BOISE, ID 83703
(208)676-6646

CAROTHERS ROAD SOLID WASTE FACILITY
CONTACT WATER AND FIRE SUPPRESSION WATER HOLDING TANKS PROJECT

CONTACT WATER TANK DETAILS

SHEET NO.
12
OF 18

F:\4-16108-Whitman Co Contact Water Tank Project\CADD 4-16108\Sheets\4-16108-12-Details.dwg

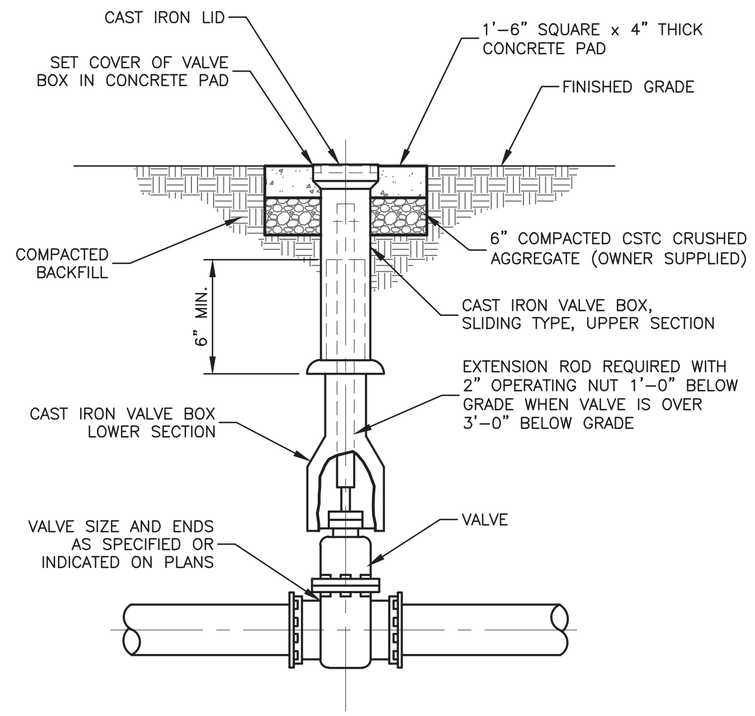

1/13 BURIED SERVICE VALVE

NOT TO SCALE

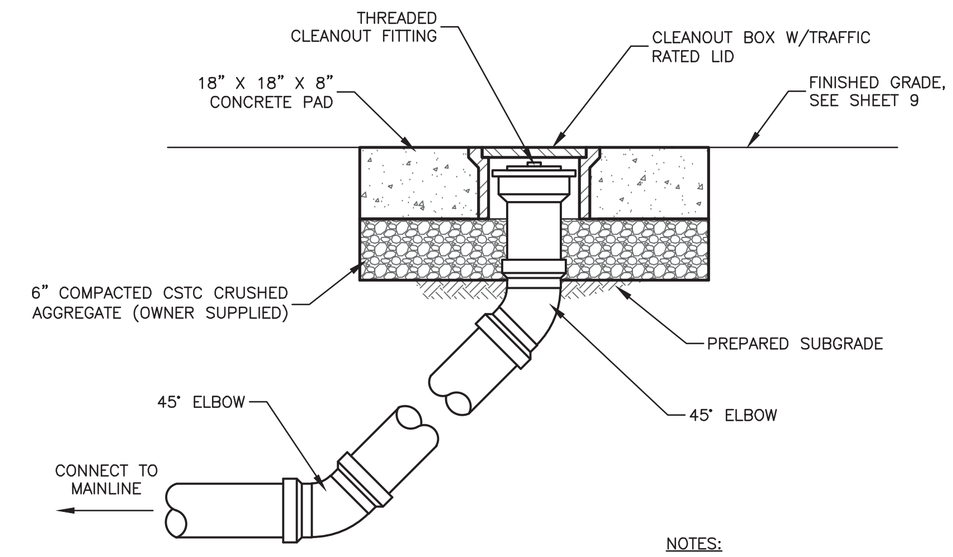

NOTES:

1. ALL CLEANOUT PIPE SHALL MATCH MAINLINE PIPE MATERIAL AND SDR.

2/13 CLEANOUT TO GRADE DETAIL

NOT TO SCALE

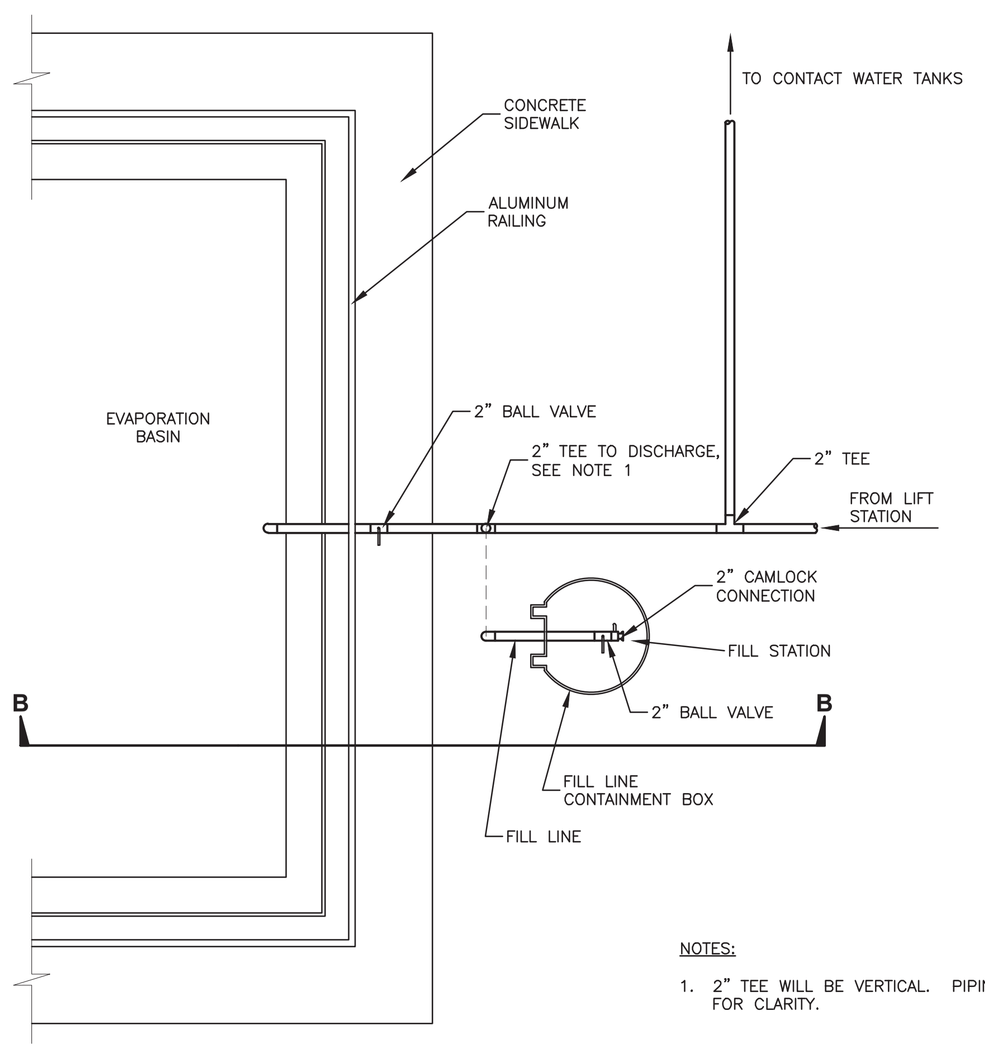

PLAN

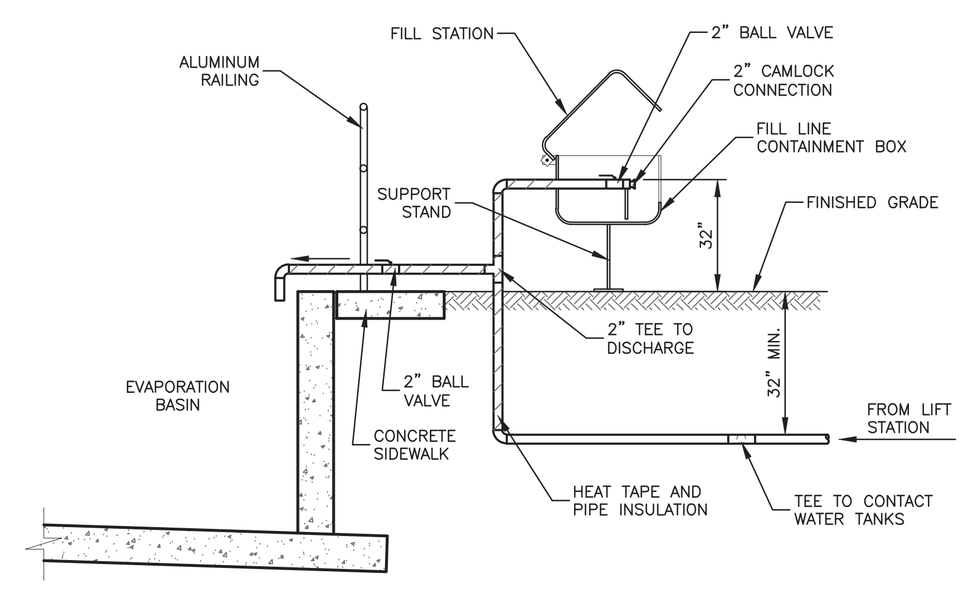

SECTION B-B

NOTES:

1. 2" TEE WILL BE VERTICAL. PIPING AND VALVES SHOWN OFFSET FOR CLARITY.

3/13 EVAPORATION BASIN PIPING DETAIL

NOT TO SCALE

NO.	REVISION DESCRIPTION	BY	DATE

PROJECT: 4-16108
DESIGNED: ML / TAP
DRAWN: ML / BAA
CHECKED: REC
APPROVED: TAP
DATE: MARCH 2017

STATE OF IDAHO, PHILLIP A. PILE, 13836, PROFESSIONAL ENGINEER

GreatWest engineering®
3368 N. LAKEHARBOR LANE
BOISE, ID 83703
(208)676-6646

CAROTHERS ROAD SOLID WASTE FACILITY
CONTACT WATER AND FIRE SUPPRESSION WATER HOLDING TANKS PROJECT

CONTACT WATER TANK DETAILS

SHEET NO.
13
OF 18

F:\4-16108-Whitman Co Contact Water Tank Project\CADD 4-16108\Sheets\4-16108-13-Details.dwg

ITEM	DESCRIPTION
1	XERXES 15,000 GALLON RESERVIOR TANK, 8 FT DIAMETER
2	16 FOOT DEADMEN WITH TURNBUCKLES & STRAPS - TYP OF 4
3	12 FOOT DEADMEN WITH TURNBUCKLES & STRAPS - TYP OF 2
4	6 INCH BOOSTER PUMP WET WELL
5	2 INCH HALF COUPLING - FILL WATER
6	6 INCH HALF COUPLING
7	6 INCH SCREENED VENT (STAINLESS STEEL)
8	6 INCH COUPLING WITH SUCTION PIPE - DRAFT TUBE (SST)
9	24 X 24 OLDCASTLE/CARSON 24 SERIES VAULT
10	6 INCH CAP WITH 1 INCH CONDUIT CONECTION
11	24 INCH ACCESS RISER AND COVER
12	AY MCDONALD PUMP, 2 HP, 208V/3 (CONNECT TO HOSE REEL)
13	1.5 INCH PITTLESS ADAPTER WITH FIPT DISCHARGE
14	2 INCH HYDRANT ADAPTER WITH DUST CAP - VERIFY CONFIGURATION WITH OWNER

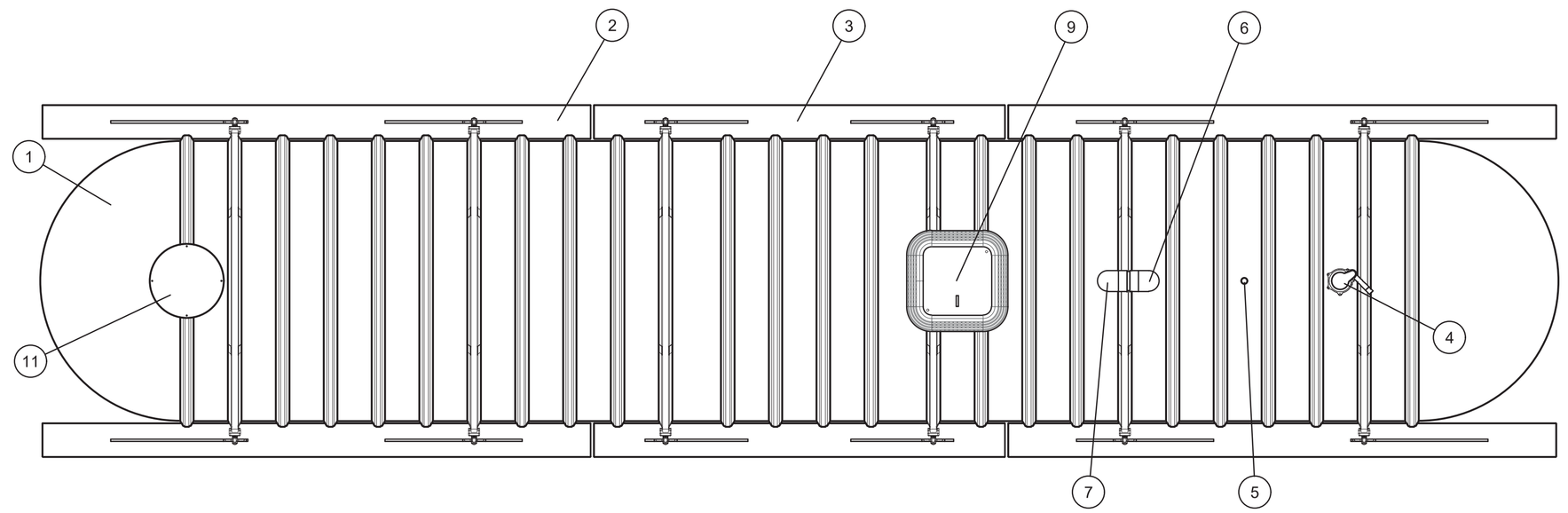

PLAN

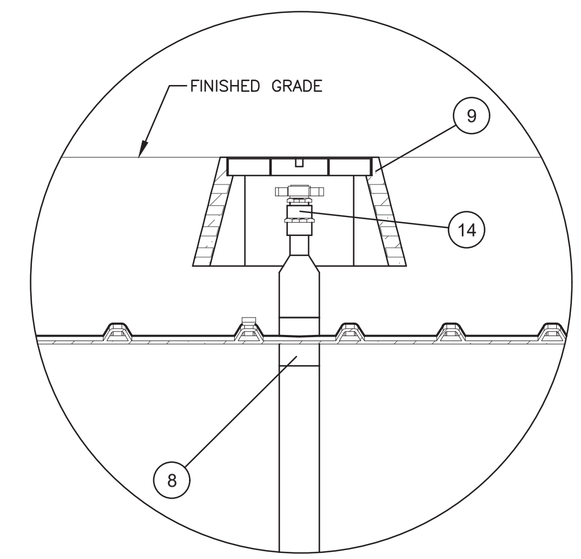

SUCTION/DRAW PIPE DETAIL

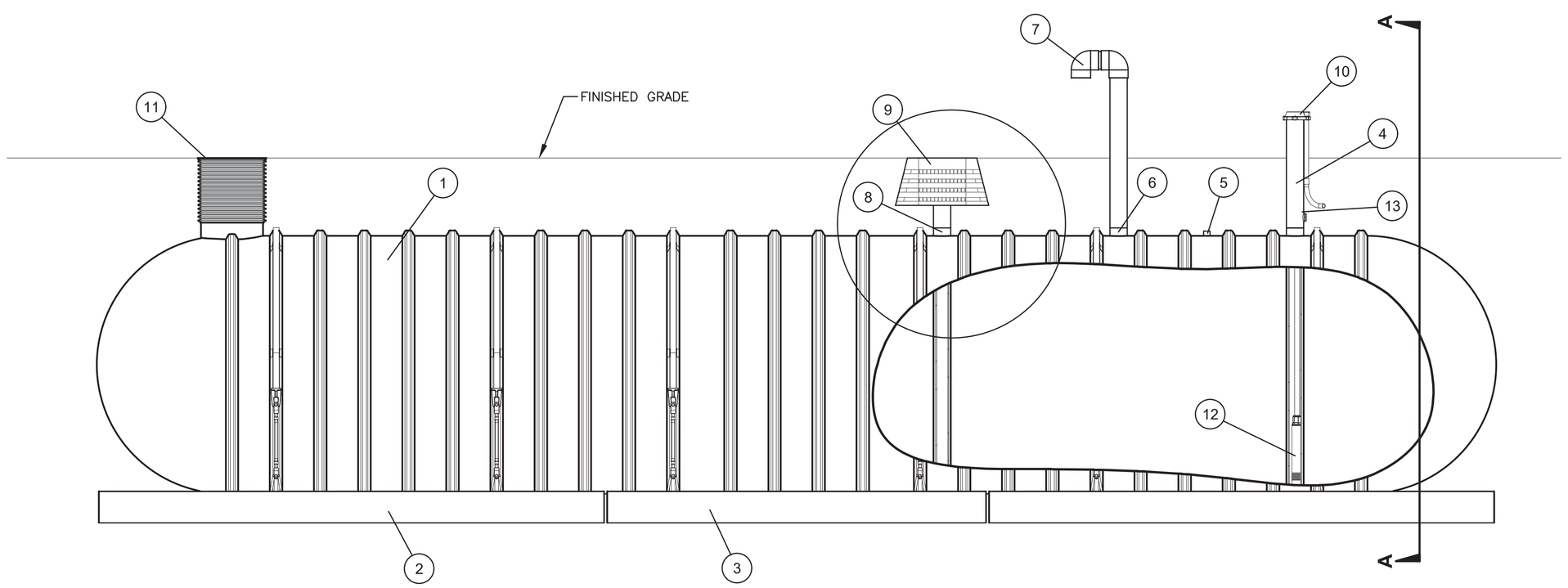

ELEVATION

NOTES:
1. COORDINATE ARRANGEMENT OF FITTINGS AND ATTACHMENTS WITH SHEET 7.
2. PROVIDE 4" SCHEDULE 40 PVC VENT PIPING (BURIED) AND TRANSITION TO 4" SST AT VERTICAL ELBOW TO SURFACE. PROVIDE GOOSE-NECK ELBOW 30" ABOVE GROUND WITH SCREENED OPENING.
3. COORDINATE PANEL MOUNTING WITH OWNER'S ELECTRICIAN, WHO WILL PROVIDE PAD AND ELECTRICAL RACK ASSEMBLY.
4. OWNER'S ELECTRICIAN TO PROVIDE ALL ELECTRICAL AND MONITORING CONTROL CONDUITS AND WIRE.

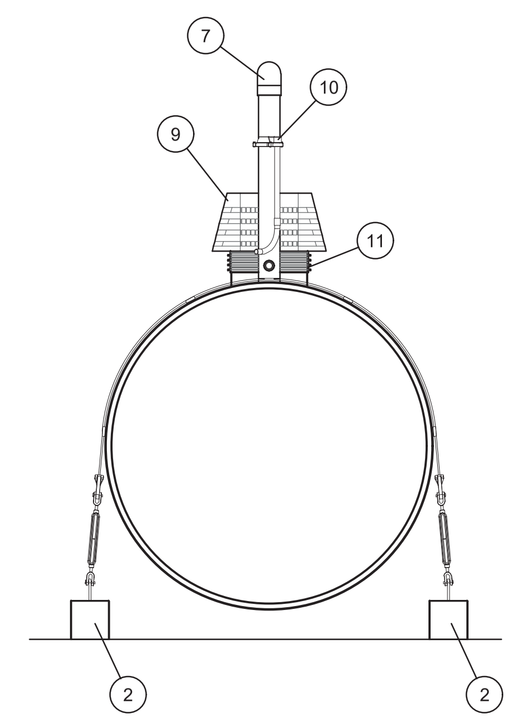

SECTION A-A

1/14 **FIRE SUPPRESSION WATER HOLDING TANK**
NOT TO SCALE

NO.	REVISION DESCRIPTION	BY	DATE

PROJECT: 4-16108
DESIGNED: ML / TAP
DRAWN: ML / BAA
CHECKED: REC
APPROVED: TAP
DATE: MARCH 2017

GreatWest engineering®
3368 N. LAKEHARBOR LANE
BOISE, ID 83703
(208)676-6646

CAROTHERS ROAD SOLID WASTE FACILITY
CONTACT WATER AND FIRE SUPPRESSION WATER HOLDING TANKS PROJECT
FIRE SUPRESSION WATER HOLDING TANK DETAILS

SHEET NO.
14
OF 18

F:\4-16108-Whitman Co Contact Water Tank Project\CADD 4-16108\Sheets\4-16108-14-Details.dwg

ITEM	DESCRIPTION
1	FABRICATED STEEL SKID, EPOXY COATING
2	SAFETCOVER 100SNT-AL VALVE BOX, WITH 120V HEAT TRACE
3	CONTROL PANEL, 2 HP, 230V/3, 120V/1 CONTROL POWER, MANUAL WASHDOWN ON/OFF, AUTOMATIC TANK FILL
4	HOSE REEL, W/1.5 IN X 100 FT HOSE
5	1.5 IN CLAVAL SOLENOID FILL VALVE
6	1.5 IN BACKFLOW PREVENTER
7	1.5 IN SCH 40 STAINLESS STEEL MANIFOLD WITH ISOLATION BALL VALVE
8	1.5 IN SCH 40 STAINLESS STEEL DISCHARGE MANIFOLD, ISOLATION VALVE, CAMLOCK DISCONNECT FOR DRAINING AND WINTERIZATION

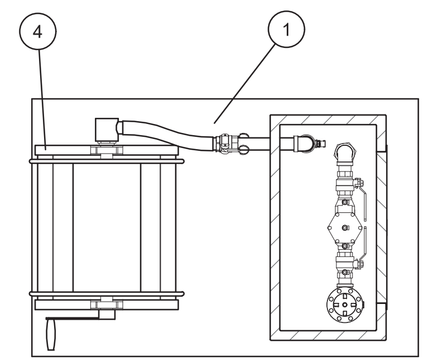

SECTION A-A

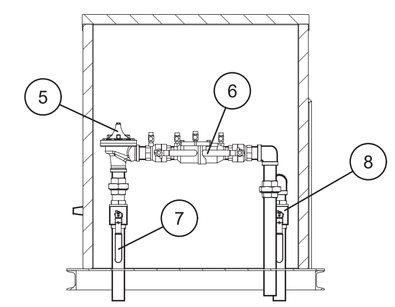

SECTION B-B

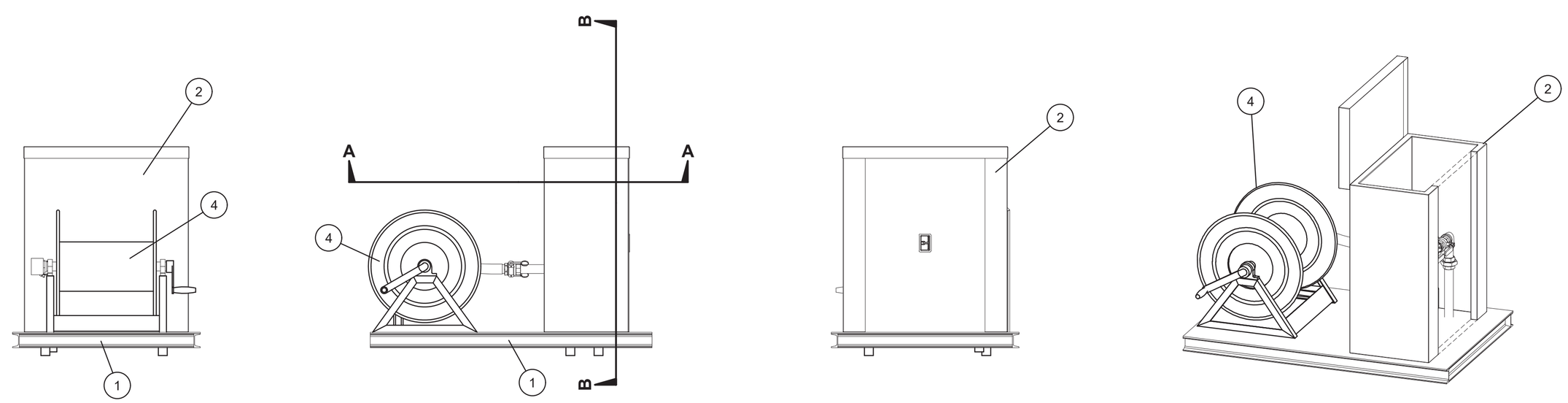

NOTES:

1. MOUNT ASSEMBLY ON ELECTRICIANS PAD. COORDINATE WITH ELECTRICIAN FOR ALL PLUMBING.
2. MOUNT PUMP CONTROL PANEL ON ELECTRICIANS PAD.
3. OWNER'S ELECTRICIAN TO PROVIDE ALL ELECTRICAL AND MONITORING CONTROL CONDUITS AND WIRE.

1/15 **HEATED VALVE BOX/HOSE REEL SKID**
NOT TO SCALE

NO.	REVISION DESCRIPTION	BY	DATE

PROJECT: 4-16108
DESIGNED: ML / TAP
DRAWN: ML / BAA
CHECKED: REC
APPROVED: TAP
DATE: MARCH 2017

STATE OF WASHINGTON PRESTON A. PILE 43830 REGISTERED PROFESSIONAL ENGINEER

GreatWest engineering®
3368 N. LAKEHARBOR LANE
BOISE, ID 83703
(208)576-6646

CAROTHERS ROAD SOLID WASTE FACILITY
CONTACT WATER AND FIRE SUPPRESSION WATER HOLDING TANKS PROJECT

FIRE SUPRESSION WATER HOLDING TANK DETAILS

SHEET NO.
15
OF 18

F:\4-16108-Whitman Co Contact Water Tank Project\CADD 4-16108\Sheets\4-16108-15-Details.dwg

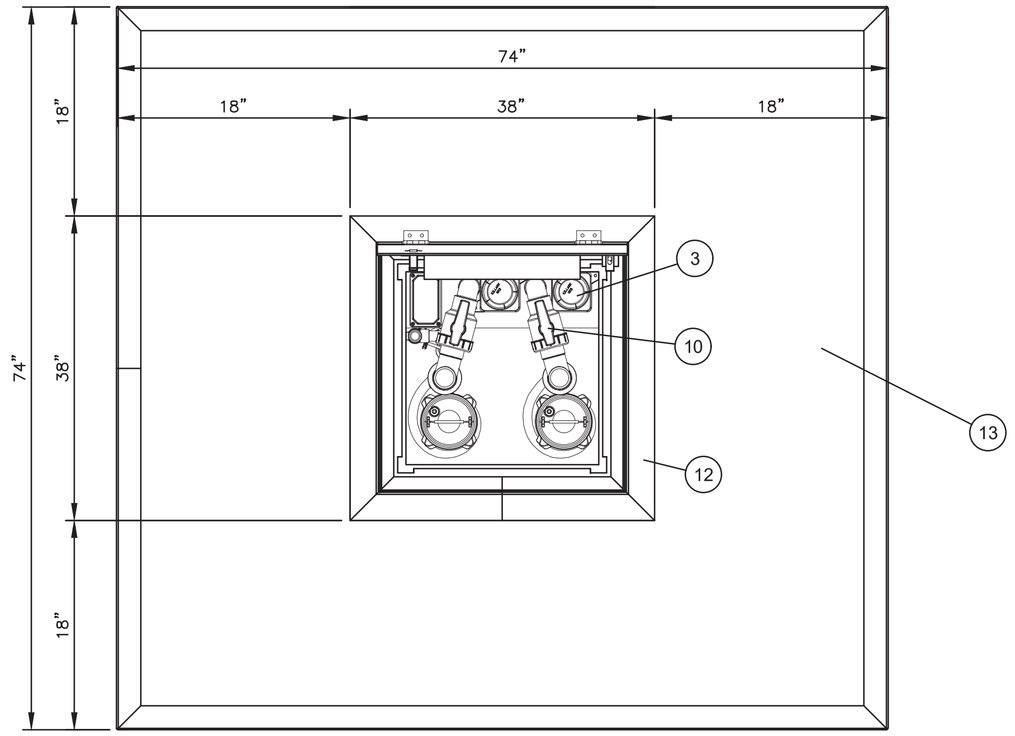

PLAN

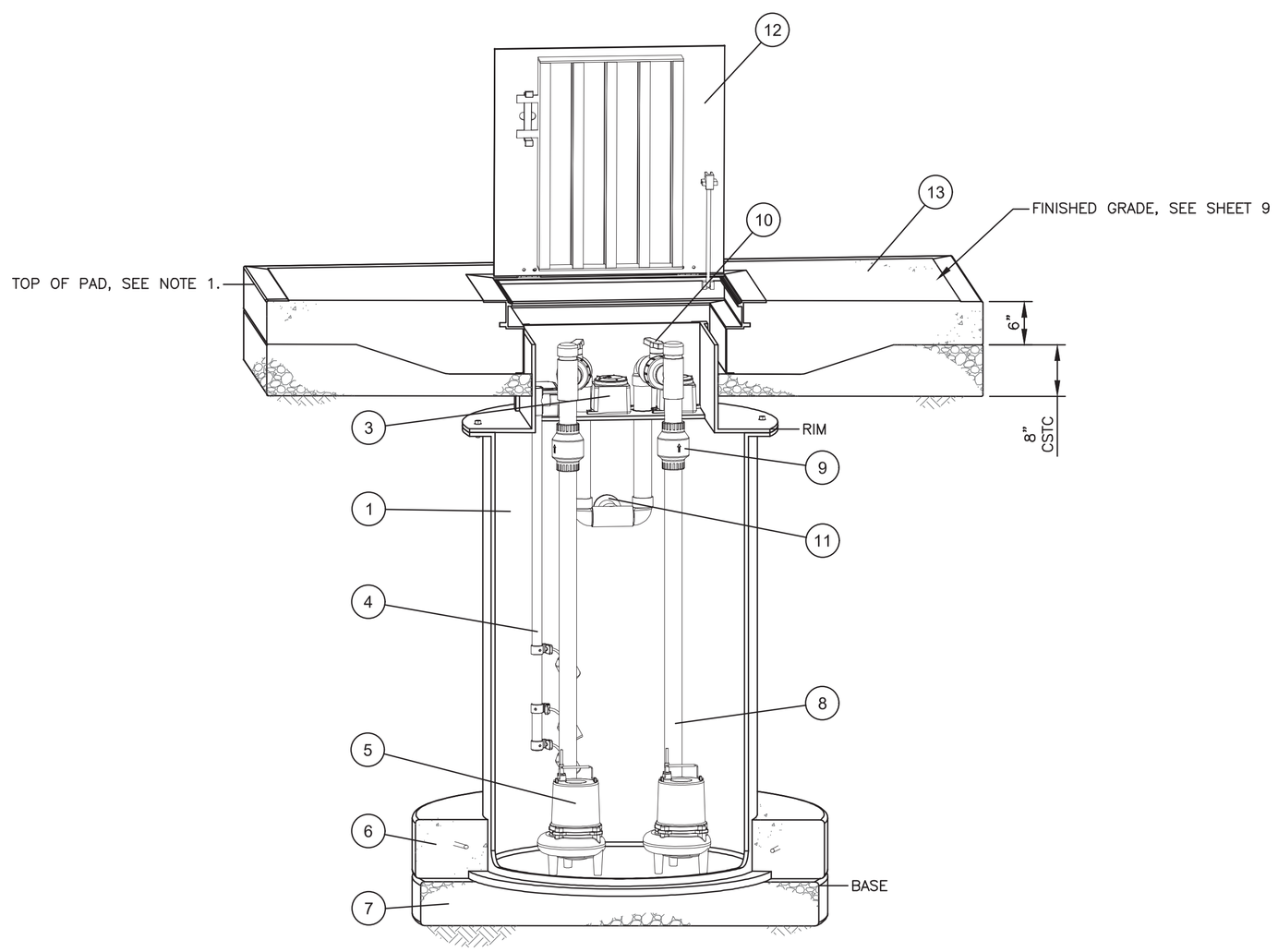

ISOMETRIC

NOTES:

1. PROVIDE 1" MIN GRAVEL LIP AROUND PERIMETER OF CONCRETE PAD ON UPHILL SIDE. SPREAD AND GRADE TO MATCH FINISH GRADE.

1/16 BUILDING DRAIN LIFT STATION

NOT TO SCALE

NO.	ELEV.	DESCRIPTION
1		36 IN X 132 IN FRP WET WELL
	2399.33	RIM
	2388.33	BASE
2	2392.00	IE - 4 IN SDR35 PVC INLET 9:00 POSITION (NOT SHOWN)
3		ELECTRICAL SPLICE BOX(ES)
4		LEVEL SWITCHES-LEVLES SET BY PUMP STATION MANUFACTURER AND APPROVED BY ENGINEER.
5		MYERS SX50 PUMP, 1/2 HP, 200V/3 (X2) EXPLOSION-PROOF, 20 GPM @ 20 FT TDH
6		REINFORCED CONCRETE ANTI-FLOTATION RING (24 IN WIDE X 12 IN DEEP)
7		12 IN COMPACTED STRUCTURAL BASE (CSTC-OWNER SUPPLIED)
8		2 IN SCH 40 PVC DISCHARGE ASSEMBLY
9		2 IN CHECK VALVE
10		2 IN BALL VALVE
11	2396.00	IE - 2 IN FIPT DISCHARGE 3:00 POSITION
12		TRAFFIC RATED ALUMINUM HATCH WITH SKIRT (HALLIDAY H1R)
13		REINFORCED CONCRETE SLAB
14		DUPLEX ALTERNATING CONTROL PANEL MOUNTED ON BUILDING
15		SUPPLY POWER CONDUIT
16		PUMP CONDUIT (X2)
17		LEVEL SWITCH CONDUIT

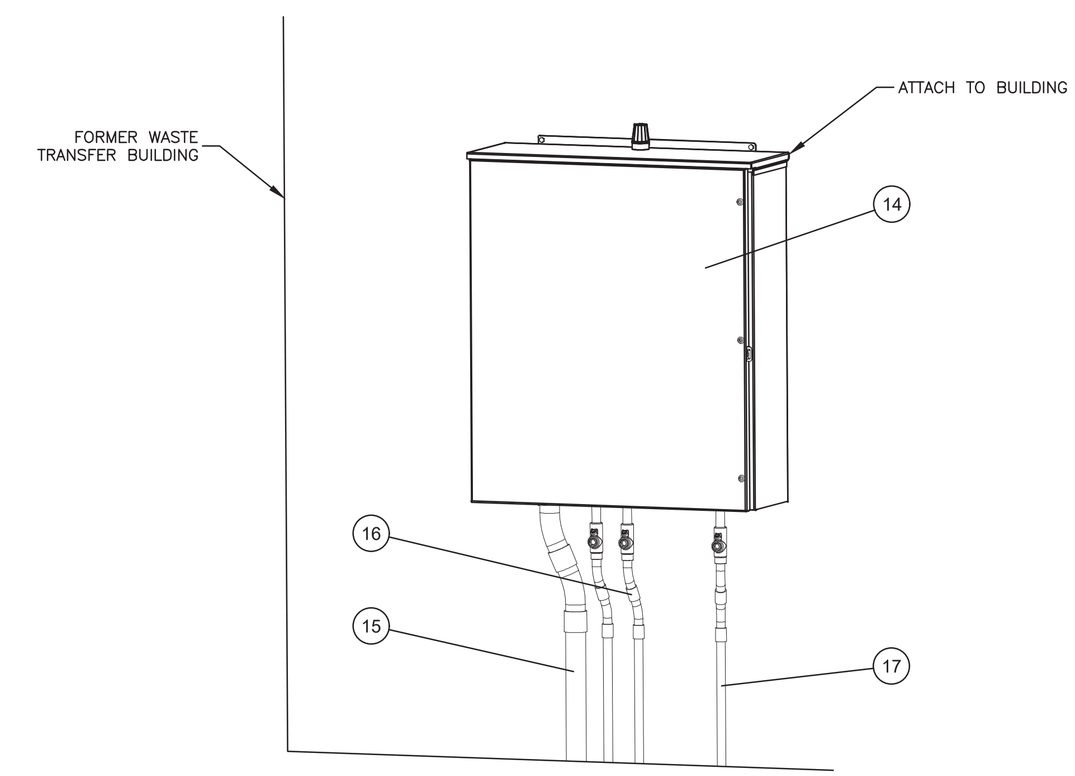

NOTES:

1. COORDINATE PANEL MOUNTING WITH OWNER'S ELECTRICIAN, WHO WILL PROVIDE PAD AND ELECTRICAL RACK ASSEMBLY.
2. OWNER'S ELECTRICIAN TO PROVIDE ALL ELECTRICAL AND MONITORING CONTROL CONDUITS AND WIRE.

2/16 CONTROL PANEL RACK

NOT TO SCALE

NO.	REVISION DESCRIPTION	BY	DATE

PROJECT: 4-16108
DESIGNED: MIL / TAP
DRAWN: MIL / BAA
CHECKED: REC
APPROVED: TAP
DATE: MARCH 2017

GreatWest engineering®
3368 N. LAKEHARBOR LANE
BOISE, ID 83703
(208)676-6646

CAROTHERS ROAD SOLID WASTE FACILITY
CONTACT WATER AND FIRE SUPPRESSION WATER HOLDING TANKS PROJECT

BUILDING DRAIN LIFT STATION DETAILS

SHEET NO.
16
OF 18

F:\4-16108-Whitman Co Contact Water Tank Project\CADD 4-16108\Sheets\4-16108-16-Details.dwg

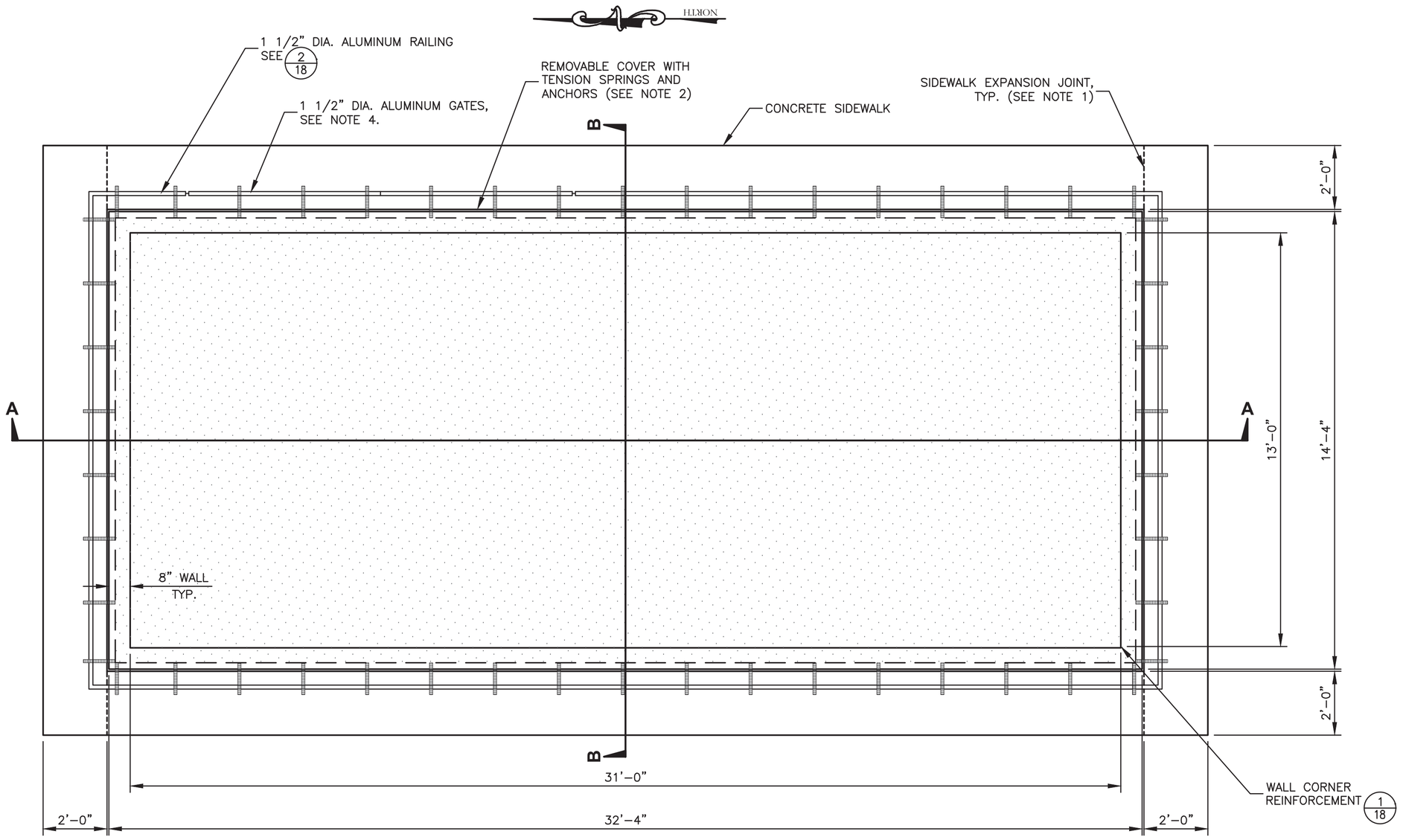

PLAN

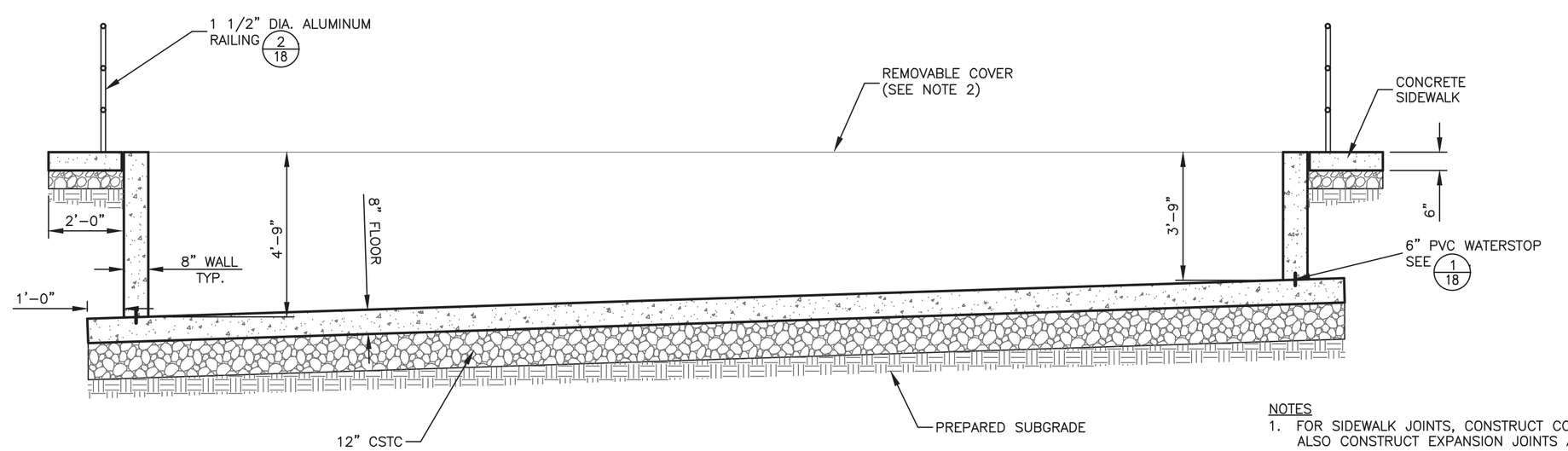

SECTION A-A

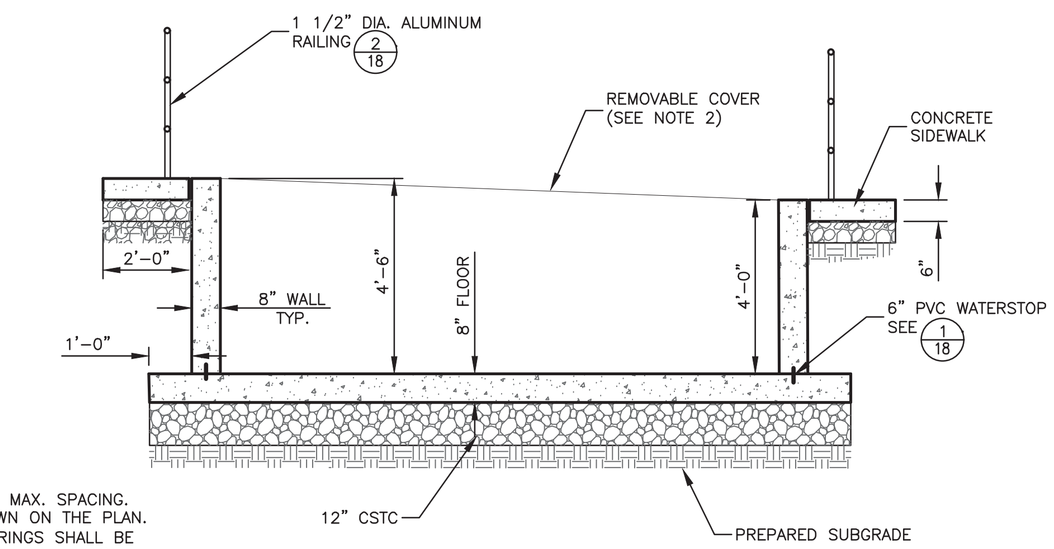

SECTION B-B

NOTES

1. FOR SIDEWALK JOINTS, CONSTRUCT CONTRACTION JOINTS 6' MAX. SPACING. ALSO CONSTRUCT EXPANSION JOINTS AT CORNERS AS SHOWN ON THE PLAN.
2. ALUMINUM RAILING POSTS AND COVER STRAPS/TENSION SPRINGS SHALL BE COORDINATED TO AVOID INTERFERENCE. SET DECK ANCHORS FOR TENSION SPRINGS FASTENERS ALONG INSIDE EDGE OF SIDEWALK. USE INDUSTRIAL GRADE COVER AND MANUFACTURER SUPPLIED ACCESSORIES. COVER SHALL BE HEAVY DUTY SOLID VINYL MATERIAL WITH A MINIMUM 15-YEAR WARRANTY. MANUFACTURER: COVERLOGIX, MODEL 1000V, GRAY WITH NO MESH DRAIN, OR APPROVED EQUAL. COVER SHALL BE POSITIONED SQUARE, EQUAL ON ALL SIDES, AND TAUGHT.
3. PROVIDE 120V REMOVABLE COVER PUMP (20-30 GPM) AS RECOMMENDED BY COVER MANUFACTURER.
4. PROVIDE 6' SWING GATES (X2) OF SAME DESIGN AND MATERIAL AS RAILING. GATE HARDWARE SHALL INCLUDE LOCKABLE LATCH AND HINGES THAT ALLOW GATE TO REMAIN IN OPEN POSITION WITHOUT PROTRUDING INTO ADJACENT ROAD. SUPPORT POSTS SHALL BE OF ADEQUATE SIZE TO SUPPORT GATES, AS RECOMMENDED BY MANUFACTURER.

1/17 EVAPORATION BASIN DETAIL

SCALE: 1" = 5'

NO.	REVISION DESCRIPTION	BY	DATE

PROJECT: 4-16108
DESIGNED: ML / TAP
DRAWN: ML / BAA
CHECKED: REC
APPROVED: TAP
DATE: MARCH 2017

GreatWest engineering®
3363 N. LAKEHARBOR LANE
BOISE, ID 83703
(208)676-6646

CAROTHERS ROAD SOLID WASTE FACILITY
CONTACT WATER AND FIRE SUPPRESSION WATER HOLDING TANKS PROJECT

EVAPORATION BASIN STRUCTURAL DETAILS

SHEET NO.
17
OF 18

F:\4-16108-Whitman Co Contact Water Tank Project\CADD 4-16108\Sheets\4-16108-17-Details.dwg

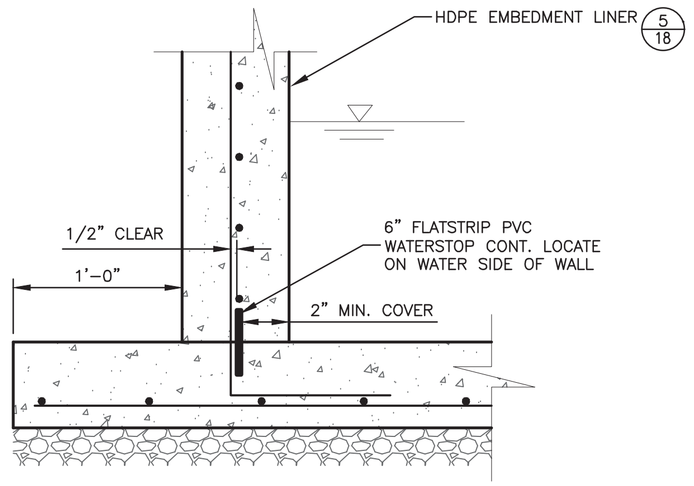

SINGLE MAT

NOTES:

1. WATERSTOP TO BE GREENSTREAK NO. 679 OR APPROVED EQUAL.
2. WATERSTOP TO BE CONTINUOUS W/ HEAT WELDED BUTT JOINTS.
3. APPLY TWO (2) COATS OF BOND BREAKER TO JOINT. DO NOT APPLY BOND BREAKER TO WATER STOP.

(1/18) SLAB TO WALL WATERSTOP

NOT TO SCALE

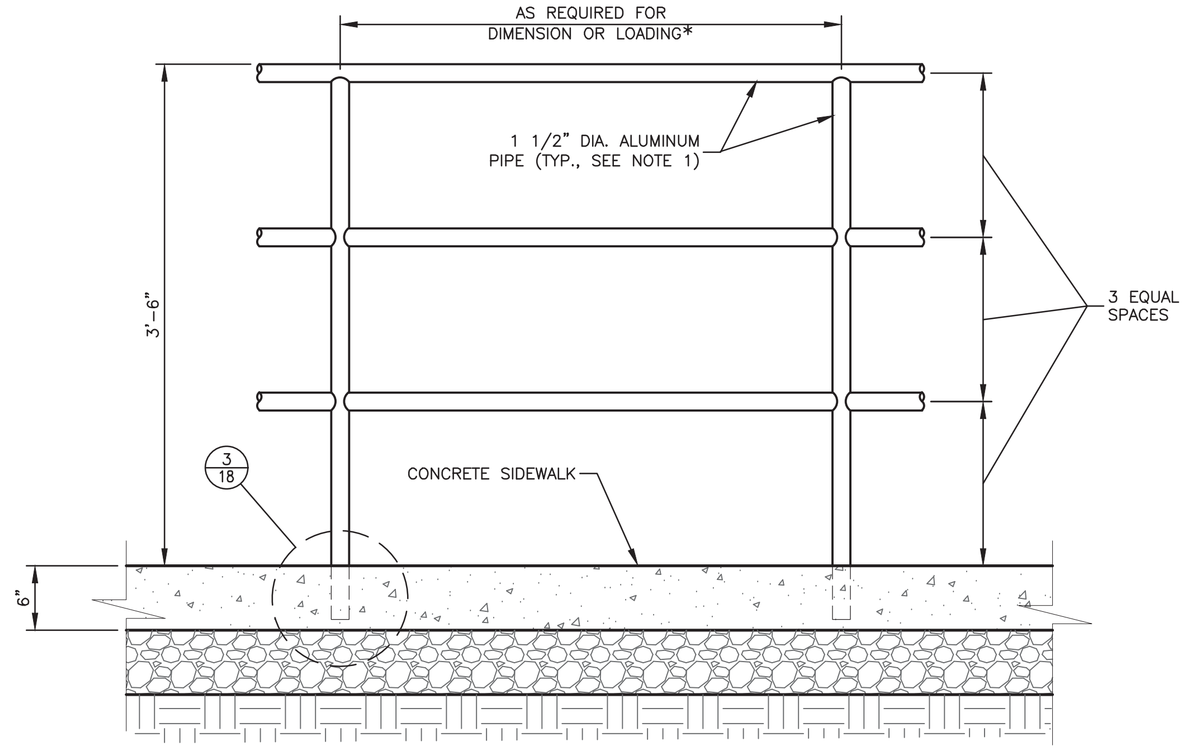

NOTES:

1. REFER TO SPEC SECTION 05521, PIPE AND TUBE RAILING.

(2/18) ALUMINUM RAILING DETAIL

NOT TO SCALE

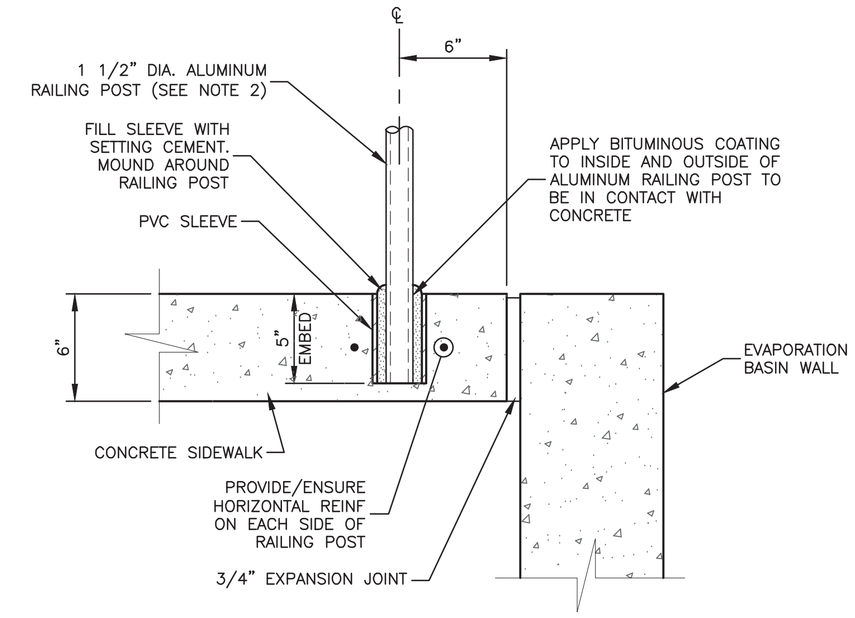

NOTES:

1. AT CONTRACTOR'S OPTION, RAILS MAY BE MECHANICALLY ATTACHED. ATTACHMENTS SHALL BE DESIGNED BY QUALIFIED PROFESSIONAL ENGINEER.
2. REFER TO SPEC SECTION 05521, PIPE AND TUBE RAILING.

(3/18) RAILING ANCHORAGE DETAIL

NOT TO SCALE

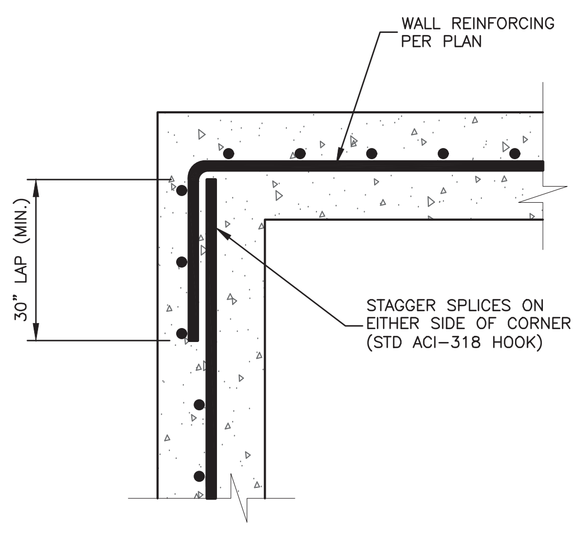

(4/18) WALL CORNER REINFORCEMENT

NOT TO SCALE

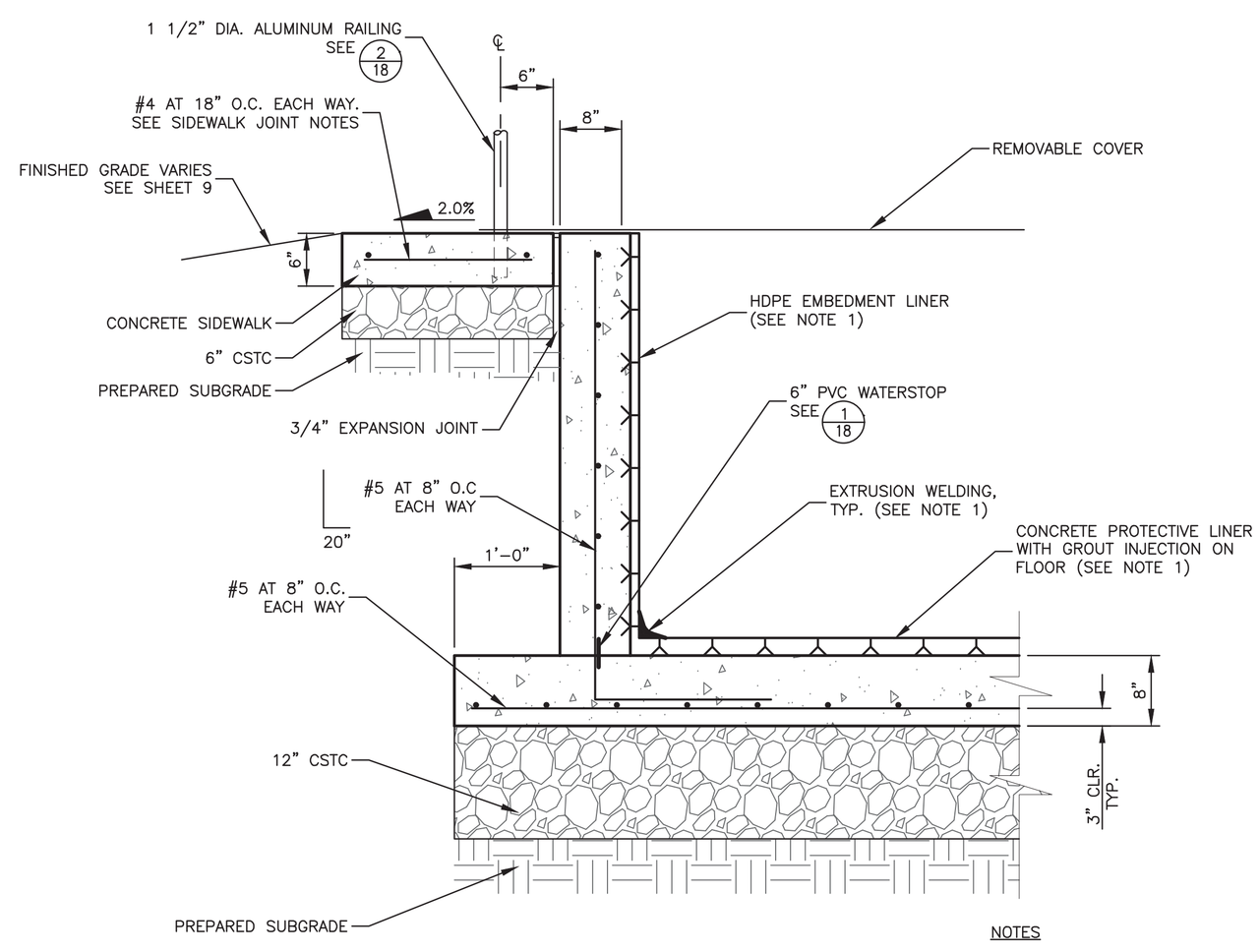

NOTES

1. REFER TO SPEC SECTION 02644, HDPE EMBEDMENT LINER

(5/18) EVAPORATION BASIN DETAIL SECTION

NOT TO SCALE

NO.	REVISION DESCRIPTION	BY	DATE

PROJECT: 4-16108
DESIGNED: ML / TAP
DRAWN: ML / BAA
CHECKED: REC
APPROVED: TAP
DATE: MARCH 2017

STATE OF WASHINGTON — PRESTON A. PYLE — 43836 — REGISTERED PROFESSIONAL ENGINEER

GreatWest engineering®
3363 N. LAKEHARBOR LANE
BOISE, ID 83703
(208)576-6646

CAROTHERS ROAD SOLID WASTE FACILITY
CONTACT WATER AND FIRE SUPPRESSION WATER HOLDING TANKS PROJECT

EVAPORATION BASIN STRUCTURAL DETAILS

SHEET NO.
18
OF 18

F:\4-16108-Whitman Co Contact Water Tank Project\CADD 4-16108\Sheets\4-16108-18-Details.dwg